STAEDTLER® No. 937 811E Engineer's Computation Pad

SENSING AND ESTIMATION

- OBVIOUSLY VARIOUS SENSING OPTIONS

  POSITION - GPS, METROLOGY, VISION

  VELOCITY - GEOPHONE

  ACCEL - ACCELEROMETER

  ATTITUDE - MAGNETIC COMPASS, GYROSCOPE
  HORIZON SENSOR

  ATT RATE - RATE GYRO

- FOR EACH TYPE THERE ARE MANY OPTIONS
  - INERTIAL GYROS
  - INTERFEROMETRIC GYROS
  - RING LASER GYROS

  ⋮

⇒ BROAD SPECTRUM OF COSTS AND CAPABILITIES

⇒ STUDY THE SPEC SHEETS WELL TO MAKE SURE THAT IT MEETS ALL CRITERIA WITH EXCEEDING BY TOO MUCH.

STAEDTLER® No. 937 811E Engineer's Computation Pad

- TYPICAL ISSUES
  - LINEARITY – NL SENSORS IMPACT FEEDBACK GAIN ⇒ COULD BE A PROBLEM
  - BIAS – OUTPUT WHEN INPUT IS ZERO
    - TYPICAL VARIES SLOWLY IN INERTIAL SENSORS ⇒ DRIFT
    - CAN BE CALIBRATED OUT
    - BIG PROBLEM WHEN INTEGRATED.
  - ACCURACY – OR INACCURACY
    - MEASURE OF MAX DEVIATION FROM TRUE OUTPUT VALUE
    - INCLUDES ALL SOURCES OF ERROR
    - IF SYSTEMATIC, CAN CALIBRATE OUT, BUT NEED AN ACCURATE TRUTH
  - BANDWIDTH – MOST PHYSICAL DEVICES HAVE A LIMIT TO THE FREQUENCY AT WHICH THEY CAN PROVIDE GOOD MEASUREMENTS

VISION: LIMITED BY PROCESSOR SPEED

ACCEL: ACCELERATION $\ddot{y}$ → SENSOR OUTPUT y

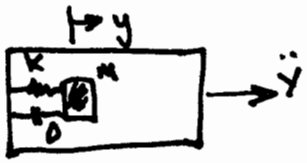

$$\frac{y}{\ddot{y}} = \frac{1}{Ms^2 + Ds + K}$$

STAEDTLER® No. 937 811E Engineer's Computation Pad

COMPLEMENTARY FILTERING

- TYPICAL SENSING PROBLEM: HAVE TWO SEPARATE MEASUREMENTS y_1 AND y_2 OF THE VARIABLE x

$$\left.\begin{aligned} y_1 &= x + n_1 \\ y_2 &= x + n_2 \end{aligned}\right\}$$

KEY POINT IS THAT n_1 AND n_2 HAVE DIFFENT PROPERTIES

E.G. COULD HAVE n_1 NARROWBAND
n_2 WIDEBAND

- HOW COMBINE y_1 AND y_2 TO OBTAIN THE BEST "SUPERSENSOR"?

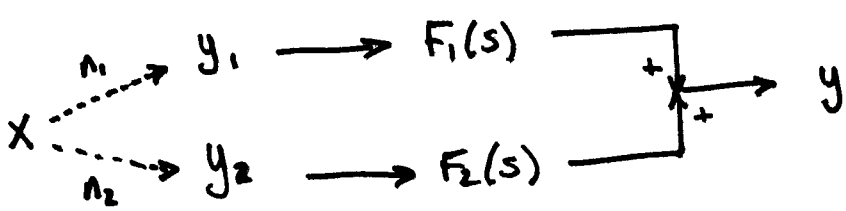

CHOOSE $F_1(s) + F_2(s) = 1$

$\lim_{s \to 0} F_1(s) = 0 \Rightarrow F_1 \sim$ HIGH PASS 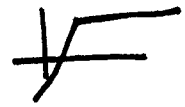

$\lim_{s \to \infty} F_2(s) = 0$ $F_2 \sim$ LOW PASS

STAEDTLER® No. 937 811E Engineer's Computation Pad

THIS GIVES

$$y = F_1(x + n_1) + F_2(x + n_2)$$
$$= (F_1 + F_2)x + F_1 n_1 + F_2 n_2$$

$$\therefore \; y = x + (1 - F_2) n_1 + F_2 n_2$$

- IF n_1 IS A LOW FREQ NARROW BAND SIGNAL IT IS ATTENUATED BY $(1-F_2)$ [HP]
- AND n_2 ATTENUATED AT HIGH FREQUENCY BY F_2 [LP]

CALLED <u>COMPLEMENTARY</u> <u>FILTERING</u> OR <u>AIDING</u>.

$\Rightarrow$ KEY IS CHOOSING THE CROSS-OVER FREQUENCY OF WHEN TO SWITCH FROM y_1 TO y_2.

STAEDTLER® No. 937 811E Engineer's Computation Pad

- CAN EXTEND THIS TO THE CASE WITH A COMBINATION OF A POSITION AND VELOCITY SENSOR

$$y_1 = x + n_1$$

$$y_2 = \dot{x} + n_2 \quad \rightarrow \quad y_3 = \text{"}\int y_2\text{"} = x + \frac{1}{s} n_2$$

SO NOW THE SENSORS HAVE VERY DIFFERENT NOISE SPECTRA

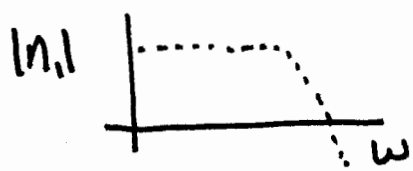

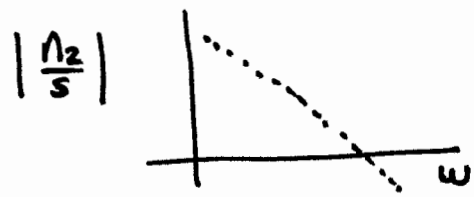

$\Rightarrow$ SHOULD USE y_1 AT LOW FREQ, SWITCHING OVER TO y_2

- TRY $\quad y = F_1(x + n_1) + F_2(\dot{x} + n_2)$

$$= (F_1 + sF_2)x + F_1 n_1 + F_2 n_2$$

WITH $\quad F_1 + sF_2 = 1$

SET $\quad F_1 \sim LP \Rightarrow F_1 = \frac{\alpha}{s+\alpha} \Rightarrow F_2 = \frac{1}{s}(1 - F_1)$

$$= \frac{1}{s+\alpha}$$

$$= \frac{1}{s}\frac{s}{\alpha+s}$$

$\therefore \; F_2 n_2 = \frac{s}{s+\alpha} \cdot \left(\frac{n_2}{s}\right) \Rightarrow$ HP ON LF NOISE

STAEDTLER® No. 937 811E Engineer's Computation Pad

ESTIMATION

- GIVEN THE MEASUREMENTS, CAN THEN FOCUS ON EXTRACTING THE INFORMATION

  $\Rightarrow$ FILTERING PROBLEM.

- SIMPLEST FORM OF FILTERING : AVERAGE.
  - MULTIPLE MEASURES OF $x \Rightarrow y_i = x + v_i$

$$y_i = x + v_i \Rightarrow \quad y = Hx + v \quad \text{(M TIMES)}$$

$$H = [1 \; 1 \; \dots \; 1]^T$$

"GIVEN Y SOLVE FOR X" $\Rightarrow$ LEAST-SQUARES PROBLEM

$$\hat{x} = (H^T H)^{-1} H^T y \qquad [\text{IGNORE } v]$$

BUT $H^T H = M$

$H^T y = \sum_i y_i$

$$\therefore \quad \hat{x} = \frac{1}{M} \sum_i y_i$$

- STATIC CASES ARE INTERESTING, BUT TYPICALLY WE ARE TRYING TO ESTIMATE A DYNAMIC VARIABLE - E.G. THE STATE OF YOUR UAV

  $\Rightarrow$ MODEL $\dot{x} = Ax + Bu$

  WANT TO ESTIMATE $x \; \forall t \Rightarrow \hat{x}(t)$.

ESTIMATION SCHEMES

① KNOW THE PLANT MATRICES AND THE INPUTS, WE COULD JUST PERFORM A (DIGITAL OR ANALOG) SIMULATION

$$\dot{\hat{x}} = A\hat{x} + Bu$$

THEN $\hat{x}(t) = x(t)$ $\forall t$ PROVIDED $\hat{x}(0) = x_0$

- BUT WE DO NOT KNOW x_0 !!
- PROCESS SENSITIVE TO KNOWLEDGE OF A, B

$\Rightarrow$ CALLED AN <u>OPEN-LOOP ESTIMATOR.</u>

- <u>ANALYSIS</u> OF THIS CASE:

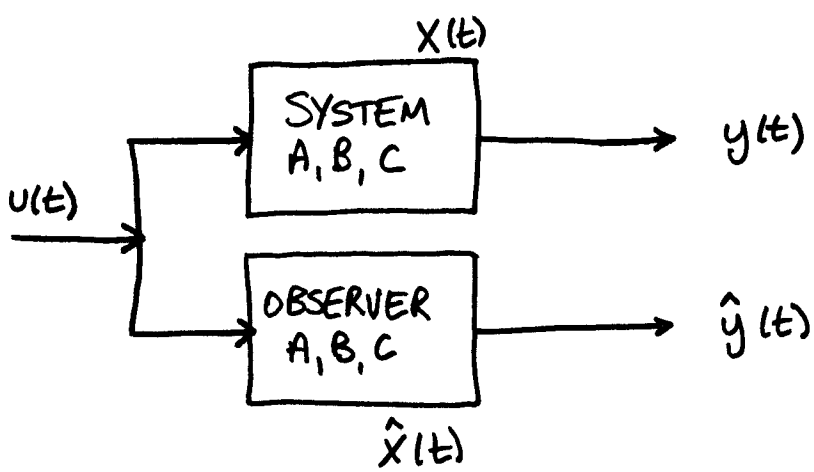

$$\dot{x} = Ax + Bu$$
$$\dot{\hat{x}} = A\hat{x} + Bu$$

<u>ERROR</u> $\tilde{x} = x - \hat{x}$

<u>SUBTRACT:</u> $\dot{(x - \hat{x})} = A(x - \hat{x})$

OR $\dot{\tilde{x}} = A\tilde{x} \Rightarrow \tilde{x}(t) = e^{At}\tilde{x}(0)$

→ ESTIMATION ERROR $\tilde{x}(t)$ IN TERMS OF INITIAL ERROR $\tilde{x}(0)$.

- DOES THIS GUARANTEE $\tilde{x}(t) = 0 \ \forall t$?
  OR EVEN $\tilde{x}(t) \to 0$ AS $t \to \infty$?

  - O.K. IF $\tilde{x}(0) = 0$
  - WHAT IF $\tilde{x}(0) \neq 0$
    A STABLE ?
    A UNSTABLE ? YIKES

- IF A STABLE, $\tilde{x}(t) \to 0$, BUT THE DYNAMICS OF THE ESTIMATION ERROR ARE THE SAME AS THE ORIGINAL SYSTEM (A, "OPEN-LOOP")

  - COULD BE SLOW
  - NO OBVIOUS WAY TO MODIFY THE ESTIMATION ERROR DYNAMICS.

(2) USE ADDITIONAL INFORMATION, WHICH IS HOW WELL OUR ESTIMATED OUTPUT TRACKS THE MEASURED OUTPUT

WANT THIS $\simeq 0$

$\therefore$ COMPARE $\hat{y} = C\hat{x}$ $\quad \tilde{y} = y - \hat{y}$

$y = Cx$ $\quad = C\tilde{x}$

⇒ FEEDBACK $\tilde{y}$ TO IMPROVE OUR ESTIMATE.

- SELECTED FORM :

$$\dot{\hat{x}} = A\hat{x} + Bu + L\tilde{y}$$

SELECTABLE GAIN L

SETUP :

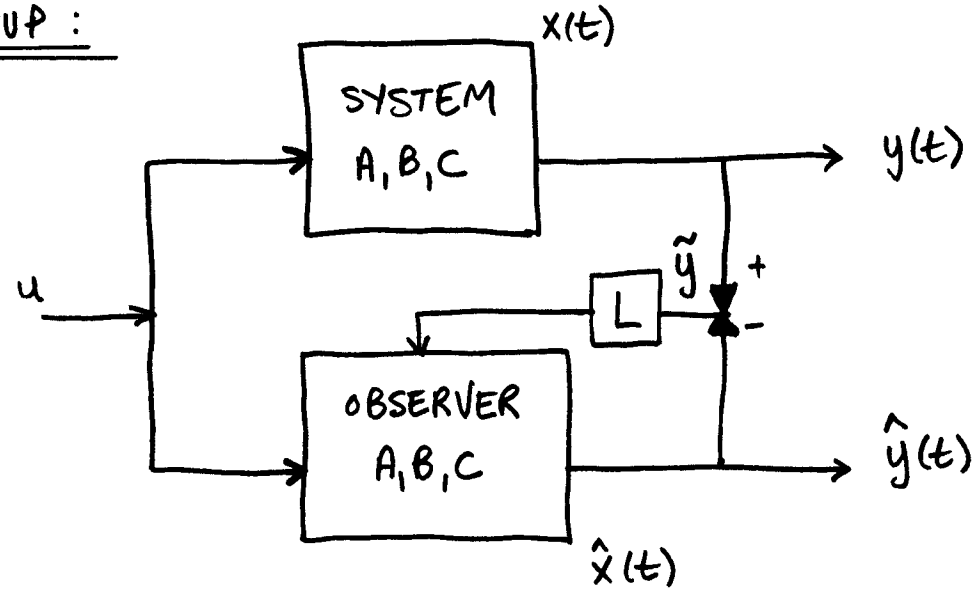

⇒ USE KNOWLEDGE OF MEASURABLE DIFFERENCE IN THE OUTPUTS ($\tilde{y} \neq 0$) TO "CLOSE THE LOOP" ON THE ESTIMATOR.

- ANALYSIS :

$$\dot{\tilde{x}} = \dot{x} - \dot{\hat{x}} = \left[Ax + Bu\right] - \left[A\hat{x} + Bu + L(y - \hat{y})\right]$$

$$= A(x - \hat{x}) - L(Cx - C\hat{x})$$

$$= A\tilde{x} - LC(x - \hat{x}) = (A - LC)\tilde{x}$$

⇒ NEW ESTIMATION ERROR DYNAMICS

$$\dot{\tilde{x}} = (A - LC)\tilde{x}$$

CLOSED-LOOP ESTIMATOR

$$\tilde{x}(t) = e^{(A-LC)t}\tilde{x}(0)$$

- ESTIMATION ERROR DYNAMICS ARE GOVERNED BY THE MATRIX $(A-LC)$
  - CAN CHOOSE L TO MAKE $\tilde{x} \to 0$ QUICKLY, OR CAN WE ?

- NOTE SIMILARITY
  1. <u>REGULATOR PROBLEM</u> : PICK K FOR $A-BK$
  2. <u>ESTIMATION PROBLEM</u> : PICK L FOR $A-LC$

1. CHOOSE $K \in R^{1\times n}$ (SISO) SUCH THAT

$$\det(sI - A + BK) = \alpha_c(s)$$

DESIRED LOCATION OF REGULATOR POLES

2. CHOOSE $L \in R^{n\times 1}$ (SISO) SUCH THAT

$$\det(sI - A + LC) = \alpha_o(s)$$

- THESE TWO PROBLEMS ARE <u>DUAL</u>

FREQUENCY DOMAIN INTERPRETATION

- ESTIMATION ERROR DYNAMICS

$$\dot{x} = Ax + B_u u + B_w w$$
$$y = C_y x + v$$

$w \sim N(0, R_w)$ $\quad B_w R_w B_w^T > 0$ $\quad [A, C_y]$ OBSERVABLE

$v \sim N(0, R_v)$ $\quad R_v > 0$

$\Rightarrow$ STRONG FORM OF ASSUMPTIONS

$\Rightarrow$ STEADY STATE KALMAN FILTER

$$\dot{\hat{x}} = A\hat{x} + B_u u + L(y - C_y \hat{x})$$

- GIVING ESTIMATION ERROR DYNAMICS:

$$\dot{\tilde{x}} = \dot{x} - \dot{\hat{x}} = Ax + \cancel{B_u u} + B_w w - \{(A - LC_y)\hat{x} + \cancel{B_u u} + L(C_y x \quad)\}$$
$$= (A - LC_y)\tilde{x} + B_w w + Lv$$

1) FILTER STABILITY GOVERNED BY $\lambda_i(A - LC_y)$

2) EQUATION MAKES EXPLICIT THE CONFLICT BETWEEN
   (A) SPEED OF ESTIMATOR ERROR DECAY ($L\uparrow$ SO $\lambda_i(A-LC)$ FAR INTO LHP)
   (B) SUSCEPTIBILITY OF ESTIMATION ERROR BEING CORRUPTED BY SENSOR NOISE.

- KALMAN FILTER SELECTS THE <u>OPTIMAL</u> <u>BALANCE</u> BETWEEN THESE TWO GOALS.

- HAVE $\dot{\hat{x}} = A\hat{x} + L(y - C_y\hat{x})$ STEADY STATE FILTER

LAPLACE TF BOTH SIDES

$$\Rightarrow \quad \frac{\hat{X}(s)}{Y(s)} = \frac{L}{sI - A + LC_y}$$

- THIS IS THE TRANSFER FUNCTION OF THE <u>FILTER</u> APPLIED TO THE MEASUREMENTS TO FORM THE ESTIMATE $\hat{x}$. (LOW PASS)

- INCREASING L PUSHES FILTER TF UP/OUT

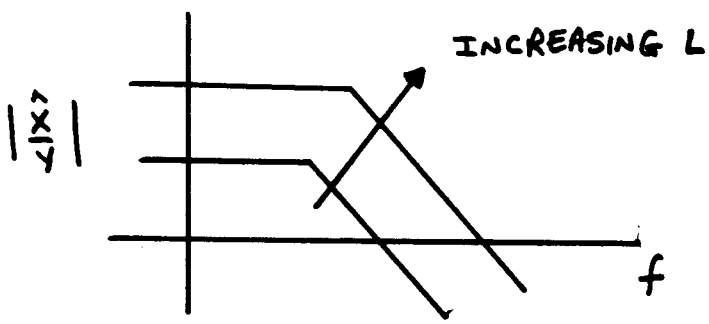

$\Rightarrow$ EVENTUALLY ESTIMATE WOULD BE TOO CORRUPTED BY THE NOISE IN THE MEASUREMENTS

- NOTE THAT BALANCING OF SENSOR NOISE IMPACT DONE WITH RESPECT TO PROCESS NOISE ($B_w w$).

$\Rightarrow$ TURNS OUT THAT RATIO $\frac{R_w}{R_v}$ PLAYS A KEY ROLE IN SELECTION OF L.