Unit M1.5-*Example*
Statically Indeterminate Systems-- AN EXAMPLE (Handout - #M-3)

Readings:

CDL 2.1, 2.3, 2.4, 2.7

16.001/002 -- *"Unified Engineering"*
Department of Aeronautics and Astronautics
Massachusetts Institute of Technology

Look at another example and consider, more generally……

Deflection of Trusses:

Figure M1.5-13 **Example of three-bar truss**

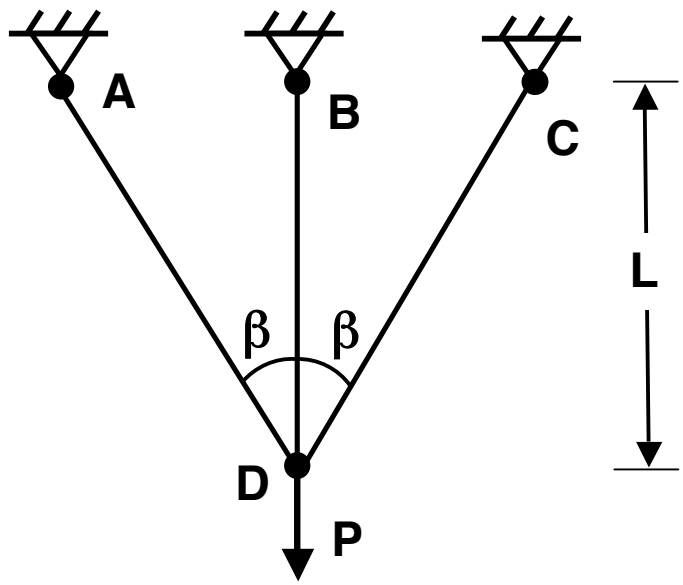

All bars are of same material (E) and area (A)

First…..

Figure M1.5-14 **Draw the Free Body Diagram for the truss**

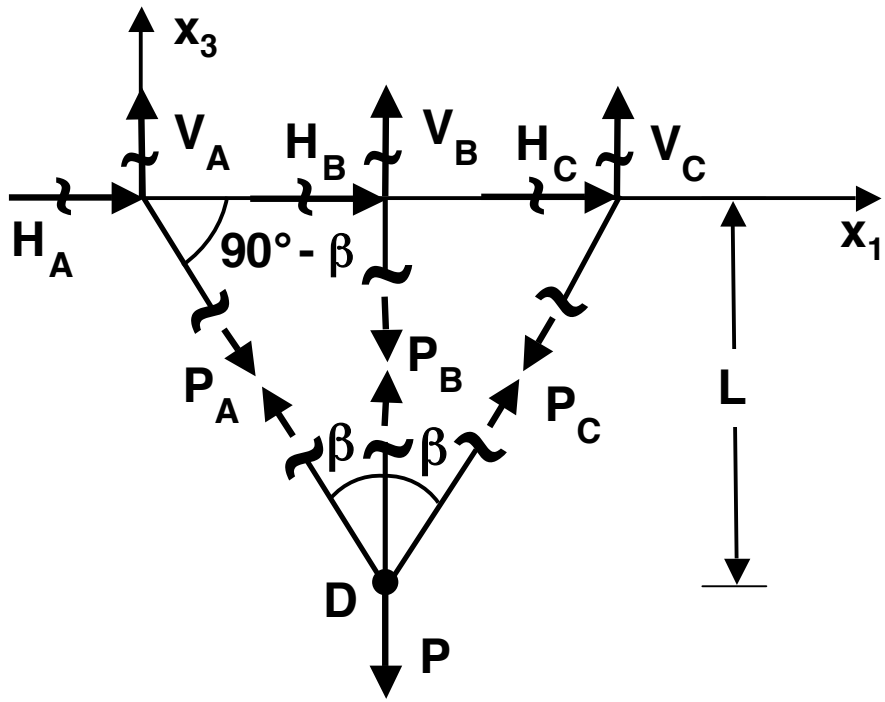

Now apply the approach

--> Step 1: Apply equilibrium

At all the support points:

<u>at</u> <u>A</u>:

$$\sum F_H = 0 \xrightarrow{+} \Rightarrow H_A + P_A \cos(90-\beta) = 0$$

$$\Rightarrow H_A = -P_A \cos(90-\beta)$$

$$\sum F_V = 0 \uparrow + \Rightarrow V_A - P_A \sin(90-\beta) = 0$$

$$\Rightarrow V_A = P_A \sin(90-\beta)$$

<u>at</u> <u>B</u>:

$$\sum F_H = 0 \xrightarrow{+} \Rightarrow H_B = 0$$

$$\sum F_V = 0 \uparrow + \Rightarrow V_B - P_B = 0$$

$$\Rightarrow V_B = P_B$$

<u>at</u> <u>C</u>:

$$\sum F_H = 0 \xrightarrow{+} \Rightarrow H_C - P_C \cos(90-\beta) = 0$$

$$\Rightarrow H_C = P_C \cos(90-\beta)$$

$$\sum F_V = 0 \uparrow + \Rightarrow V_C - P_C \sin(90-\beta) = 0$$

$$\Rightarrow V_C = P_C \sin(90-\beta)$$

--> We get all reactions once we know the loads in the bars (P_A, P_B, P_C)

This tells us the reactions are equal to the loads in the bars (in magnitude and direction)

Proceed to consideration of the cut-off section

Figure M1.5-15 **Free Body Diagram of cut-off section**

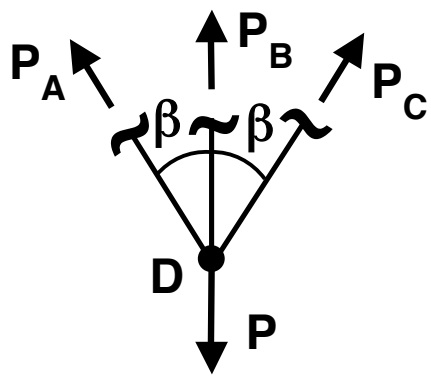

Again apply equilibrium:

$$\sum F_H = 0 \xrightarrow{+} \Rightarrow -P_A \sin\beta + P_C \sin\beta = 0$$

$$\Rightarrow P_A = P_C \qquad (1)$$

$$\sum F_V = 0 \uparrow + \quad \Rightarrow \quad P_A \cos\beta + P_B + P_C \cos\beta - P = 0 \qquad (2)$$

using (1):

$$2P_C \cos\beta + P_B = P \qquad (2^*)$$

We have 2 equations in 3 unknowns (P_A, P_B, P_C)

So go to:

--> <u>Step 2</u>: Determine constitutive relations

We have bars, so from before recall:

$$\delta = \frac{PL}{AE} + \alpha \Delta T L$$

$\Delta T = 0$ here so

$$\Rightarrow \delta = \frac{PL}{AE}$$

For bars A and C, length $= \dfrac{L}{\cos\beta}$

The bars are of the same material and cross-sectional area, so AE is a constant.

Thus:

$$\delta_A = \frac{P_A L}{AE\cos\beta} \qquad (3)$$

$$\delta_B = \frac{P_B L}{AE} \qquad (4)$$

$$\delta_C = \frac{P_C L}{AE\cos\beta} \qquad (5)$$

This gives us 5 equations in 6 unknowns (P_A, P_B, P_C, δ_A, δ_B, δ_C)

We now go to:

--> <u>Step 3</u>: Enforce compatibility of displacements

From the compatibility example done earlier….. *(zeroeth order solution)*

Figure M1.5-16 **Illustration of displacement at point D (magnified)**

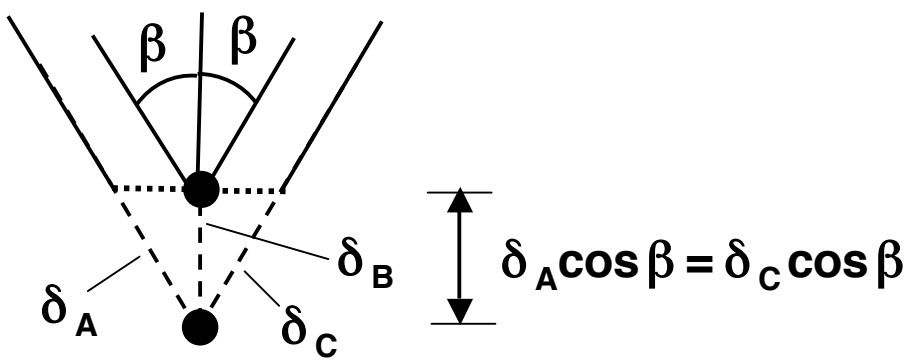

We know:

$$\delta_A \cos\beta = \delta_B = \delta_C \cos\beta$$

This really represents two conditions:

$$\delta_A = \frac{\delta_B}{\cos\beta} \qquad (6)$$

$$\delta_C = \frac{\delta_B}{\cos\beta} \qquad (7)$$

With these two extra equations, we now have 7 equations in 6 unknowns (enough to solve, but one equation must be repetitive).

so finally….

--> <u>Step 4</u>: Solve the simultaneous equations

Equations (6) and (7) tell us:

$$\delta_A = \delta_C = \delta_B / \cos\beta$$

Using this in equations (3), (4) and (5) gives:

$$\delta_B / \cos\beta = \frac{P_A L}{AE\cos\beta} \qquad (3^*)$$

$$\delta_B = \frac{P_B L}{AE} \qquad (4^*)$$

$$\delta_B / \cos\beta = \frac{P_C L}{AE\cos\beta} \qquad (5^*)$$

Note that equations (3*) and (5*) tell us $P_A = P_C$

(redundant from equation (1)!)

Now use equations (4*) and (5*) in these forms:

$$P_B = \frac{AE\delta_B}{L} = P_C = P_A$$

and in equation (2):

$$2AE\cos\beta\,\frac{\delta\beta}{L} + AE\,\frac{\delta\beta}{L} = P$$

$$\Rightarrow \boxed{\delta_B = \frac{PL}{AE}\,\frac{1}{1 + 2\cos\beta}}$$ deflection of point D

Use this in equation (3*), (4*), and (5*) to get:

$$\boxed{\begin{aligned} P_A &= P_C = \frac{P}{1 + 2\cos\beta} \\ P_B &= \frac{P}{1 + 2\cos\beta} \end{aligned}}$$

Finally,

$$\boxed{\delta_A = \delta_C = \frac{PL}{AE}\,\frac{1/\cos\beta}{1 + 2\cos^3\beta}}$$

<u>check</u> <u>units</u>

$$\frac{[N]\,[m]}{[m^2]\,[N/m^2]} = [m] \quad \surd \quad \textit{units of deflection}$$

Final note of the deflection for this example (and truss in general)
Rotation is actually composed of extension and slight rotation.

Figure M1.5-17 **Illustration of displacement at point D with magnified angle change noted**

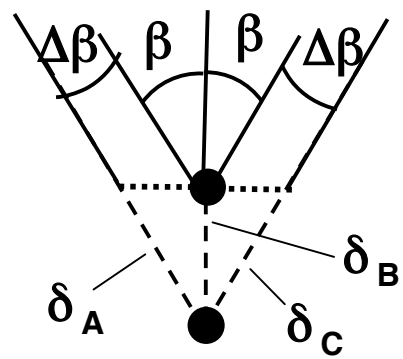

As before, must ignore small angle changes (assume deformations are small)

CONSISTENT