Lect # 6

Note Title 10/26/2008

Next:

- Introduction to the Mesh-Current Method
- The Mesh Current Method and Dependent sources
- The Node Current Method: Some Special Cases

Objectives:

Understand and be able to use mesh-current method to solve a circuit.

Be able to decide weather the node-voltage method or mesh-current method

▫ The Mesh Current Method.

- The dual of the node voltage method
- Use KVL equations around meshes
- solve directly for currents

- Find the power associated with the voltage source and 8 Ω resistor, using the mesh current method.

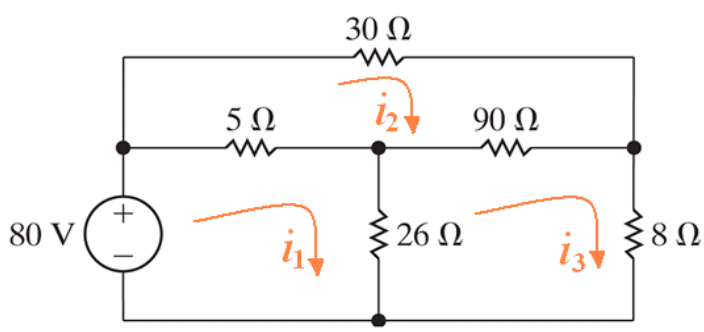

- KVL equations:

i mesh : $-80 + 5(i_1 - i_2) + 26(i_1 - i_3) = 0$

i_2 mesh : $30 i_2 + 90(i_2 - i_3) + 5(i_2 - i_1) = 0$

i_3 mesh : $8 i_3 + 26(i_3 - i_1) + 90(i_3 - i_2) = 0$

- Standard Forms:

$$i_1(5+26) + i_2(-5) + i_3(-26) = 80$$

$$i_1(-5) + i_2(30+90+5) + i_3(-90) = 0$$

$$i_1(-26) + i_2(-90) + i_3(8+26+90) = 0$$

$$\Rightarrow \quad i_1 = 5\ A$$

$$i_2 = 2\ A$$

$$i_3 = 2.5\ A$$

– Power balance

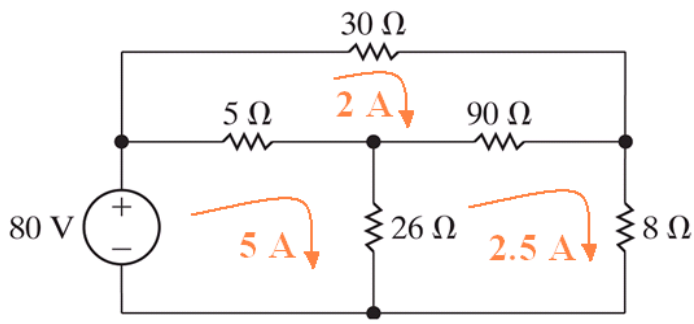

Component	Equation	p [W]
80 V	$-(5)(80)$	-400
5 Ω	$(5-2)^2(5)$	45
90 Ω	$(2.5-2)^2(90)$	22.5
30 Ω	$(2)^2(30)$	120
26 Ω	$(5-2.5)^2(26)$	162.5
8 Ω	$(2.5)^2(8)$	50

- Mesh current method with dependent source

Find v_o using the mesh current method

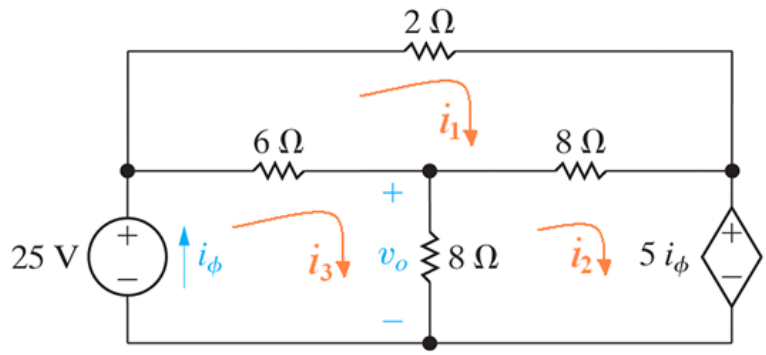

KVL equations:

i_1 mesh: $2i_1 + 8(i_1 - i_2) + 6(i_1 - i_3) = 0$

i_2 mesh: $5i_\phi + 8(i_2 - i_3) + 8(i_2 - i_1) = 0$

i_3 mesh: $-25 + 6(i_3 - i_1) + 8(i_3 - i_2) = 0$

constraint equation: $i_\phi = i_3$

Standard Form

$$i_1(2+6+8) + i_2(-8) + i_3(-6) = 0$$

$$i_1(-8) + i_2(8+8) + i_3(5-8) = 0$$

$$i_1(-6) + i_2(-8) + i_3(6+8) = 25$$

$$\Rightarrow \quad i_1 = 2.5\ A$$

$$i_2 = 2\ A$$

$$i_3 = i_\phi = 4\ A$$

- Power balance

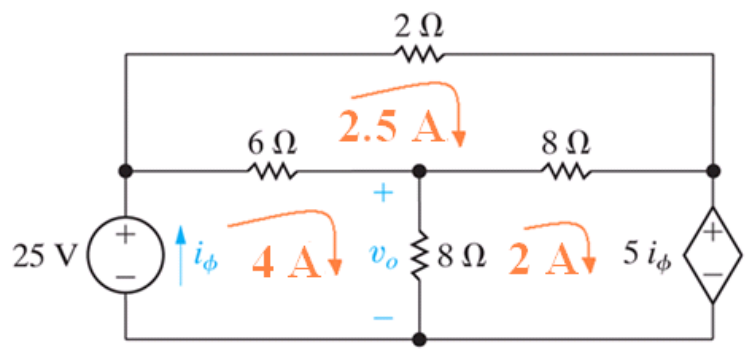

Component	Equation	p [W]
25 V	$-(4)(25)$	-100
Dep. source	$(2)[5(4)]$	40
6 Ω	$(4-2.5)^2(6)$	13.5
2 Ω	$(2.5)^2(2)$	12.5
8 Ω (middle)	$(4-2)^2(8)$	32
8 Ω (right)	$(2-2.5)^2(8)$	2

- Mesh current method with current source on the perimeter of a mesh

Find i_a using the mesh current method

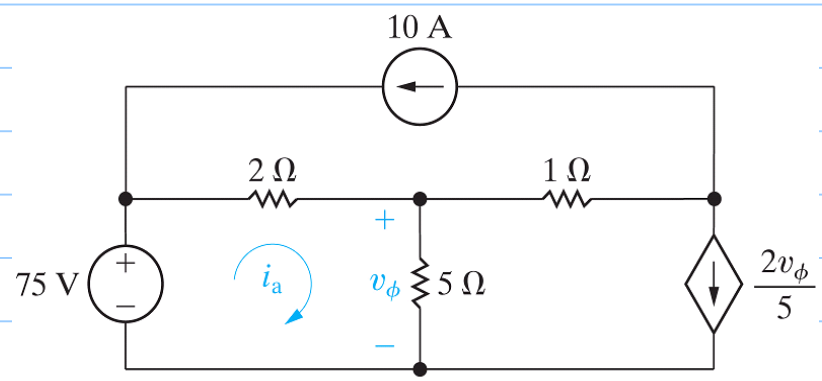

If there are current sources on the perimeter of a mesh, then label the mesh currents with the values of the current sources

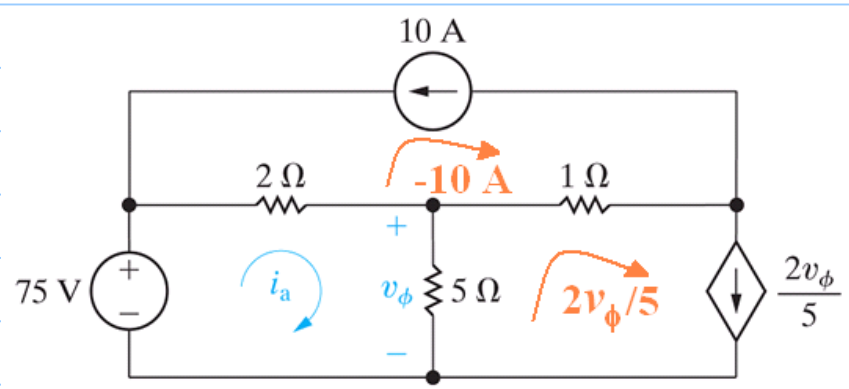

KVL for i_a mesh:

$$-75 + 2(i_a - (-10)) + 5\left(i_a - \frac{2}{5} v_\phi\right) = 0$$

Constraint:

$$v_\phi = 5\left(i_a - \frac{2}{5} v_\phi\right)$$

Standard form

$$i_a(2+5) + v_\phi(-2) = 75 - 20$$

$$i_a(5) + v_\phi(-2-1) = 0$$

$$\Rightarrow \quad i_a = 15\text{ A}$$

$$v_\phi = 25\text{ V}$$

– Power balance

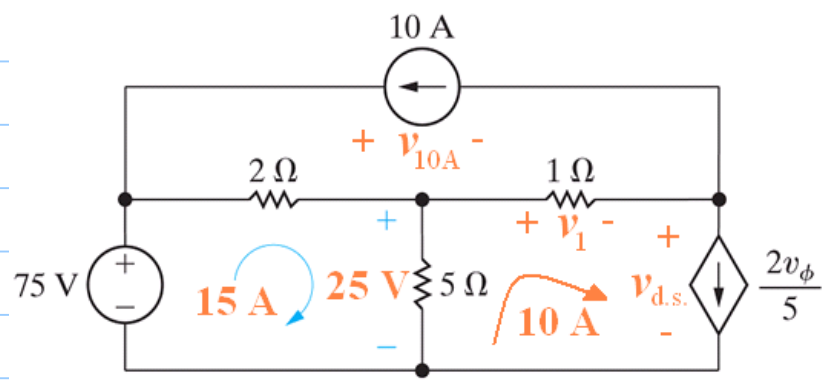

$v_1 = (10+10)\,1 = 20\ V$

$v_{ds} = v_\phi - v_1 = 25 - 20 = 5\ V$

$v_{10A} = -v_{ds} + 75 = -5 + 75 = 70\ V$

Component	Equation	p [W]
75 V	–(15)(75)	–1125
Dep. source	(5)(10)	50
10 A	–(70)(10)	–700
2 Ω	$(15+10)^2(2)$	1250
1 Ω	$(10+10)^2(1)$	400
5 Ω	$25^2/5$	125