2.032 DYNAMICS Fall 2014

Problem Set No. 2

Out: Wednesday, September 10, 2014

The homework problems are for practice only. Solutions are posted in a separate file. Please work on the problems and be prepared to ask questions related to this homework in the recitation of September 16, 2014 (4:00–5:30pm in Room 5-233).

Problem 1

A pendulum consists of a rod of length L with a frictionless pivot at one end. The pendulum is suspended from a flywheel of radius R which rotates with fixed angular velocity ω, as shown below.

(a) Determine the angular velocity of the rod in terms of ω and the generalized coordinate θ indicated in the sketch

(b) Calculate the velocity of the mid point C of the rod

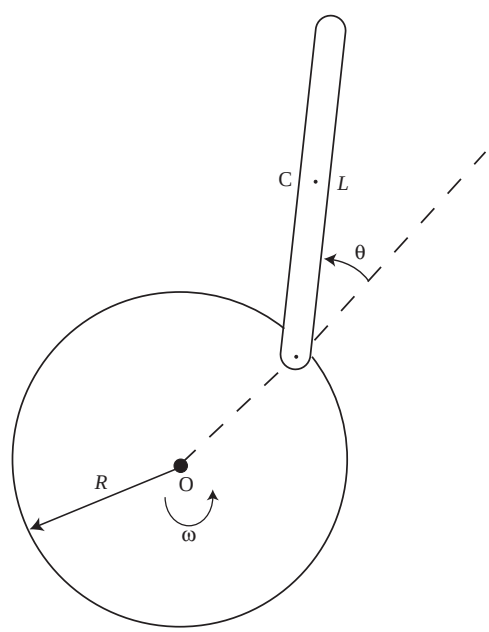

Problem 2

A ring of radius R is pivoted without friction at O. A disk of radius r rolls without slipping inside the ring, as shown below. Determine the angular velocities of the ring and the disk in terms of the generalized coordinates θ, ϕ indicated.

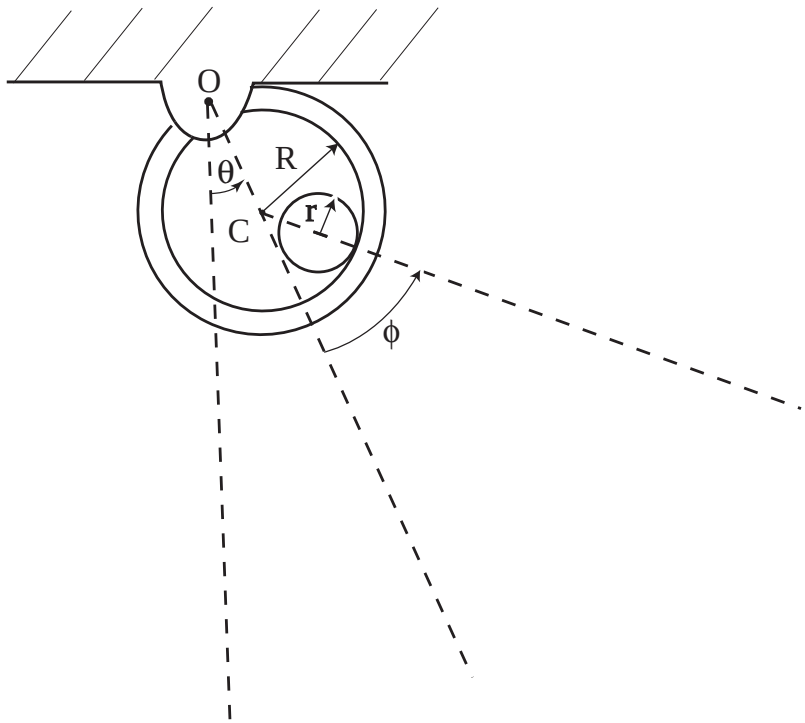

Problem 3 (adapted from Doctoral Qualifying Exam 2002)

In the system sketched below, the rigid cylinder of radius R is moving to the right such that its center C has velocity v. There is no slipping between the cylinder and the bar BD, but there is slipping between the cylinder and the ground. In the position shown,

(a) Determine the angular velocity of the bar BD

(b) Determine the velocity of the cylinder at the point where it contacts the ground.

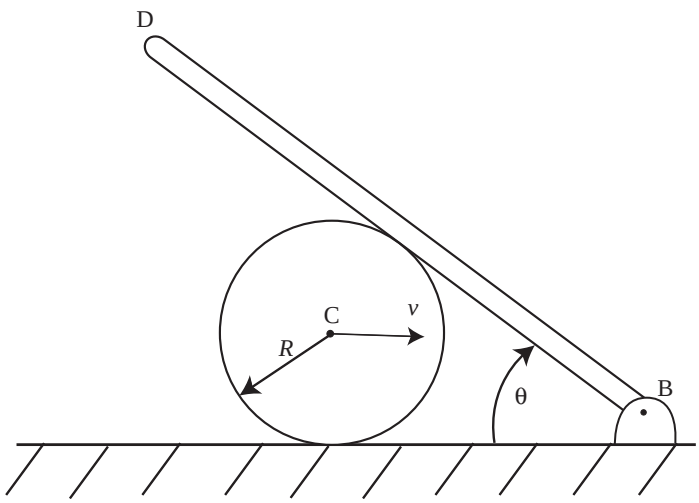

Problem 4 (adapted from Ginsberg, 3-22)

The disk rotates at ω_1 about its axis, and the rotation rate of the forked shaft is ω_2. Both rates are constant. Determine the velocity and acceleration of an arbitrarily selected point B on the perimeter. Describe the results in terms of components relative to the xyz axes in the sketch.