Massachusetts Institute of Technology
Department of Electrical Engineering and Computer Science

6.002 – Circuits & Electronics
Spring 2004

Problem Set #2

Issued 2/11/04 – Due 2/18/04

Exercise 2.1: In each circuit shown below, three light bulbs are driven by a single source. In two of the circuits the source is a voltage source, and in the other it is a current source. Assume that one of the three light bulbs burns out and becomes an open circuit. Do the other two light bulbs get brighter, get dimmer, or exhibit no change in intensity? Why?

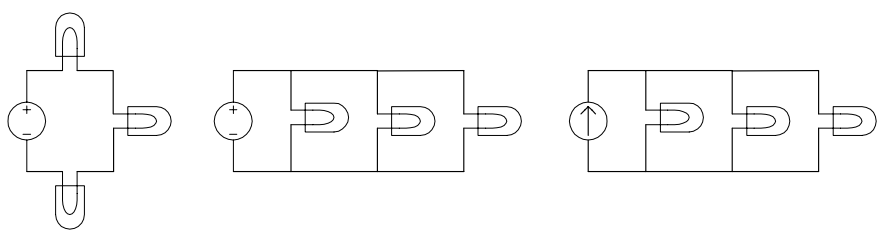

Exercise 2.2: Using the node method, develop a set of simultaneous equations for the network shown below that can be used to solve for the three unknown node voltages in the network. Express these equations in the form

$$G \begin{bmatrix} e_1 \\ e_2 \\ e_3 \end{bmatrix} = S$$

where G is a 3×3 matrix of conductance terms and S is a 3×1 vector of terms involving the sources. You need not solve the set of equations for the node voltages.

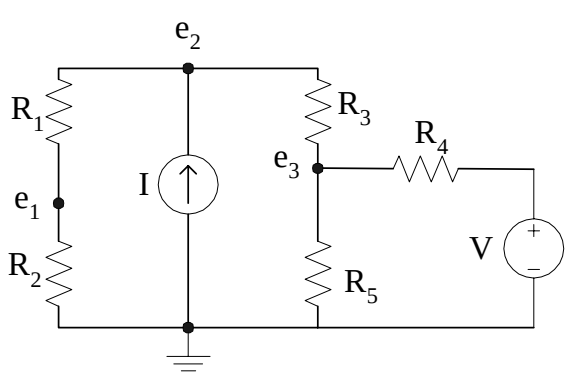

Problem 2.1: This problem focuses on the use of superposition to analyze linear networks.

(A) Write and solve a node equation that determines the node voltage e in Network #1 shown below.

(B) Find the node voltage e in Network #1 by superposition. That is, determine e due to each source alone, and then add the two results. The use of parallel/series resistor simplifications and/or voltage/current division should make this analysis easier. Compare your answer to that found in Part (A).

(C) Find v_0 in Network #2 as a function of v_1, v_2 and v_3 assuming $i_0 = 0$. Also, find the Thevenin equivalent of the network as viewed from its i_0-v_0 port. What application might make use of this network.

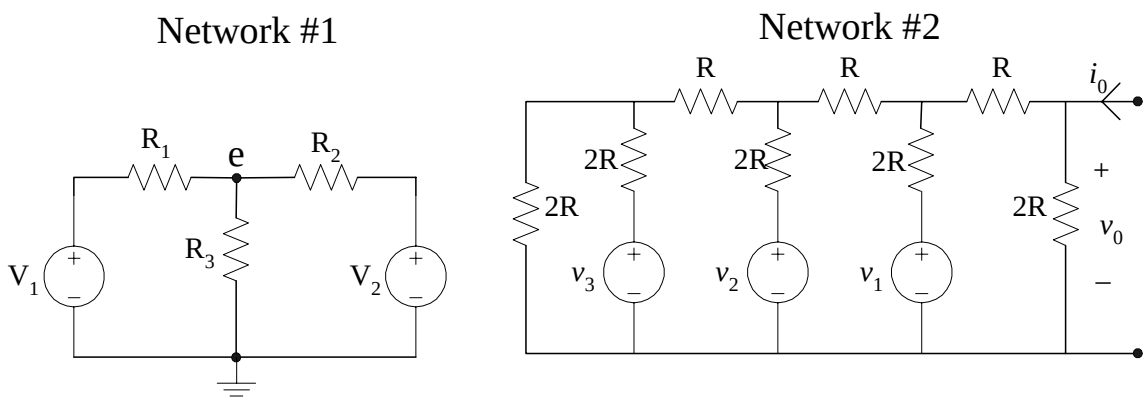

Problem 2.2: Two networks, N1 and N2, are described in terms of their i-v relations, and connected together through a single resistor, as shown below.

(A) Find the Thevenin and Norton equivalents of N1 and N2.

(B) Find the currents i_1 and i_2 that result from the interconnection of N1 and N2.

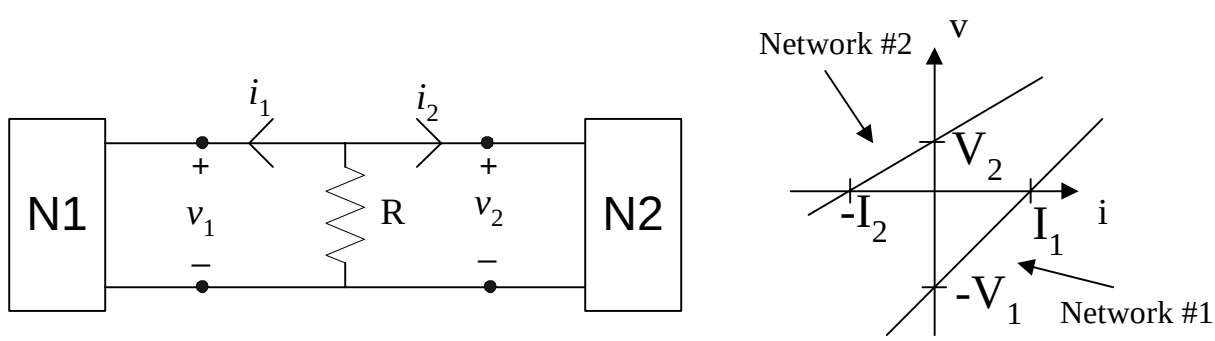

Problem 2.3: Find the Thevenin and Norton equivalents of the following networks, and graph their i-v relations as viewed at their ports.

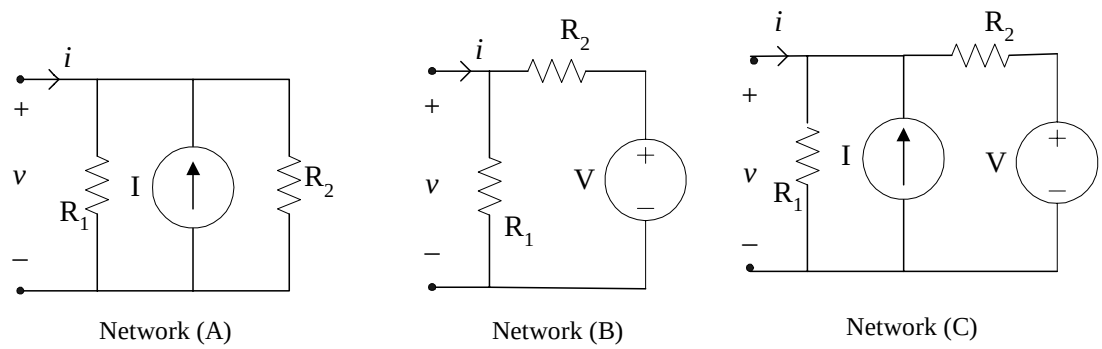

Problem 2.4: This problem studies the network shown below. The network contains a nonlinear resistor having the terminal relation $i_N = \alpha v_N^2$ for $v_N \geq 0$ and $i_N = 0$ for $v_N \leq 0$, where α is a constant with units A/V^2. Assume that α and i_S are both positive.

(A) Analyze the network graphically to determine i_N and v_N in terms of i_S and the network parameters. To do so, note that the current source and linear resistor together constrain the relation between i_N and v_N, and that the nonlinear resistor also constrains this relation. State the two constraints, and on a single graph sketch both constraints and identify the solution for i_N and v_N. Within what voltage range will v_N lie?

(B) Analytically solve for v_N in terms of i_S. Check that this solution is consistent with the graphical solution from Part (A).

(C) Now let $i_S = I_S + i_s$ and let $v_N = V_N + v_n$, where I_S and V_N are a constant large-signal current and voltage, respectively, which together form an operating point, and i_s and v_n are a varying small-signal current and voltage. Using the solution from Part (B), determine V_N in terms of I_S. Then, linearize the solution from Part (B) around the operating point to determine v_n in terms of i_s and I_S.