Motors and Position Determination

Controlling Position

- Feedback is used to control position.
  - Measure the position, subtract a function of it from the desired position and then use this resulting signal to drive the system towards the desired position. This is negative feedback.
  - The natural frequencies of the feedback system are the "zeros" of 1 + G(s)H(s).
    - The total system is unstable if these "zeros" are in the right half plane (RHP). With 180 degrees phase shift, "negative" feedback becomes "positive" feedback.
    - So we want these "zeros" to be in the left half plane (LHP).
    - Putting an integrator into H(s) drives steady state error to zero.
    - But high order systems are more likely to have RHP zeros.
    - Time delay and high gain lead to RHP zeros.

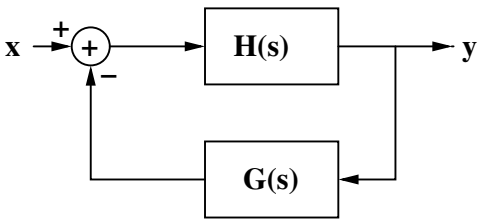

$$\frac{Y(s)}{X(s)} = \frac{H(s)}{1 + G(s)\,H(s)}$$

Servos

- We can control parts of the servo, but the system dynamics is often a part we can't control.
  - The system dynamics results from masses. springs, losses, etc.
- Likely, we will implement servos as digital systems.
  - Digital systems are more flexible to design.
    - They are more repeatable; they are not subject to gain drift.
    - We can use as many bits as we like so we can keep the computation noise small.
  - Digital systems can have significant delays.
    - These delays are sometimes fixed, but are sometimes stochastic.

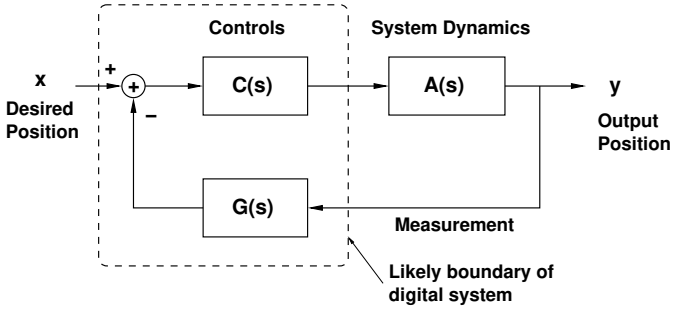

Analog Position Measurements

Voltage is proportional to position.

A linear or rotary potentiometer can be used.

Accuracy is limited to that of the potentiometer and the noise of the power supply voltage.

Two sinusoidal potentiometers are used.

V1 = V0 cos (theta)
V2 = V0 sin (theta)

This can also be done magnetically.

This is called a resolver and requires a complex analog signal detection. The computation can be done with either analog or digital circuitry.

Position Sensing: Analog

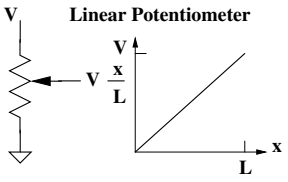

Sinusoidal Potentiometer

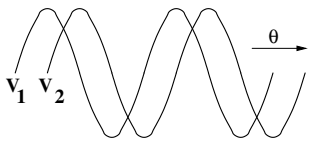

Digital Position Measurement

- Sense light transmission to determine position.
  - Typically through a transparent sector
  - Gives a reading over a range of positions.
    - Depends on extent of transparent sector.
  - We may need a lot of sensors to determine multiple positions.

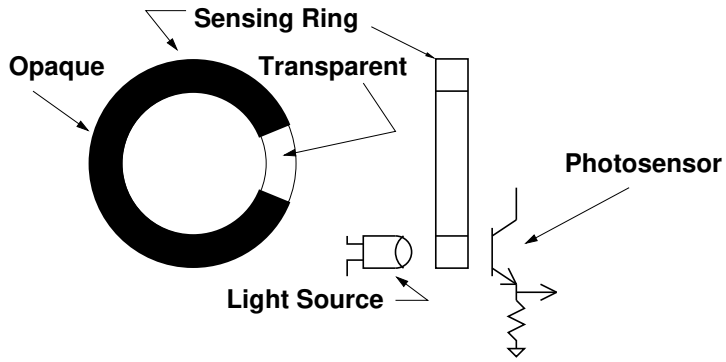

Digital Absolute Position

- Typically, this is used for relatively low resolutions.

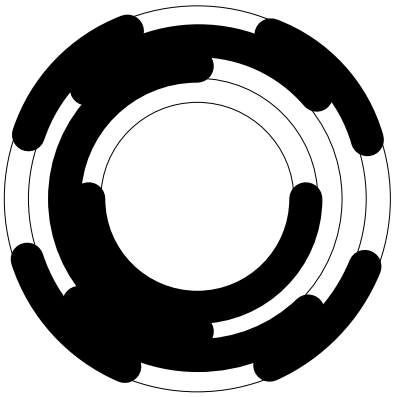

Here is a 4–bit (22.5 degree) resolution wheel.
One source per sensor bit.

Can make these wider.
Resolution is

$$\frac{360^{o}}{2^{N}}$$

Use a Gray code to eliminate chatter.

0	0	0	0
0	0	0	1
0	0	1	1
0	0	1	0
0	1	1	0
0	1	1	1
0	1	0	1
0	1	0	0
1	1	0	0
1	1	0	1
1	1	1	1
1	1	1	0
1	0	1	0
1	0	1	1
1	0	0	1
1	0	0	0

Two-Phase Encoder

- Two Source – Sensor Sets
  - Their position is offset by half the sector width.
  - This example has 30 degree sectors
  - and 15 degree resolution.

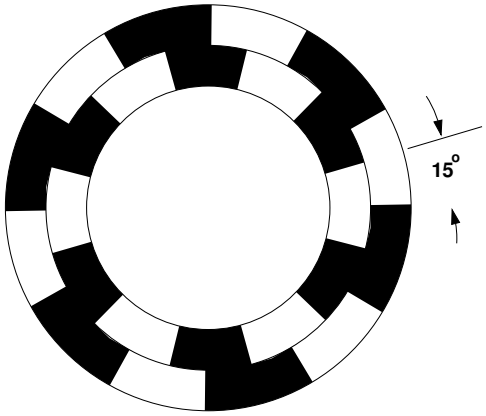

Use of Two-Phase Encoder

- This circuit generates:
  - An Up/Down signal depending on whether the motion is clockwise (CW) or counterclockwise (CCW).
  - A clk signal which rising edge is to operate the counter.

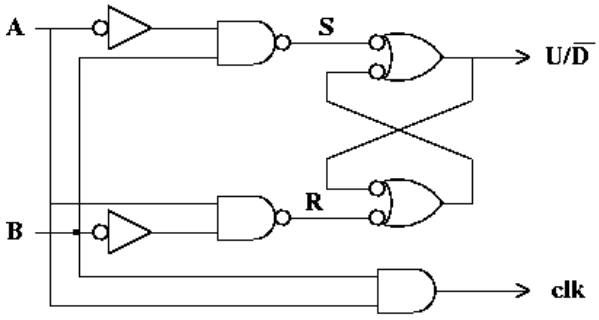

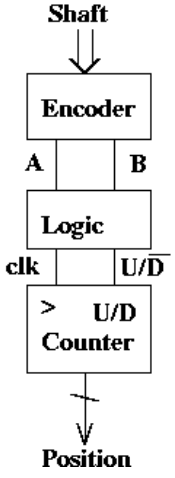

Waveforms

- A and B are signals derived from sensors.
- Rotating one way, the rising edge of clk is when U/D is high.
- Rotating the other way, the rising edge of clk is when U/D is low.

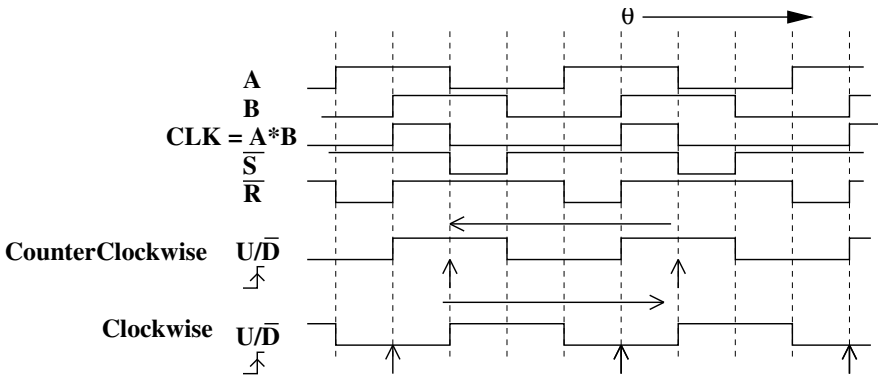

Another Way of Making an Encoder

- Use two sensors like the two-phase encoder but use only one ring and displace the sensors by ½ band.
- Add another ring and a sensor to sense the "home" position.

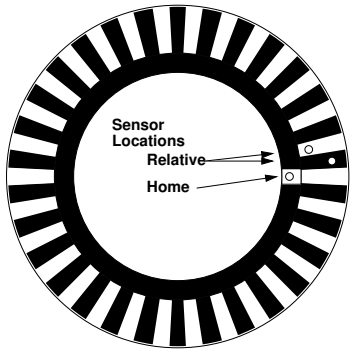

Motors

- Simple servomechanisms are made with DC motors.
  - DC motor model is very simple:
    - It consists of a resistor in series with a voltage source.
    - The voltage source is proportional to the rotational speed.
  - The mechanical system (controlled system) determines the speed as influenced by the torque.

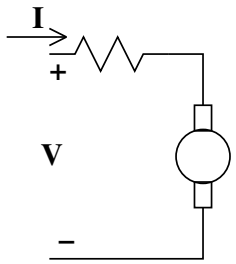

$$V = G\,\Omega + R\,I$$

$$\text{Torque } T = G\,I$$

Permanent Magnet DC Motors

- They are very commonly used.
  - The 'Back Voltage' is proportional to speed.
  - The torque is proportional to the current.
- Servo Strategy:
  - Command torque by setting current.
  - Measure the speed.
- Running open loop:
  - There is a 'zero torque' speed.
  - Torque is proportional to the difference from that speed.

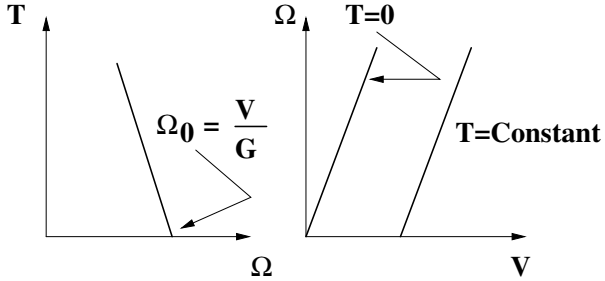

Stepper Motors

- Digital Motors
  - Two 'stacks' (phases)
  - Usually biased by permanent magnets
  - Move a discrete distance per 'step'.
  - This is an axial view cut through both of two sections.

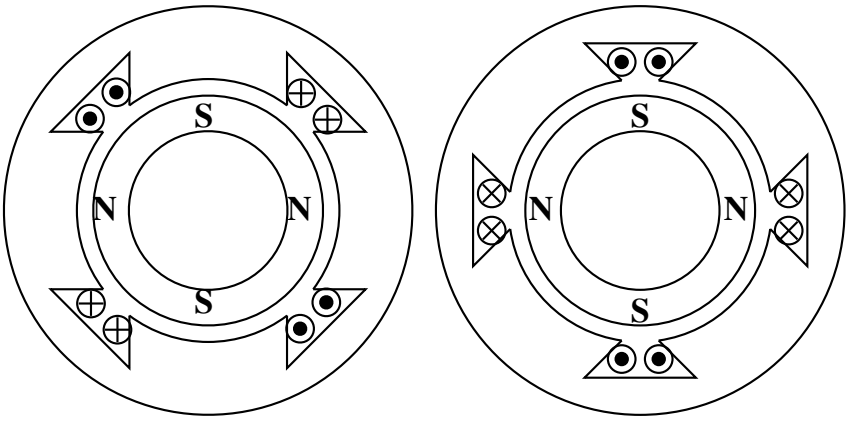

Stepper Motor Windings

- Two distinct 'phases'
  - May be driven as distinct windings.
  - Or may be driven as 'bifilar' windings.
  - Bifilar is easier but less efficient.

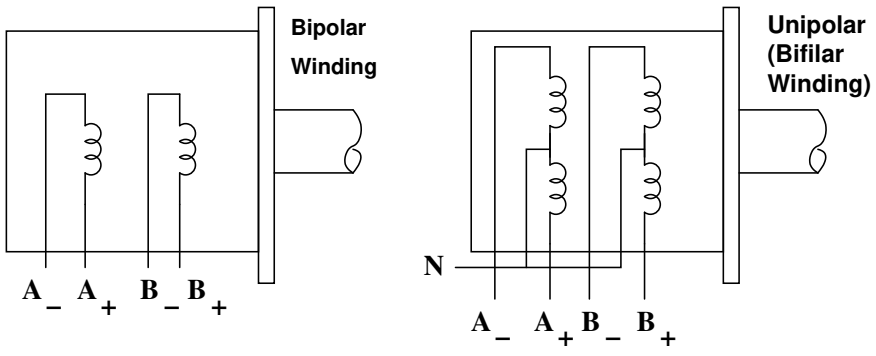

Bipolar Winding

- Driven by 'H-bridges' of transistors
  - Can put current through windings in either direction.
  - But note that the upper transistor drive is tricky.
  - Uses all of the winding.

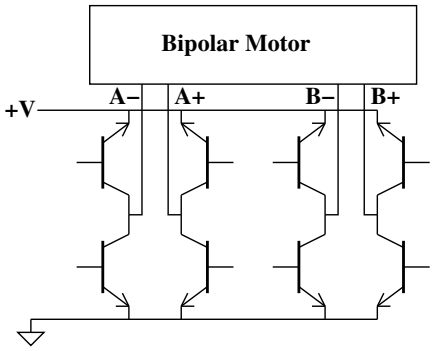

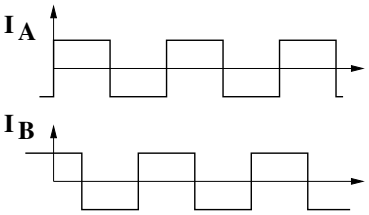

Bifilar Winding

- Driven by four transistors to ground.
  - Note that the center of the windings is held high.
  - Transistors are between winding and ground.
  - NPN bipolar transistors work well.
  - Transistor drives are easily handled.

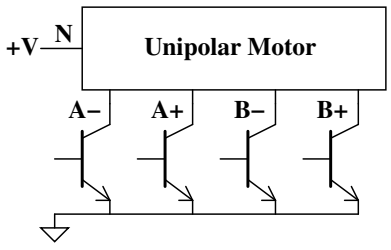

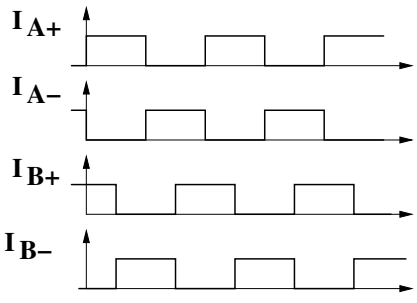

Motors Run in Either Direction

- Current drive strategy:

Bipolar Winding

Step	I_A	I_B
1	+	+
2	+	−
3	−	−
4	−	+

Clockwise ↓ Counter−Clockwise ↑

Bifilar Winding

Step	I_{A+}	I_{A-}	I_{B+}	I_{B-}
1	1	0	1	0
2	1	0	0	1
3	0	1	0	1
4	0	1	1	0

Clockwise ↓ Counter−Clockwise ↑

Dynamics are Important

- Stepper can hold a certain torque.
- Stepper can carry more torque at low speed.
- At high speed, torque must be de-rated.
- Motors draw CURRENT! Make sure your power supply is adequate by measuring the power supply voltage with a 'scope.
  - Use an external supply, not the kit supply.
    - You don't want motor drive noise in your digital circuit (or analog circuit).
- You need to make sure that devices can handle the current and torque.

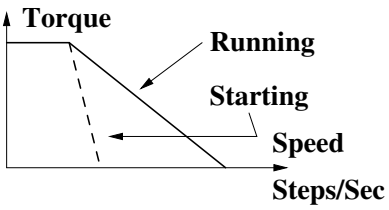

Must sometimes 'ramp up' speed. Holding torque is limited by heating and by saturation.