MASSACHUSETTS INSTITUTE OF TECHNOLOGY
Physics Department

Physics 8.286: The Early Universe — September 16, 2013
Prof. Alan Guth

PROBLEM SET 2

DUE DATE: Due to the Student Holiday this Friday, the problem set will not be due until Monday — Monday, September 23, 2013, 5:00 pm. The first quiz will be on Thursday, October 3, which I think makes it preferable to have Problem Set 3 due on Monday, September 30. That way Problem Set 3 can include all the material discussed through the lecture of Thursday, September 26, which is Lecture 7, and then the quiz will include this same block of material. My policy is that quizzes should only include material that has been reinforced by a problem set that was due before the quiz.

SEPTEMBER/OCTOBER				
MON	TUES	WED	THURS	FRI
16 September	17 Lecture 4	18	19 Lecture 5	20 Student Holiday
23 PS 2 due	24 Lecture 6	25	26 Lecture 7	27
30 PS 3 due	October 1 Lecture 8	2	3 Quiz 1 – in class	4

READING ASSIGNMENT: Barbara Ryden, *Introduction to Cosmology*, Chapters 1-3.

PLANNING AHEAD: If you want to read ahead, the reading assignment with Problem Set 3 will be Weinberg, *The First Three Minutes*, Chapter 3. Problem Sets 1 through 3, including the reading assignments, will be included in the material covered on Quiz 1, on Thursday, October 3.

INTRODUCTION TO THE PROBLEM SET

In this problem set we will consider a universe in which the scale factor is given by

$$a(t) = bt^{2/3} \ ,$$

where b is an arbitrary constant of proportionality which should not appear in the answers to any of the questions below. (We will see in Lecture Notes 3 that

this is the behavior of a flat universe with a mass density that is dominated by nonrelativistic matter.) We will suppose that a distant galaxy is observed with a redshift z. As a concrete example we will consider the most distant known object with a well-determined redshift, the galaxy UDFy-38135539, which has a redshift $z = 8.55$. The discovery of this galaxy was announced in September 2009 by three groups of astronomers*, all of whom discovered it in infrared images in the Hubble Space Telescope Ultra Deep Field. The redshift was initially estimated "photometrically," which means that broad features of the spectrum are determined by measuring the light that comes through a range of filters. The redshift was confirmed spectrographically in October 2010 by Lehnert et al.†

The rate at which the highest measured redshift has been growing has been dramatic. In 1986 the highest measured redshift was only 3.78. It was 4.01 in 1988, 4.73 in 1992, 4.897 in 1994, and 4.92 in 1998, 5.34 in 2000, 6.28 in 2002, and 6.58 in 2003. In 2006 Iye et al.‡ discovered a galaxy with a redshift of 6.96. In 2006 Richard McMahon compiled the graph on the right, which was published in a *News* article on p. 128 of the same issue of Nature as the Iye et al. discovery. The search for high redshift objects continues to be an exciting area of research, as astronomers try to sort out the conditions in the universe when the first galaxies began to form.

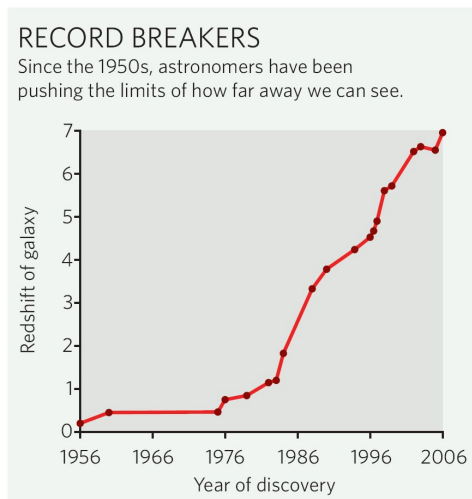

PROBLEM 1: DISTANCE TO THE GALAXY *(10 points)*

Let t_0 denote the present time, and let t_e denote the time at which the light that we are currently receiving was emitted by the galaxy. In terms of these quantities, find the present value of the physical distance ℓ_p between this distant galaxy and us.

---

* R.J. Bouwens et al., Astrophys. J. Letters **709**, L133-L137 (2010), http://arxiv.org/abs/0909.1803; Andrew Bunker et al., Monthly Notices of the Royal Astronomical Society **409**, 855-866 (2010), http://arxiv.org/abs/0909.2255; R.J. McLure et al., Monthly Notices of the Royal Astronomical Society **403**, 960-983 (2010), http://arxiv.org/abs/0909.2437.

† M.D. Lehnert et al., Nature **467**, 940–942 (2010), http://arxiv.org/abs/1010.4312.

‡ Iye et al., "A galaxy at a redshift $z = 6.96$," Nature vol. 443, no. 7108, pp. 186–188 (14 September 14 2006).

PROBLEM 2: TIME OF EMISSION *(10 points)*

Express the redshift z in terms of t_0 and t_e. Find the ratio t_e/t_0 for the $z = 8.55$ galaxy.

PROBLEM 3: DISTANCE IN TERMS OF REDSHIFT z *(10 points)*

Express the present value of the physical distance in terms of the present value of the Hubble expansion rate H_0 and the redshift z. Taking $H_0 \approx 67$ km-sec^{-1}-Mpc^{-1}, how far away is the galaxy? Express your answer both in light-years and in Mpc.

PROBLEM 4: SPEED OF RECESSION *(10 points)*

Find the present rate at which the physical distance ℓ_p between the distant galaxy and us is changing. Express your answer in terms of the redshift z and the speed of light c, and evaluate it numerically for the case $z = 8.55$. Express your answer as a fraction of the speed of light. [If you get it right, this "fraction" is greater than one! Our expanding universe violates special relativity, but is consistent with general relativity.]

PROBLEM 5: APPARENT ANGULAR SIZES *(20 points)*

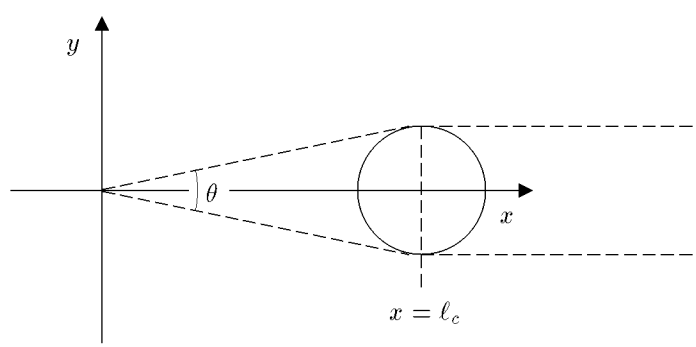

Now suppose for simplicity that the galaxy is spherical, and that its physical diameter was w at the time it emitted the light. (The actual galaxy is seen as an unresolved point source, so we don't know it's actual size and shape.) Find the apparent angular size θ (measured from one edge to the other) of the galaxy as it would be observed from Earth today. Express your answer in terms of w, z, H_0, and c. You may assume that $\theta \ll 1$. Compare your answer to the apparent angular

size of a circle of diameter w in a static Euclidean space, at a distance equal to the present value of the physical distance to the galaxy, as found in Problem 1. [Hint: draw diagrams which trace the light rays in the ***comoving*** coordinate system. If you have it right, you will find that θ has a minimum value for $z = 1.25$, and that θ increases for larger z. This phenomenon makes sense if you think about the distance to the galaxy at the time of emission. If the galaxy is ***very*** far away today, then the light that we now see must have left the object very early, when it was rather close to us!]

PROBLEM 6: RECEIVED RADIATION FLUX *(20 points)*

At the time of emission, the galaxy had a power output P (measured, say, in ergs/sec) which was radiated uniformly in all directions. This power was emitted in the form of photons. What is the radiation energy flux J from this galaxy at the earth today? Energy flux (which might be measured in ergs-cm^{-2}-sec^{-1}) is defined as the energy per unit area per unit time striking a surface that is orthogonal to the direction of energy flow. The easiest way to solve this problem is to consider the trajectories of the photons, as viewed in comoving coordinates. You must calculate the rate at which photons arrive at the detector, and you must also use the fact that the energy of each photon is proportional to its frequency, and is therefore decreased by the redshift. You may find it useful to think of the detector as a small part of a sphere that is centered on the source, as shown in the following diagram:

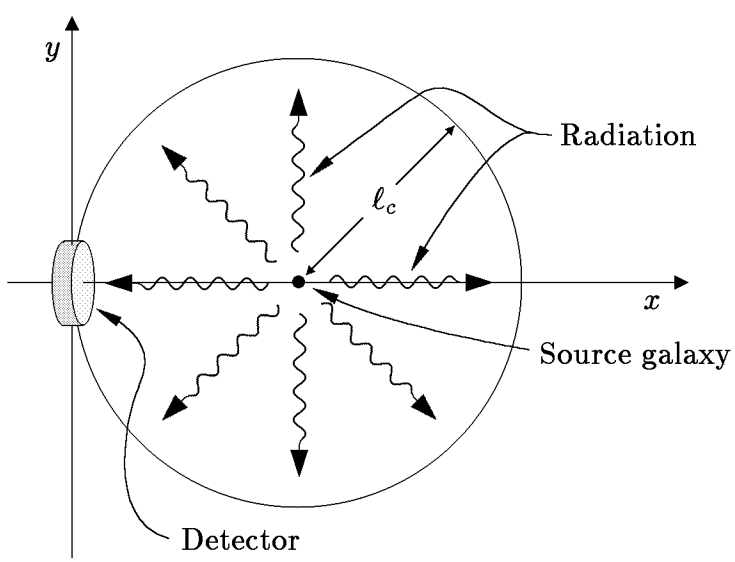

Total points for Problem Set 2: 80.