MASSACHUSETTS INSTITUTE OF TECHNOLOGY
Physics Department

Physics 8.286: The Early Universe — October 27, 2011
Prof. Alan Guth

REVIEW PROBLEMS FOR QUIZ 2

QUIZ DATE: Thursday, November 3, 2011, during the normal class time.

COVERAGE: Lecture Notes 4 and 5; Problem Sets 4 and 5; Weinberg, *The First Three Minutes,* Chapters 4 and 5; In Ryden's *Introduction to Cosmology*, we have read Chapters 4, 5, and 6 during this period. These chapters, however, parallel what we have done or will be doing in lecture, so you should take them as an aid to learning the lecture material. Therefore, there will be no questions on this quiz explicitly based on the reading from Ryden. Chapters 4 and 5 of Weinberg's book are packed with numbers; you need not memorize these numbers, but you should be familiar with their orders of magnitude. We will not take off for the spelling of names, as long as they are vaguely recognizable. For dates before 1900, it will be sufficient for you to know when things happened to within 100 years. For dates after 1900, it will be sufficient if you can place events within 10 years. You should expect one problem based on the reading from Weinberg, and several calculational problems. **One of the problems on the quiz will be taken verbatim (or at least *almost* verbatim) from either the homework assignments, or from the starred problems from this set of Review Problems.** The starred problems are the ones that I recommend that you review most carefully: Problems 3, 4, 5, 6, 8, 10, 13, 14, 15, and 16. There are only two reading questions, Problems 1 and 2. Note that parts 1(d), 1(e), and 2(a) are based on Chapter 6 of Weinberg's book, which we have not yet read.

PURPOSE: These review problems are not to be handed in, but are being made available to help you study. They come mainly from quizzes in previous years. In some cases the number of points assigned to the problem on the quiz is listed — in all such cases it is based on 100 points for the full quiz.

In addition to this set of problems, you will find on the course web page the actual quizzes that were given in 1994, 1996, 1998, 2000, 2002, 2004, 2005, 2007, and 2009. The relevant problems from those quizzes have mostly been incorporated into these review problems, but you still may be interested in looking at the quizzes, just to see how much material has been included in each quiz. The coverage of the upcoming quiz will not necessarily match the coverage of any of the quizzes from previous years. The coverage for each quiz in recent years is usually described at the start of the review problems, as I did here.

REVIEW SESSION AND OFFICE HOURS: To help you study for the quiz, Daniele Bertolini will hold a review session on Monday, October 31, at 7:15 pm, in a room to be announced. I will have my usual office hour on Wednesday evening, 7:30 pm, in Room 8-320.

INFORMATION TO BE GIVEN ON QUIZ:

Each quiz in this course will have a section of "useful information" for your reference. For the second quiz, this useful information will be the following:

SPEED OF LIGHT IN COMOVING COORDINATES:

$$v_{\text{coord}} = \frac{c}{a(t)} \ .$$

DOPPLER SHIFT (For motion along a line):

$$z = v/u \quad \text{(nonrelativistic, source moving)}$$

$$z = \frac{v/u}{1 - v/u} \quad \text{(nonrelativistic, observer moving)}$$

$$z = \sqrt{\frac{1+\beta}{1-\beta}} - 1 \quad \text{(special relativity, with } \beta = v/c\text{)}$$

COSMOLOGICAL REDSHIFT:

$$1 + z \equiv \frac{\lambda_{\text{observed}}}{\lambda_{\text{emitted}}} = \frac{a(t_{\text{observed}})}{a(t_{\text{emitted}})}$$

SPECIAL RELATIVITY:

Time Dilation Factor:

$$\gamma \equiv \frac{1}{\sqrt{1-\beta^2}} \ , \qquad \beta \equiv v/c$$

Lorentz-Fitzgerald Contraction Factor: γ

Relativity of Simultaneity:
Trailing clock reads later by an amount $\beta \ell_0 / c$.

EVOLUTION OF A MATTER-DOMINATED UNIVERSE:

$$H^2 = \left(\frac{\dot{a}}{a}\right)^2 = \frac{8\pi}{3} G\rho - \frac{kc^2}{a^2} \ , \quad \ddot{a} = -\frac{4\pi}{3} G\rho a \ ,$$

$$\rho(t) = \frac{a^3(t_i)}{a^3(t)} \rho(t_i)$$

$$\Omega \equiv \rho/\rho_c \ , \quad \text{where} \quad \rho_c = \frac{3H^2}{8\pi G} \ .$$

Flat ($k = 0$):

$$a(t) \propto t^{2/3}$$
$$\Omega = 1 \ .$$

Closed ($k > 0$):

$$ct = \alpha(\theta - \sin\theta) \ , \quad \frac{a}{\sqrt{k}} = \alpha(1 - \cos\theta) \ ,$$
$$\Omega = \frac{2}{1 + \cos\theta} > 1 \ ,$$
$$\text{where } \alpha \equiv \frac{4\pi}{3}\frac{G\rho}{c^2}\left(\frac{a}{\sqrt{k}}\right)^3 \ .$$

Open ($k < 0$):

$$ct = \alpha\left(\sinh\theta - \theta\right) \ , \quad \frac{a}{\sqrt{\kappa}} = \alpha\left(\cosh\theta - 1\right) \ ,$$
$$\Omega = \frac{2}{1 + \cosh\theta} < 1 \ ,$$
$$\text{where } \alpha \equiv \frac{4\pi}{3}\frac{G\rho}{c^2}\left(\frac{a}{\sqrt{\kappa}}\right)^3 \ ,$$
$$\kappa \equiv -k > 0 \ .$$

ROBERTSON-WALKER METRIC:

$$ds^2 = -c^2\, d\boldsymbol{\tau}^2 = -c^2\, dt^2 + a^2(t)\left\{\frac{dr^2}{1 - kr^2} + r^2\left(d\theta^2 + \sin^2\theta\, d\phi^2\right)\right\}$$

SCHWARZSCHILD METRIC:

$$ds^2 = -c^2 d\boldsymbol{\tau}^2 = -\left(1 - \frac{2GM}{rc^2}\right)c^2 dt^2 + \left(1 - \frac{2GM}{rc^2}\right)^{-1} dr^2$$
$$+ r^2 d\theta^2 + r^2 \sin^2\theta\, d\phi^2 \ ,$$

GEODESIC EQUATION:

$$\frac{d}{ds}\left\{g_{ij}\frac{dx^j}{ds}\right\} = \frac{1}{2}\left(\partial_i g_{k\ell}\right)\frac{dx^k}{ds}\,\frac{dx^\ell}{ds}$$

or:

$$\frac{d}{d\boldsymbol{\tau}}\left\{g_{\mu\nu}\frac{dx^\nu}{d\boldsymbol{\tau}}\right\} = \frac{1}{2}\left(\partial_\mu g_{\lambda\sigma}\right)\frac{dx^\lambda}{d\boldsymbol{\tau}}\frac{dx^\sigma}{d\boldsymbol{\tau}}$$

PROBLEM 1: DID YOU DO THE READING?

(a) *(5 points)* By what factor does the lepton number per comoving volume of the universe change between temperatures of $kT = 10$ MeV and $kT = 0.1$ MeV? You should assume the existence of the normal three species of neutrinos for your answer.

(b) *(5 points)* Measurements of the primordial deuterium abundance would give good constraints on the baryon density of the universe. However, this abundance is hard to measure accurately. Which of the following is NOT a reason why this is hard to do?

(i) The neutron in a deuterium nucleus decays on the time scale of 15 minutes, so almost none of the primordial deuterium produced in the Big Bang is still present.

(ii) The deuterium abundance in the Earth's oceans is biased because, being heavier, less deuterium than hydrogen would have escaped from the Earth's surface.

(iii) The deuterium abundance in the Sun is biased because nuclear reactions tend to destroy it by converting it into helium-3.

(iv) The spectral lines of deuterium are almost identical with those of hydrogen, so deuterium signatures tend to get washed out in spectra of primordial gas clouds.

(v) The deuterium abundance is so small (a few parts per million) that it can be easily changed by astrophysical processes other than primordial nucleosynthesis.

(c) *(5 points)* Give three examples of hadrons.

(d) *(6 points)* In Chapter 6 of *The First Three Minutes*, Steven Weinberg posed the question, "Why was there no systematic search for this [cosmic background] radiation, years before 1965?" In discussing this issue, he contrasted it with the history of two different elementary particles, each of which were predicted approximately 20 years before they were first detected. Name one of these two elementary particles. (If you name them both correctly, you will get 3 points extra credit. However, one right and one wrong will get you 4 points for the question, compared to 6 points for just naming one particle and getting it right.)

Answer: _____

2nd Answer (optional): _____

(e) *(6 points)* In Chapter 6 of *The First Three Minutes*, Steven Weinberg discusses three reasons why the importance of a search for a 3° K microwave radiation

background was not generally appreciated in the 1950s and early 1960s. Choose those three reasons from the following list. (2 points for each right answer, circle at most 3.)

(i) The earliest calculations erroneously predicted a cosmic background temperature of only about 0.1° K, and such a background would be too weak to detect.

(ii) There was a breakdown in communication between theorists and experimentalists.

(iii) It was not technologically possible to detect a signal as weak as a 3° K microwave background until about 1965.

(iv) Since almost all physicists at the time were persuaded by the steady state model, the predictions of the big bang model were not taken seriously.

(v) It was extraordinarily difficult for physicists to take seriously *any* theory of the early universe.

(vi) The early work on nucleosynthesis by Gamow, Alpher, Herman, and Follin, et al., had attempted to explain the origin of all complex nuclei by reactions in the early universe. This program was never very successful, and its credibility was further undermined as improvements were made in the alternative theory, that elements are synthesized in stars.

PROBLEM 2: DID YOU DO THE READING? *(24 points)*

The following problem was Problem 1 of Quiz 2 in 2007.

(a) *(6 points)* In 1948 Ralph A. Alpher and Robert Herman wrote a paper predicting a cosmic microwave background with a temperature of 5 K. The paper was based on a cosmological model that they had developed with George Gamow, in which the early universe was assumed to have been filled with hot neutrons. As the universe expanded and cooled the neutrons underwent beta decay into protons, electrons, and antineutrinos, until at some point the universe cooled enough for light elements to be synthesized. Alpher and Herman found that to account for the observed present abundances of light elements, the ratio of photons to nuclear particles must have been about 10^9. Although the predicted temperature was very close to the actual value of 2.7 K, the theory differed from our present theory in two ways. Circle the two correct statements in the following list. (3 points for each right answer; circle at most 2.)

(i) Gamow, Alpher, and Herman assumed that the neutron could decay, but now the neutron is thought to be absolutely stable.

(ii) In the current theory, the universe started with nearly equal densities of protons and neutrons, not all neutrons as Gamow, Alpher, and Herman assumed.

(iii) In the current theory, the universe started with mainly alpha particles, not all neutrons as Gamow, Alpher, and Herman assumed. (Note: an alpha particle is the nucleus of a helium atom, composed of two protons and two neutrons.)

(iv) In the current theory, the conversion of neutrons into protons (and vice versa) took place mainly through collisions with electrons, positrons, neutrinos, and antineutrinos, not through the decay of the neutrons.

(v) The ratio of photons to nuclear particles in the early universe is now believed to have been about 10^3, not 10^9 as Alpher and Herman concluded.

(b) *(6 points)* In Weinberg's "Recipe for a Hot Universe," he described the primordial composition of the universe in terms of three conserved quantities: electric charge, baryon number, and lepton number. If electric charge is measured in units of the electron charge, then all three quantities are integers for which the number density can be compared with the number density of photons. For each quantity, which choice most accurately describes the initial ratio of the number density of this quantity to the number density of photons:

Electric Charge:	(i) $\sim 10^9$	(ii) ~ 1000	(iii) ~ 1
	(iv) $\sim 10^{-6}$	(v) either zero or negligible	
Baryon Number:	(i) $\sim 10^{-20}$	(ii) $\sim 10^{-9}$	(iii) $\sim 10^{-6}$
	(iv) ~ 1	(v) anywhere from 10^{-5} to 1	
Lepton Number:	(i) $\sim 10^9$	(ii) ~ 1000	(iii) ~ 1
	(iv) $\sim 10^{-6}$	(v) could be as high as ~ 1, but is assumed to be very small	

(c) *(12 points)* The figure below comes from Weinberg's Chapter 5, and is labeled *The Shifting Neutron-Proton Balance.*

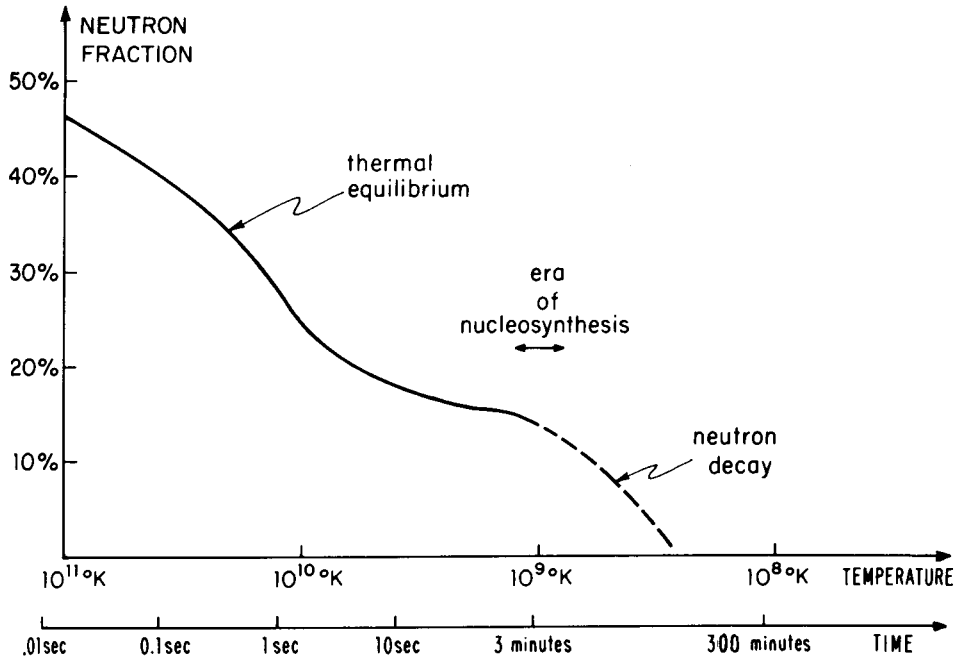

(i) *(3 points)* During the period labeled "thermal equilibrium," the neutron fraction is changing because (choose one):

(A) The neutron is unstable, and decays into a proton, electron, and antineutrino with a lifetime of about 1 second.

(B) The neutron is unstable, and decays into a proton, electron, and antineutrino with a lifetime of about 15 seconds.

(C) The neutron is unstable, and decays into a proton, electron, and antineutrino with a lifetime of about 15 minutes.

(D) Neutrons and protons can be converted from one into through reactions such as

$$\text{antineutrino} + \text{proton} \longleftrightarrow \text{electron} + \text{neutron}$$
$$\text{neutrino} + \text{neutron} \longleftrightarrow \text{positron} + \text{proton}.$$

(E) Neutrons and protons can be converted from one into the other through reactions such as

$$\text{antineutrino} + \text{proton} \longleftrightarrow \text{positron} + \text{neutron}$$
$$\text{neutrino} + \text{neutron} \longleftrightarrow \text{electron} + \text{proton}.$$

(F) Neutrons and protons can be created and destroyed by reactions such as

$$\text{proton} + \text{neutrino} \longleftrightarrow \text{positron} + \text{antineutrino}$$
$$\text{neutron} + \text{antineutrino} \longleftrightarrow \text{electron} + \text{positron}.$$

(ii) *(3 points)* During the period labeled "neutron decay," the neutron fraction is changing because (choose one):

(A) The neutron is unstable, and decays into a proton, electron, and antineutrino with a lifetime of about 1 second.

(B) The neutron is unstable, and decays into a proton, electron, and antineutrino with a lifetime of about 15 seconds.

(C) The neutron is unstable, and decays into a proton, electron, and antineutrino with a lifetime of about 15 minutes.

(D) Neutrons and protons can be converted from one into the other through reactions such as

$$\text{antineutrino} + \text{proton} \longleftrightarrow \text{electron} + \text{neutron}$$
$$\text{neutrino} + \text{neutron} \longleftrightarrow \text{positron} + \text{proton}.$$

(E) Neutrons and protons can be converted from one into the other through reactions such as

$$\text{antineutrino} + \text{proton} \longleftrightarrow \text{positron} + \text{neutron}$$
$$\text{neutrino} + \text{neutron} \longleftrightarrow \text{electron} + \text{proton}.$$

(F) Neutrons and protons can be created and destroyed by reactions such as

$$\text{proton} + \text{neutrino} \longleftrightarrow \text{positron} + \text{antineutrino}$$
$$\text{neutron} + \text{antineutrino} \longleftrightarrow \text{electron} + \text{positron}.$$

(iii) *(3 points)* The masses of the neutron and proton are not exactly equal, but instead

(A) The neutron is more massive than a proton with a rest energy difference of 1.293 GeV (1 GeV = 10^9 eV).

(B) The neutron is more massive than a proton with a rest energy difference of 1.293 MeV (1 MeV = 10^6 eV).

(C) The neutron is more massive than a proton with a rest energy difference of 1.293 KeV (1 KeV = 10^3 eV).

(D) The proton is more massive than a neutron with a rest energy difference of 1.293 GeV.

(E) The proton is more massive than a neutron with a rest energy difference of 1.293 MeV.

(F) The proton is more massive than a neutron with a rest energy difference of 1.293 KeV.

(iv) *(3 points)* During the period labeled "era of nucleosynthesis," (choose one:)

(A) Essentially all the neutrons present combine with protons to form helium nuclei, which mostly survive until the present time.

(B) Essentially all the neutrons present combine with protons to form deuterium nuclei, which mostly survive until the present time.

(C) About half the neutrons present combine with protons to form helium nuclei, which mostly survive until the present time, and the other half of the neutrons remain free.

(D) About half the neutrons present combine with protons to form deuterium nuclei, which mostly survive until the present time, and the other half of the neutrons remain free.

(E) Essentially all the protons present combine with neutrons to form helium nuclei, which mostly survive until the present time.

(F) Essentially all the protons present combine with neutrons to form deuterium nuclei, which mostly survive until the present time.

* PROBLEM 3: EVOLUTION OF AN OPEN UNIVERSE

The following problem was taken from Quiz 2, 1990, where it counted 10 points out of 100.

Consider an open, matter-dominated universe, as described by the evolution equations on the front of the quiz. Find the time t at which $a/\sqrt{\kappa} = 2\alpha$.

* PROBLEM 4: ANTICIPATING A BIG CRUNCH

Suppose that we lived in a closed, matter-dominated universe, as described by the equations on the front of the quiz. Suppose further that we measured the mass density parameter Ω to be $\Omega_0 = 2$, and we measured the Hubble "constant" to have some value H_0. How much time would we have before our universe ended in a big crunch, at which time the scale factor $a(t)$ would collapse to 0?

* PROBLEM 5: TRACING LIGHT RAYS IN A CLOSED, MATTER-DOMINATED UNIVERSE *(30 points)*

The following problem was Problem 3, Quiz 2, 1998.

The spacetime metric for a homogeneous, isotropic, closed universe is given by the Robertson-Walker formula:

$$ds^2 = -c^2\, d\boldsymbol{\tau}^2 = -c^2\, dt^2 + a^2(t) \left\{ \frac{dr^2}{1-r^2} + r^2 \left(d\theta^2 + \sin^2\theta\, d\phi^2 \right) \right\} ,$$

where I have taken $k = 1$. To discuss motion in the radial direction, it is more convenient to work with an alternative radial coordinate ψ, related to r by

$$r = \sin\psi \ .$$

Then

$$\frac{dr}{\sqrt{1-r^2}} = d\psi \ ,$$

so the metric simplifies to

$$ds^2 = -c^2\, d\boldsymbol{\tau}^2 = -c^2\, dt^2 + a^2(t)\left\{d\psi^2 + \sin^2\psi\left(d\theta^2 + \sin^2\theta\, d\phi^2\right)\right\} \ .$$

(a) *(7 points)* A light pulse travels on a null trajectory, which means that $d\boldsymbol{\tau} = 0$ for each segment of the trajectory. Consider a light pulse that moves along a radial line, so $\theta = \phi =$ constant. Find an expression for $d\psi/dt$ in terms of quantities that appear in the metric.

(b) *(8 points)* Write an expression for the physical horizon distance $\ell_{\rm phys}$ at time t. You should leave your answer in the form of a definite integral.

The form of $a(t)$ depends on the content of the universe. If the universe is matter-dominated (*i.e.*, dominated by nonrelativistic matter), then $a(t)$ is described by the parametric equations

$$ct = \alpha(\theta - \sin\theta) \ ,$$
$$a = \alpha(1 - \cos\theta) \ ,$$

where

$$\alpha \equiv \frac{4\pi}{3}\frac{G\rho a^3}{c^2} \ .$$

These equations are identical to those on the front of the exam, except that I have chosen $k = 1$.

(c) *(10 points)* Consider a radial light-ray moving through a matter-dominated closed universe, as described by the equations above. Find an expression for $d\psi/d\theta$, where θ is the parameter used to describe the evolution.

(d) *(5 points)* Suppose that a photon leaves the origin of the coordinate system ($\psi = 0$) at $t = 0$. How long will it take for the photon to return to its starting place? Express your answer as a fraction of the full lifetime of the universe, from big bang to big crunch.

* PROBLEM 6: LENGTHS AND AREAS IN A TWO-DIMENSIONAL METRIC *(25 points)*

The following problem was Problem 3, Quiz 2, 1994:

Suppose a two dimensional space, described in polar coordinates (r, θ), has a metric given by

$$ds^2 = (1 + ar)^2\, dr^2 + r^2(1 + br)^2\, d\theta^2 \ ,$$

where a and b are positive constants. Consider the path in this space which is formed by starting at the origin, moving along the $\theta = 0$ line to $r = r_0$, then moving at fixed r to $\theta = \pi/2$, and then moving back to the origin at fixed θ. The path is shown below:

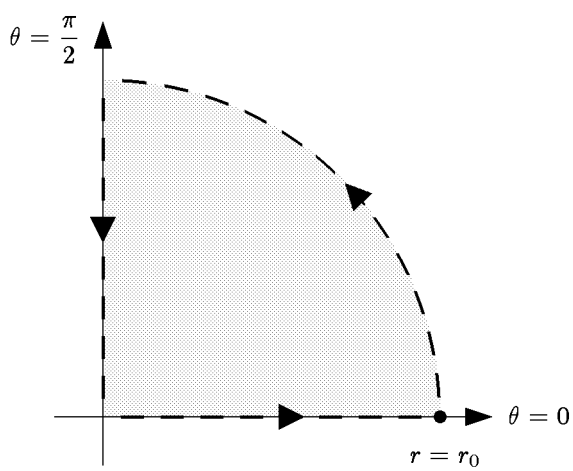

a) *(10 points)* Find the total length of this path.

b) *(15 points)* Find the area enclosed by this path.

PROBLEM 7: GEOMETRY IN A CLOSED UNIVERSE *(25 points)*

The following problem was Problem 4, Quiz 2, 1988:

Consider a universe described by the Robertson–Walker metric on the first page of the quiz, with $k = 1$. The questions below all pertain to some fixed time t, so the scale factor can be written simply as a, dropping its explicit t-dependence.

A small rod has one end at the point $(r = h,\ \theta = 0,\ \phi = 0)$ and the other end at the point $(r = h,\ \theta = \Delta\theta,\ \phi = 0)$. Assume that $\Delta\theta \ll 1$.

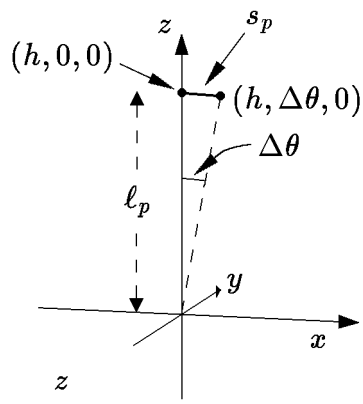

(a) Find the physical distance ℓ_p from the origin ($r = 0$) to the first end $(h, 0, 0)$ of the rod. You may find one of the following integrals useful:

$$\int \frac{dr}{\sqrt{1-r^2}} = \sin^{-1} r$$

$$\int \frac{dr}{1-r^2} = \frac{1}{2} \ln\left(\frac{1+r}{1-r}\right) .$$

(b) Find the physical length s_p of the rod. Express your answer in terms of the scale factor a, and the coordinates h and $\Delta\theta$.

(c) Note that $\Delta\theta$ is the angle subtended by the rod, as seen from the origin. Write an expression for this angle in terms of the physical distance ℓ_p, the physical length s_p, and the scale factor a.

*PROBLEM 8: THE GENERAL SPHERICALLY SYMMETRIC METRIC *(20 points)*

The following problem was Problem 3, Quiz 2, 1986:

The metric for a given space depends of course on the coordinate system which is used to describe it. It can be shown that for any three dimensional space which is spherically symmetric about a particular point, coordinates can be found so that the metric has the form

$$ds^2 = dr^2 + \rho^2(r)\left[d\theta^2 + \sin^2\theta\, d\phi^2\right]$$

for some function $\rho(r)$. The coordinates θ and ϕ have their usual ranges: θ varies between 0 and π, and ϕ varies from 0 to 2π, where $\phi = 0$ and $\phi = 2\pi$ are identified. Given this metric, consider the sphere whose outer boundary is defined by $r = r_0$.

(a) Find the physical radius a of the sphere. (By "radius", I mean the physical length of a radial line which extends from the center to the boundary of the sphere.)

(b) Find the physical area of the surface of the sphere.

(c) Find an explicit expression for the volume of the sphere. Be sure to include the limits of integration for any integrals which occur in your answer.

(d) Suppose a new radial coordinate σ is introduced, where σ is related to r by

$$\sigma = r^2 \ .$$

Express the metric in terms of this new variable.

PROBLEM 9: VOLUMES IN A ROBERTSON-WALKER UNIVERSE *(20 points)*

The following problem was Problem 1, Quiz 3, 1990:

The metric for a Robertson-Walker universe is given by

$$ds^2 = a^2(t)\left\{\frac{dr^2}{1-kr^2} + r^2\left(d\theta^2 + \sin^2\theta\, d\phi^2\right)\right\} \ .$$

Calculate the volume $V(r_{\max})$ of the sphere described by

$$r \leq r_{\max} \ .$$

You should carry out any angular integrations that may be necessary, but you may leave your answer in the form of a radial integral which is not carried out. Be sure, however, to clearly indicate the limits of integration.

* PROBLEM 10: THE SCHWARZSCHILD METRIC *(25 points)*

The follow problem was Problem 4, Quiz 3, 1992:

The space outside a spherically symmetric mass M is described by the Schwarzschild metric, given at the front of the exam. Two observers, designated A and B, are located along the same radial line, with values of the coordinate r given by r_A and r_B, respectively, with $r_A < r_B$. You should assume that both observers lie outside the Schwarzschild horizon.

a) *(5 points)* Write down the expression for the Schwarzschild horizon radius R_S, expressed in terms of M and fundamental constants.

b) *(5 points)* What is the proper distance between A and B? It is okay to leave the answer to this part in the form of an integral that you do not evaluate—but be sure to clearly indicate the limits of integration.

c) *(5 points)* Observer A has a clock that emits an evenly spaced sequence of ticks, with proper time separation $\Delta\tau_A$. What will be the coordinate time separation Δt_A between these ticks?

d) *(5 points)* At each tick of A's clock, a light pulse is transmitted. Observer B receives these pulses, and measures the time separation on his own clock. What is the time interval $\Delta\tau_B$ measured by B.

e) *(5 points)* Suppose that the object creating the gravitational field is a static black hole, so the Schwarzschild metric is valid for all r. Now suppose that one considers the case in which observer A lies on the Schwarzschild horizon, so $r_A \equiv R_S$. Is the proper distance between A and B finite for this case? Does the time interval of the pulses received by B, $\Delta\tau_B$, diverge in this case?

PROBLEM 11: GEODESICS *(20 points)*

The following problem was Problem 4, Quiz 2, 1986:

Ordinary Euclidean two-dimensional space can be described in polar coordinates by the metric

$$ds^2 = dr^2 + r^2\, d\theta^2 \ .$$

(a) Suppose that $r(\lambda)$ and $\theta(\lambda)$ describe a geodesic in this space, where the parameter λ is the arc length measured along the curve. Use the general formula on the front of the exam to obtain explicit differential equations which $r(\lambda)$ and $\theta(\lambda)$ must obey.

(b) Now introduce the usual Cartesian coordinates, defined by

$$x = r\cos\theta \ ,$$
$$y = r\sin\theta \ .$$

Use your answer to (a) to show that the line $y = 1$ is a geodesic curve.

PROBLEM 12: GEODESICS ON THE SURFACE OF A SPHERE

In this problem we will test the geodesic equation by computing the geodesic curves on the surface of a sphere. We will describe the sphere as in Lecture Notes 5, with metric given by

$$ds^2 = a^2 \left(d\theta^2 + \sin^2\theta \, d\phi^2\right) \quad .$$

(a) Clearly one geodesic on the sphere is the equator, which can be parametrized by $\theta = \pi/2$ and $\phi = \psi$, where ψ is a parameter which runs from 0 to 2π. Show that if the equator is rotated by an angle α about the x-axis, then the equations become:

$$\cos\theta = \sin\psi \sin\alpha$$

$$\tan\phi = \tan\psi \cos\alpha \quad .$$

(b) Using the generic form of the geodesic equation on the front of the exam, derive the differential equation which describes geodesics in this space.

(c) Show that the expressions in (a) satisfy the differential equation for the geodesic. Hint: The algebra on this can be messy, but I found things were reasonably simple if I wrote the derivatives in the following way:

$$\frac{d\theta}{d\psi} = -\frac{\cos\psi \sin\alpha}{\sqrt{1 - \sin^2\psi \sin^2\alpha}} \quad , \qquad \frac{d\phi}{d\psi} = \frac{\cos\alpha}{1 - \sin^2\psi \sin^2\alpha} \quad .$$

∗PROBLEM 13: GEODESICS IN A CLOSED UNIVERSE

The following problem was Problem 3, Quiz 3, 2000, where it was worth 40 points plus 5 points extra credit.

Consider the case of closed Robertson-Walker universe. Taking $k = 1$, the spacetime metric can be written in the form

$$ds^2 = -c^2 \, d\tau^2 = -c^2 \, dt^2 + a^2(t) \left\{ \frac{dr^2}{1 - r^2} + r^2 \left(d\theta^2 + \sin^2\theta \, d\phi^2\right) \right\} \quad .$$

We will assume that this metric is given, and that $a(t)$ has been specified. While galaxies are approximately stationary in the comoving coordinate system described by this metric, we can still consider an object that moves in this system. In particular, in this problem we will consider an object that is moving in the radial direction (r-direction), under the influence of no forces other than gravity. Hence the object will travel on a geodesic.

(a) *(7 points)* Express $d\tau/dt$ in terms of dr/dt.

(b) *(3 points)* Express $dt/d\tau$ in terms of dr/dt.

(c) *(10 points)* If the object travels on a trajectory given by the function $r_p(t)$ between some time t_1 and some later time t_2, write an integral which gives the total amount of time that a clock attached to the object would record for this journey.

(d) *(10 points)* During a time interval dt, the object will move a coordinate distance

$$dr = \frac{dr}{dt} dt \ .$$

Let $d\ell$ denote the physical distance that the object moves during this time. By "physical distance," I mean the distance that would be measured by a comoving observer (an observer stationary with respect to the coordinate system) who is located at the same point. The quantity $d\ell/dt$ can be regarded as the physical speed v_{phys} of the object, since it is the speed that would be measured by a comoving observer. Write an expression for v_{phys} as a function of dr/dt and r.

(e) *(10 points)* Using the formulas at the front of the exam, derive the geodesic equation of motion for the coordinate r of the object. Specifically, you should derive an equation of the form

$$\frac{d}{d\tau}\left[A\frac{dr}{d\tau}\right] = B\left(\frac{dt}{d\tau}\right)^2 + C\left(\frac{dr}{d\tau}\right)^2 + D\left(\frac{d\theta}{d\tau}\right)^2 + E\left(\frac{d\phi}{d\tau}\right)^2 \ ,$$

where A, B, C, D, and E are functions of the coordinates, some of which might be zero.

(f) *(5 points EXTRA CREDIT)* On Problem 3 of Problem Set 5 we learned that in a flat Robertson-Walker metric, the relativistically defined momentum of a particle,

$$p = \frac{m v_{\text{phys}}}{\sqrt{1 - \frac{v_{\text{phys}}^2}{c^2}}} \ ,$$

falls off as $1/a(t)$. Use the geodesic equation derived in part (e) to show that the same is true in a closed universe.

∗PROBLEM 14: A TWO-DIMENSIONAL CURVED SPACE *(40 points)*

The following problem was Problem 3, Quiz 2, 2002.

Consider a two-dimensional curved space described by polar coordinates u and θ, where $0 \le u \le a$ and $0 \le \theta \le 2\pi$, and $\theta = 2\pi$ is as usual identified with $\theta = 0$. The metric is given by

$$\mathrm{d}s^2 = \frac{a\,\mathrm{d}u^2}{4u(a-u)} + u\,\mathrm{d}\theta^2 \ .$$

A diagram of the space is shown at the right, but you should of course keep in mind that the diagram does not accurately reflect the distances defined by the metric.

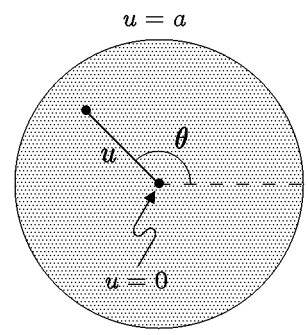

(a) *(6 points)* Find the radius R of the space, defined as the length of a radial (i.e., θ = *constant*) line. You may express your answer as a definite integral, which you need not evaluate. Be sure, however, to specify the limits of integration.

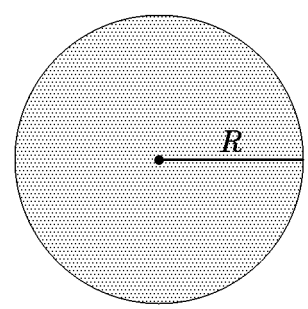

(b) *(6 points)* Find the circumference S of the space, defined as the length of the boundary of the space at $u = a$.

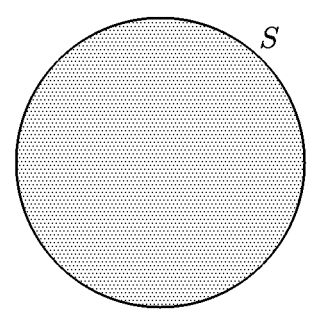

(c) *(7 points)* Consider an annular region as shown, consisting of all points with a u-coordinate in the range $u_0 \le u \le u_0 + \mathrm{d}u$. Find the physical area $\mathrm{d}A$ of this region, to first order in $\mathrm{d}u$.

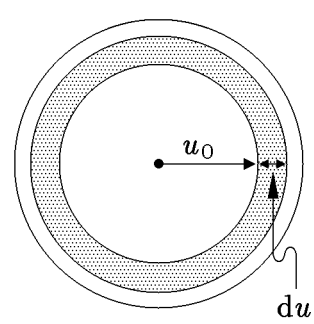

(d) *(3 points)* Using your answer to part (c), write an expression for the total area of the space.

(e) *(10 points)* Consider a geodesic curve in this space, described by the functions $u(s)$ and $\theta(s)$, where the parameter s is chosen to be the arc length along the curve. Find the geodesic equation for $u(s)$, which should have the form

$$\frac{\mathrm{d}}{\mathrm{d}s}\left[F(u,\theta)\,\frac{\mathrm{d}u}{\mathrm{d}s}\right] = \ldots\ ,$$

where $F(u,\theta)$ is a function that you will find. (Note that by writing F as a function of u and θ, we are saying that it *could* depend on either or both of them, but we are not saying that it *necessarily* depends on them.) You need not simplify the left-hand side of the equation.

(f) *(8 points)* Similarly, find the geodesic equation for $\theta(s)$, which should have the form

$$\frac{\mathrm{d}}{\mathrm{d}s}\left[G(u,\theta)\,\frac{\mathrm{d}\theta}{\mathrm{d}s}\right] = \ldots\ ,$$

where $G(u,\theta)$ is a function that you will find. Again, you need not simplify the left-hand side of the equation.

∗PROBLEM 15: ROTATING FRAMES OF REFERENCE *(35 points)*

The following problem was Problem 3, Quiz 2, 2004.

In this problem we will use the formalism of general relativity and geodesics to derive the relativistic description of a rotating frame of reference.

The problem will concern the consequences of the metric

$$ds^2 = -c^2\,\mathrm{d}\tau^2 = -c^2\,\mathrm{d}t^2 + \left[\mathrm{d}r^2 + r^2\,(\mathrm{d}\phi + \omega\,\mathrm{d}t)^2 + \mathrm{d}z^2\right]\ , \qquad \text{(P15.1)}$$

which corresponds to a coordinate system rotating about the z-axis, where ϕ is the azimuthal angle around the z-axis. The coordinates have the usual range for cylindrical coordinates: $-\infty < t < \infty$, $0 \le r < \infty$, $-\infty < z < \infty$, and $0 \le \phi < 2\pi$, where $\phi = 2\pi$ is identified with $\phi = 0$.

EXTRA INFORMATION

To work the problem, you do not need to know anything about where this metric came from. However, it might (or might not!) help your intuition to know that Eq. (P15.1) was obtained by starting with a Minkowski metric in cylindrical coordinates $\bar{t}$, $\bar{r}$, $\bar{\phi}$, *and* $\bar{z}$,

$$c^2\,\mathrm{d}\boldsymbol{\tau}^2 = c^2\,\mathrm{d}\bar{t}^{\,2} - \left[\mathrm{d}\bar{r}^2 + \bar{r}^2\,\mathrm{d}\bar{\phi}^2 + \mathrm{d}\bar{z}^2\right] \ ,$$

and then introducing new coordinates t, r, ϕ, *and* z *that are related by*

$$\bar{t} = t, \qquad \bar{r} = r, \quad \bar{\phi} = \phi + \omega t, \quad \bar{z} = z \ ,$$

so $\mathrm{d}\bar{t} = \mathrm{d}t$, $\mathrm{d}\bar{r} = \mathrm{d}r$, $\mathrm{d}\bar{\phi} = \mathrm{d}\phi + \omega\,\mathrm{d}t$, *and* $\mathrm{d}\bar{z} = \mathrm{d}z$.

(a) *(8 points)* The metric can be written in matrix form by using the standard definition

$$ds^2 = -c^2\,\mathrm{d}\boldsymbol{\tau}^2 \equiv g_{\mu\nu}\,dx^\mu\,dx^\nu \ ,$$

where $x^0 \equiv t$, $x^1 \equiv r$, $x^2 \equiv \phi$, and $x^3 \equiv z$. Then, for example, g_{11} (which can also be called g_{rr}) is equal to 1. Find explicit expressions to complete the list of the nonzero entries in the matrix $g_{\mu\nu}$:

$$\begin{aligned}
&g_{11} \equiv g_{rr} = 1\\
&g_{00} \equiv g_{tt} = ?\\
&g_{20} \equiv g_{02} \equiv g_{\phi t} \equiv g_{t\phi} = ?\\
&g_{22} \equiv g_{\phi\phi} = ?\\
&g_{33} \equiv g_{zz} = ?
\end{aligned} \tag{P15.2}$$

If you cannot answer part (a), you can introduce unspecified functions $f_1(r)$, $f_2(r)$, $f_3(r)$, and $f_4(r)$, with

$$\begin{aligned}
&g_{11} \equiv g_{rr} = 1\\
&g_{00} \equiv g_{tt} = f_1(r)\\
&g_{20} \equiv g_{02} \equiv g_{\phi t} \equiv g_{t\phi} = f_1(r)\\
&g_{22} \equiv g_{\phi\phi} = f_3(r)\\
&g_{33} \equiv g_{zz} = f_4(r) \ ,
\end{aligned} \tag{P15.3}$$

and you can then express your answers to the subsequent parts in terms of these unspecified functions.

(b) *(10 points)* Using the geodesic equations from the front of the quiz,

$$\frac{\mathrm{d}}{\mathrm{d}\boldsymbol{\tau}}\left\{g_{\mu\nu}\frac{\mathrm{d}x^{\nu}}{\mathrm{d}\boldsymbol{\tau}}\right\} = \frac{1}{2}\left(\partial_{\mu}g_{\lambda\sigma}\right)\frac{\mathrm{d}x^{\lambda}}{\mathrm{d}\boldsymbol{\tau}}\frac{\mathrm{d}x^{\sigma}}{\mathrm{d}\boldsymbol{\tau}} ,$$

explicitly write the equation that results when the free index μ is equal to 1, corresponding to the coordinate r.

(c) *(7 points)* Explicitly write the equation that results when the free index μ is equal to 2, corresponding to the coordinate ϕ.

(d) *(10 points)* Use the metric to find an expression for $\mathrm{d}t/\mathrm{d}\boldsymbol{\tau}$ in terms of $\mathrm{d}r/\mathrm{d}t$, $\mathrm{d}\phi/\mathrm{d}t$, and $\mathrm{d}z/\mathrm{d}t$. The expression may also depend on the constants c and ω. Be sure to note that your answer should depend on the derivatives of t, ϕ, and z with respect to t, not $\boldsymbol{\tau}$. *(Hint: first find an expression for* $\mathrm{d}\boldsymbol{\tau}/\mathrm{d}t$*, in terms of the quantities indicated, and then ask yourself how this result can be used to find* $\mathrm{d}t/\mathrm{d}\boldsymbol{\tau}$*.)*

*PROBLEM 16: CIRCULAR ORBITS IN A SCHWARZSCHILD METRIC

The Schwarzschild metric, which describes the external gravitational field of any spherically symmetric distribution of mass, is given by

$$ds^2 = -c^2 d\boldsymbol{\tau}^2 = -\left(1-\frac{2GM}{rc^2}\right)c^2dt^2 + \left(1-\frac{2GM}{rc^2}\right)^{-1}dr^2 + r^2d\theta^2 + r^2\sin^2\theta\, d\phi^2 ,$$

where M is the total mass of the object, $0 \le \theta \le \pi$, $0 \le \phi < 2\pi$, and $\phi = 2\pi$ is identified with $\phi = 0$. We will be concerned only with motion outside the Schwarzschild horizon $R_S = 2GM/c^2$, so we can take $r > R_S$. (This restriction allows us to avoid the complications of understanding the effects of the singularity at $r = R_S$.) In this problem we will use the geodesic equation to calculate the behavior of circular orbits in this metric. We will assume a perfectly circular orbit in the x-y plane: the radial coordinate r is fixed, $\theta = 90°$, and $\phi = \omega t$, for some angular velocity ω.

(a) Use the metric to find the proper time interval $d\boldsymbol{\tau}$ for a segment of the path corresponding to a coordinate time interval dt. Note that $d\boldsymbol{\tau}$ represents the time that would actually be measured by a clock moving with the orbiting body. Your result should show that

$$\frac{d\boldsymbol{\tau}}{dt} = \sqrt{1-\frac{2GM}{rc^2}-\frac{r^2\omega^2}{c^2}} .$$

Note that for $M = 0$ this reduces to the special relativistic relation $d\tau/dt = \sqrt{1 - v^2/c^2}$, but the extra term proportional to M describes an effect that is new with general relativity— the gravitational field causes clocks to slow down, just as motion does.

(b) Show that the geodesic equation of motion (Eq. (5.52)) for one of the coordinates takes the form

$$0 = \frac{1}{2}\frac{\partial g_{\phi\phi}}{\partial r}\left(\frac{d\phi}{d\tau}\right)^2 + \frac{1}{2}\frac{\partial g_{tt}}{\partial r}\left(\frac{dt}{d\tau}\right)^2 .$$

(c) Show that the above equation implies

$$r\left(\frac{d\phi}{d\tau}\right)^2 = \frac{GM}{r^2}\left(\frac{dt}{d\tau}\right)^2 ,$$

which in turn implies that

$$r\omega^2 = \frac{GM}{r^2} .$$

Thus, the relation between r and ω is exactly the same as in Newtonian mechanics. *[Note, however, that this does not really mean that general relativity has no effect. First, ω has been defined by $d\phi/dt$, where t is a time coordinate which is not the same as the proper time τ that would be measured by a clock on the orbiting body. Second, r does not really have the same meaning as in the Newtonian calculation, since it is not the measured distance from the center of motion. Measured distances, you will recall, are calculated by integrating the metric, as for example in Problem 4 of Problem Set 4, A Circle in a Non-Euclidean Geometry. Since the angular ($d\theta^2$ and $d\phi^2$) terms in the Schwarzschild metric are unaffected by the mass, however, it can be seen that the circumference of the circle is equal to $2\pi r$, as in the Newtonian calculation.]*

(d) *(For 3 points extra credit)* Show that circular orbits around a black hole have a minimum value of the radial coordinate r, which is larger than R_S. What is it?

PROBLEM 17: THE STABILITY OF SCHWARZSCHILD ORBITS *(30 points)*

This problem was Problem 4, Quiz 2 in 2007. I have modified the reference to the homework problem to correspond to the current (2011) context, where it is Problem 16 of these review problems. In 2007 it had been a homework problem prior to the quiz.

This problem is an elaboration of the previous problem, Problem 16, for which both the statement and the solution are reproduced at the end of this quiz. This

material is reproduced for your reference, but you should be aware that the solution to the present problem has important differences. You can copy from this material, but to allow the grader to assess your understanding, you are expected to present a logical, self-contained answer to this question.

In the solution to that homework problem, it was stated that further analysis of the orbits in a Schwarzschild geometry shows that the smallest *stable* circular orbit occurs for $r = 3R_S$. Circular orbits are possible for $\frac{3}{2}R_S < r < 3R_S$, but they are not stable. In this problem we will explore the calculations behind this statement.

We will consider a body which undergoes small oscillations about a circular orbit at $r(t) = r_0$, $\theta = \pi/2$, where r_0 is a constant. The coordinate θ will therefore be fixed, but all the other coordinates will vary as the body follows its orbit.

(a) *(12 points)* The first step, since $r(\tau)$ will not be a constant in this solution, will be to derive the equation of motion for $r(\tau)$. That is, for the Schwarzschild metric

$$ds^2 = -c^2 d\tau^2 = -h(r)c^2 dt^2 + h(r)^{-1} dr^2 + r^2 d\theta^2 + r^2 \sin^2\theta \, d\phi^2 \ , \qquad \text{(P17.1)}$$

where

$$h(r) \equiv 1 - \frac{R_S}{r} \ ,$$

work out the explicit form of the geodesic equation

$$\frac{d}{d\tau}\left[g_{\mu\nu}\frac{dx^\nu}{d\tau}\right] = \frac{1}{2}\frac{\partial g_{\lambda\sigma}}{\partial x^\mu}\frac{dx^\lambda}{d\tau}\frac{dx^\sigma}{d\tau} \ , \qquad \text{(P17.2)}$$

for the case $\mu = r$. You should use this result to find an explicit expression for

$$\frac{d^2 r}{d\tau^2} \ .$$

You may allow your answer to contain $h(r)$, its derivative $h'(r)$ with respect to r, and the derivative with respect to τ of any coordinate, including $dt/d\tau$.

(b) *(6 points)* It is useful to consider r and ϕ to be the independent variables, while treating t as a dependent variable. Find an expression for

$$\left(\frac{dt}{d\tau}\right)^2$$

in terms of r, $dr/d\tau$, $d\phi/d\tau$, $h(r)$, and c. Use this equation to simplify the expression for $d^2r/d\tau^2$ obtained in part (a). The goal is to obtain an expression of the form

$$\frac{d^2r}{d\tau^2} = f_0(r) + f_1(r)\left(\frac{d\phi}{d\tau}\right)^2 . \tag{P17.3}$$

where the functions $f_0(r)$ and $f_1(r)$ might depend on R_S or c, and might be positive, negative, or zero. Note that the intermediate steps in the calculation involve a term proportional to $(dr/d\tau)^2$, but the net coefficient for this term vanishes.

(c) *(7 points)* To understand the orbit we will also need the equation of motion for ϕ. Evaluate the geodesic equation (P17.2) for $\mu = \phi$, and write the result in terms of the quantity L, defined by

$$L \equiv r^2 \frac{d\phi}{d\tau} . \tag{P17.4}$$

(d) *(5 points)* Finally, we come to the question of stability. Substituting Eq. (P17.4) into Eq. (P17.3), the equation of motion for r can be written as

$$\frac{d^2r}{d\tau^2} = f_0(r) + f_1(r)\frac{L^2}{r^4} .$$

Now consider a small perturbation about the circular orbit at $r = r_0$, and write an equation that determines the stability of the orbit. (That is, if some external force gives the orbiting body a small kick in the radial direction, how can you determine whether the perturbation will lead to stable oscillations, or whether it will start to grow?) You should express the stability requirement in terms of the unspecified functions $f_0(r)$ and $f_1(r)$. You are NOT asked to carry out the algebra of inserting the explicit forms that you have found for these functions.

SOLUTIONS

PROBLEM 1: DID YOU DO THE READING?

(a) This is a total trick question. Lepton number is, of course, conserved, so the factor is just 1. See Weinberg chapter 4, pages 91-4.

(b) The correct answer is (i). The others are all real reasons why it's hard to measure, although Weinberg's book emphasizes reason (v) a bit more than modern astrophysicists do: astrophysicists have been looking for other ways that deuterium might be produced, but no significant mechanism has been found. See Weinberg chapter 5, pages 114-7.

(c) The most obvious answers would be proton, neutron, and pi meson. However, there are many other possibilities, including many that were not mentioned by Weinberg. See Weinberg chapter 7, pages 136-8.

(d) The correct answers were the $\boxed{\text{neutrino}}$ and the $\boxed{\text{antiproton.}}$ The neutrino was first hypothesized by Wolfgang Pauli in 1932 (in order to explain the kinematics of beta decay), and first detected in the 1950s. After the positron was discovered in 1932, the antiproton was thought likely to exist, and the Bevatron in Berkeley was built to look for antiprotons. It made the first detection in the 1950s.

(e) The correct answers were $\boxed{\text{(ii), (v) and (vi).}}$ The others were incorrect for the following reasons:

(i) the earliest prediction of the CMB temperature, by Alpher and Herman in 1948, was 5 degrees, not 0.1 degrees.

(iii) Weinberg quotes his experimental colleagues as saying that the 3° K radiation could have been observed "long before 1965, probably in the mid-1950s and perhaps even in the mid-1940s." To Weinberg, however, the historically interesting question is not when the radiation could have been observed, but why radio astronomers did not know that they ought to try.

(iv) Weinberg argues that physicists at the time did not pay attention to either the steady state model or the big bang model, as indicated by the sentence in item (v) which is a direct quote from the book: "It was extraordinarily difficult for physicists to take seriously *any* theory of the early universe".

PROBLEM 2: DID YOU DO THE READING? *(24 points)*

(a) *(6 points)* In 1948 Ralph A. Alpher and Robert Herman wrote a paper predicting a cosmic microwave background with a temperature of 5 K. The paper was based on a cosmological model that they had developed with George Gamow, in which the early universe was assumed to have been filled with hot neutrons. As the universe expanded and cooled the neutrons underwent beta decay into protons, electrons, and antineutrinos, until at some point the universe cooled enough for light elements to be synthesized. Alpher and Herman found that to account for the observed present abundances of light elements, the ratio of photons to nuclear particles must have been about 10^9. Although the predicted temperature was very close to the actual value of 2.7 K, the theory differed from our present theory in two ways. Circle the two correct statements in the following list. (3 points for each right answer; circle at most 2.)

(i) Gamow, Alpher, and Herman assumed that the neutron could decay, but now the neutron is thought to be absolutely stable.

$\boxed{\text{(ii)}}$ In the current theory, the universe started with nearly equal densities of protons and neutrons, not all neutrons as Gamow, Alpher, and Herman assumed.

(iii) In the current theory, the universe started with mainly alpha particles, not all neutrons as Gamow, Alpher, and Herman assumed. (Note: an alpha particle is the nucleus of a helium atom, composed of two protons and two neutrons.)

$\boxed{\text{(iv)}}$ In the current theory, the conversion of neutrons into protons (and vice versa) took place mainly through collisions with electrons, positrons, neutrinos, and antineutrinos, not through the decay of the neutrons.

(v) The ratio of photons to nuclear particles in the early universe is now believed to have been about 10^3, not 10^9 as Alpher and Herman concluded.

(b) *(6 points)* In Weinberg's "Recipe for a Hot Universe," he described the primordial composition of the universe in terms of three conserved quantities: electric charge, baryon number, and lepton number. If electric charge is measured in units of the electron charge, then all three quantities are integers for which the number density can be compared with the number density of photons. For each quantity, which choice most accurately describes the initial ratio of the number density of this quantity to the number density of photons:

Electric Charge:	(i) $\sim 10^9$	(ii) ~ 1000	(iii) ~ 1
	(iv) $\sim 10^{-6}$	$\boxed{\text{(v) either zero or negligible}}$	
Baryon Number:	(i) $\sim 10^{-20}$	$\boxed{\text{(ii) } \sim 10^{-9}}$	(iii) $\sim 10^{-6}$
	(iv) ~ 1	(v) anywhere from 10^{-5} to 1	
Lepton Number:	(i) $\sim 10^9$	(ii) ~ 1000	(iii) ~ 1
	(iv) $\sim 10^{-6}$	(v) could be as high as ~ 1, but is assumed to be very small	

(c) *(12 points)* The figure below comes from Weinberg's Chapter 5, and is labeled *The Shifting Neutron-Proton Balance.*

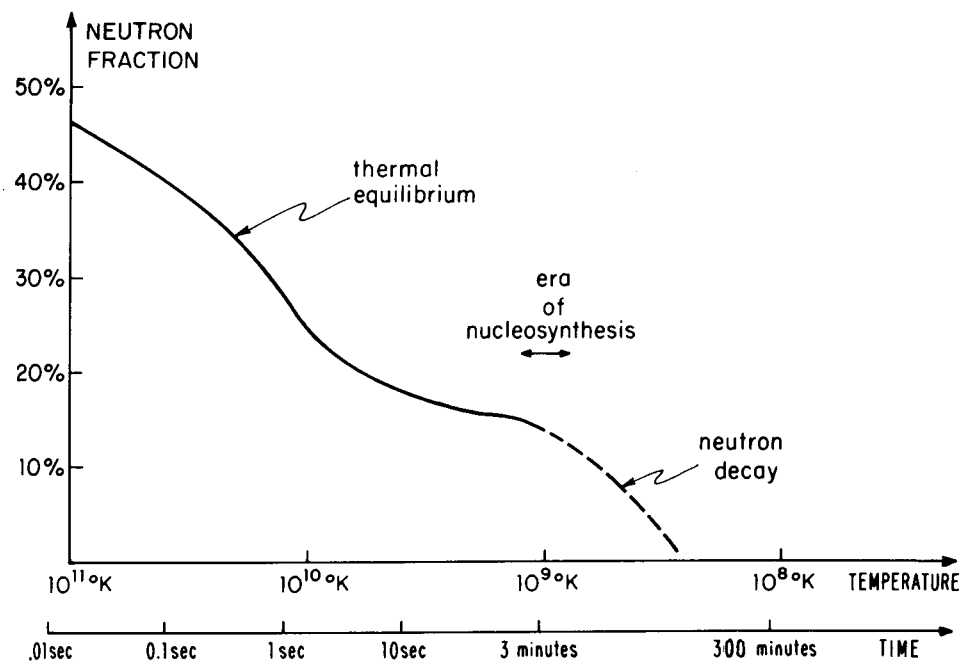

(i) *(3 points)* During the period labeled "thermal equilibrium," the neutron fraction is changing because (choose one):

(A) The neutron is unstable, and decays into a proton, electron, and antineutrino with a lifetime of about 1 second.

(B) The neutron is unstable, and decays into a proton, electron, and antineutrino with a lifetime of about 15 seconds.

(C) The neutron is unstable, and decays into a proton, electron, and antineutrino with a lifetime of about 15 minutes.

(D) Neutrons and protons can be converted from one into through reactions such as

$$\text{antineutrino} + \text{proton} \longleftrightarrow \text{electron} + \text{neutron}$$
$$\text{neutrino} + \text{neutron} \longleftrightarrow \text{positron} + \text{proton}.$$

$\boxed{\text{(E)}}$ Neutrons and protons can be converted from one into the other through reactions such as

$$\text{antineutrino} + \text{proton} \longleftrightarrow \text{positron} + \text{neutron}$$
$$\text{neutrino} + \text{neutron} \longleftrightarrow \text{electron} + \text{proton}.$$

(F) Neutrons and protons can be created and destroyed by reactions such as

$$\text{proton} + \text{neutrino} \longleftrightarrow \text{positron} + \text{antineutrino}$$
$$\text{neutron} + \text{antineutrino} \longleftrightarrow \text{electron} + \text{positron}.$$

(ii) *(3 points)* During the period labeled "neutron decay," the neutron fraction is changing because (choose one):

(A) The neutron is unstable, and decays into a proton, electron, and antineutrino with a lifetime of about 1 second.

(B) The neutron is unstable, and decays into a proton, electron, and antineutrino with a lifetime of about 15 seconds.

$\boxed{\text{(C)}}$ The neutron is unstable, and decays into a proton, electron, and antineutrino with a lifetime of about 15 minutes.

(D) Neutrons and protons can be converted from one into the other through reactions such as

$$\text{antineutrino} + \text{proton} \longleftrightarrow \text{electron} + \text{neutron}$$
$$\text{neutrino} + \text{neutron} \longleftrightarrow \text{positron} + \text{proton}.$$

(E) Neutrons and protons can be converted from one into the other through reactions such as

$$\text{antineutrino} + \text{proton} \longleftrightarrow \text{positron} + \text{neutron}$$
$$\text{neutrino} + \text{neutron} \longleftrightarrow \text{electron} + \text{proton}.$$

(F) Neutrons and protons can be created and destroyed by reactions such as

$$\text{proton} + \text{neutrino} \longleftrightarrow \text{positron} + \text{antineutrino}$$
$$\text{neutron} + \text{antineutrino} \longleftrightarrow \text{electron} + \text{positron}.$$

(iii) *(3 points)* The masses of the neutron and proton are not exactly equal, but instead

(A) The neutron is more massive than a proton with a rest energy difference of 1.293 GeV (1 GeV = 10^9 eV).

$\boxed{\text{(B)}}$ The neutron is more massive than a proton with a rest energy difference of 1.293 MeV (1 MeV = 10^6 eV).

(C) The neutron is more massive than a proton with a rest energy difference of 1.293 KeV (1 KeV = 10^3 eV).

(D) The proton is more massive than a neutron with a rest energy difference of 1.293 GeV.

(E) The proton is more massive than a neutron with a rest energy difference of 1.293 MeV.

(F) The proton is more massive than a neutron with a rest energy difference of 1.293 KeV.

(iv) *(3 points)* During the period labeled "era of nucleosynthesis," (choose one:)

$\boxed{\text{(A)}}$ Essentially all the neutrons present combine with protons to form helium nuclei, which mostly survive until the present time.

(B) Essentially all the neutrons present combine with protons to form deuterium nuclei, which mostly survive until the present time.

(C) About half the neutrons present combine with protons to form helium nuclei, which mostly survive until the present time, and the other half of the neutrons remain free.

(D) About half the neutrons present combine with protons to form deuterium nuclei, which mostly survive until the present time, and the other half of the neutrons remain free.

(E) Essentially all the protons present combine with neutrons to form helium nuclei, which mostly survive until the present time.

(F) Essentially all the protons present combine with neutrons to form deuterium nuclei, which mostly survive until the present time.

PROBLEM 3: EVOLUTION OF AN OPEN UNIVERSE

The evolution of an open, matter-dominated universe is described by the following parametric equations:

$$ct = \alpha(\sinh\theta - \theta)$$

$$\frac{a}{\sqrt{\kappa}} = \alpha(\cosh\theta - 1) \ .$$

Evaluating the second of these equations at $a/\sqrt{\kappa} = 2\alpha$ yields a solution for θ:

$$2\alpha = \alpha(\cosh\theta - 1) \quad \Longrightarrow \quad \cosh\theta = 3 \quad \Longrightarrow \quad \theta = \cosh^{-1}(3) \ .$$

We can use these results in the first equation to solve for t. Noting that

$$\sinh\theta = \sqrt{\cosh^2\theta - 1} = \sqrt{8} = 2\sqrt{2} \ ,$$

we have

$$\boxed{t = \frac{\alpha}{c}\left[2\sqrt{2} - \cosh^{-1}(3)\right] \ .}$$

Numerically, $t \approx 1.06567\,\alpha/c$.

PROBLEM 4: ANTICIPATING A BIG CRUNCH

The critical density is given by

$$\rho_c = \frac{3H_0^2}{8\pi G} \ ,$$

so the mass density is given by

$$\rho = \Omega_0\rho_c = 2\rho_c = \frac{3H_0^2}{4\pi G} \ . \tag{S4.1}$$

Substituting this relation into

$$H_0^2 = \frac{8\pi}{3}G\rho - \frac{kc^2}{a^2} \ ,$$

we find

$$H_0^2 = 2H_0^2 - \frac{kc^2}{a^2} \ ,$$

from which it follows that

$$\frac{a}{\sqrt{k}} = \frac{c}{H_0} \ . \tag{S4.2}$$

Now use

$$\alpha = \frac{4\pi}{3}\frac{G\rho a^3}{k^{3/2}c^2} \ .$$

Substituting the values we have from Eqs. (S4.1) and (S4.2) for ρ and $a/\sqrt{k}$, we have

$$\alpha = \frac{c}{H_0} \ . \tag{S4.3}$$

To determine the value of the parameter θ, use

$$\frac{a}{\sqrt{k}} = \alpha(1 - \cos\theta) \ ,$$

which when combined with Eqs. (S4.2) and (S4.3) implies that $\cos\theta = 0$. The equation $\cos\theta = 0$ has multiple solutions, but we know that the θ-parameter for a closed matter-dominated universe varies between 0 and π during the expansion phase of the universe. Within this range, $\cos\theta = 0$ implies that $\theta = \pi/2$. Thus, the age of the universe at the time these measurements are made is given by

$$\begin{aligned} t &= \frac{\alpha}{c}(\theta - \sin\theta) \\ &= \frac{1}{H_0}\left(\frac{\pi}{2} - 1\right) \ . \end{aligned}$$

The total lifetime of the closed universe corresponds to $\theta = 2\pi$, or

$$t_{\text{final}} = \frac{2\pi\alpha}{c} = \frac{2\pi}{H_0} \ ,$$

so the time remaining before the big crunch is given by

$$t_{\text{final}} - t = \frac{1}{H_0}\left[2\pi - \left(\frac{\pi}{2} - 1\right)\right] = \boxed{\left(\frac{3\pi}{2} + 1\right)\frac{1}{H_0} \ .}$$

PROBLEM 5: TRACING LIGHT RAYS IN A CLOSED, MATTER-DOMINATED UNIVERSE

(a) Since $\theta = \phi =$ constant, $d\theta = d\phi = 0$, and for light rays one always has $d\tau = 0$. The line element therefore reduces to

$$0 = -c^2\, dt^2 + a^2(t) d\psi^2 \ .$$

Rearranging gives

$$\left(\frac{d\psi}{dt}\right)^2 = \frac{c^2}{a^2(t)} \ ,$$

which implies that

$$\boxed{\frac{d\psi}{dt} = \pm\frac{c}{a(t)} \ .}$$

The plus sign describes outward radial motion, while the minus sign describes inward motion.

(b) The maximum value of the ψ coordinate that can be reached by time t is found by integrating its rate of change:

$$\psi_{\rm hor} = \int_0^t \frac{c}{a(t')} dt' \ .$$

The physical horizon distance is the proper length of the shortest line drawn at the time t from the origin to $\psi = \psi_{\rm hor}$, which according to the metric is given by

$$\ell_{\rm phys}(t) = \int_{\psi=0}^{\psi=\psi_{\rm hor}} ds = \int_0^{\psi_{\rm hor}} a(t)\, d\psi = \boxed{a(t) \int_0^t \frac{c}{a(t')} dt' \ .}$$

(c) From part (a),

$$\frac{d\psi}{dt} = \frac{c}{a(t)} \ .$$

By differentiating the equation $ct = \alpha(\theta - \sin\theta)$ stated in the problem, one finds

$$\frac{dt}{d\theta} = \frac{\alpha}{c}(1 - \cos\theta) \ .$$

Then

$$\frac{d\psi}{d\theta} = \frac{d\psi}{dt}\frac{dt}{d\theta} = \frac{\alpha(1-\cos\theta)}{a(t)} \ .$$

Then using $a = \alpha(1 - \cos\theta)$, as stated in the problem, one has the very simple result

$$\boxed{\frac{d\psi}{d\theta} = 1 \ .}$$

(d) This part is very simple if one knows that ψ must change by 2π before the photon returns to its starting point. Since $d\psi/d\theta = 1$, this means that θ must also change by 2π. From $a = \alpha(1 - \cos\theta)$, one can see that a returns to zero at $\theta = 2\pi$, so this is exactly the lifetime of the universe. So,

$$\boxed{\frac{\text{Time for photon to return}}{\text{Lifetime of universe}} = 1 \ .}$$

If it is not clear why ψ must change by 2π for the photon to return to its starting point, then recall the construction of the closed universe that was used in Lecture Notes 5. The closed universe is described as the 3-dimensional surface of a sphere in a four-dimensional Euclidean space with coordinates (x, y, z, w):

$$x^2 + y^2 + z^2 + w^2 = a^2 \ ,$$

where a is the radius of the sphere. The Robertson-Walker coordinate system is constructed on the 3-dimensional surface of the sphere, taking the point $(0, 0, 0, 1)$ as the center of the coordinate system. If we define the w-direction as "north," then the point $(0, 0, 0, 1)$ can be called the north pole. Each point (x, y, z, w) on the surface of the sphere is assigned a coordinate ψ, defined to be the angle between the positive w axis and the vector (x, y, z, w). Thus $\psi = 0$ at the north pole, and $\psi = \pi$ for the antipodal point, $(0, 0, 0, -1)$, which can be called the south pole. In making the round trip the photon must travel from the north pole to the south pole and back, for a total range of 2π.

Discussion: Some students answered that the photon would return in the lifetime of the universe, but reached this conclusion without considering the details of the motion. The argument was simply that, at the big crunch when the scale factor returns to zero, all distances would return to zero, including the distance between the photon and its starting place. This statement is correct, but it does not quite answer the question. First, the statement in no way rules out the possibility that the photon might return to its starting point before the big crunch. Second, if we use the delicate but well-motivated definitions that general relativists use, it is not necessarily true that the photon returns to its starting point at the big crunch. To be concrete, let me consider a radiation-dominated closed universe—a hypothetical universe for which the only "matter" present

consists of massless particles such as photons or neutrinos. In that case (you can check my calculations) a photon that leaves the north pole at $t = 0$ just reaches the south pole at the big crunch. It might seem that reaching the south pole at the big crunch is not any different from completing the round trip back to the north pole, since the distance between the north pole and the south pole is zero at $t = t_{\text{Crunch}}$, the time of the big crunch. However, suppose we adopt the principle that the instant of the initial singularity and the instant of the final crunch are both too singular to be considered part of the spacetime. We will allow ourselves to mathematically consider times ranging from $t = \epsilon$ to $t = t_{\text{Crunch}} - \epsilon$, where ϵ is arbitrarily small, but we will not try to describe what happens exactly at $t = 0$ or $t = t_{\text{Crunch}}$. Thus, we now consider a photon that starts its journey at $t = \epsilon$, and we follow it until $t = t_{\text{Crunch}} - \epsilon$. For the case of the matter-dominated closed universe, such a photon would traverse a fraction of the full circle that would be almost 1, and would approach 1 as $\epsilon \to 0$. By contrast, for the radiation-dominated closed universe, the photon would traverse a fraction of the full circle that is almost $1/2$, and it would approach $1/2$ as $\epsilon \to 0$. Thus, from this point of view the two cases look very different. In the radiation-dominated case, one would say that the photon has come only half-way back to its starting point.

PROBLEM 6: LENGTHS AND AREAS IN A TWO-DIMENSIONAL METRIC

a) Along the first segment $d\theta = 0$, so $ds^2 = (1 + ar)^2\, dr^2$, or $ds = (1 + ar)\, dr$. Integrating, the length of the first segment is found to be

$$S_1 = \int_0^{r_0} (1 + ar)\, dr = r_0 + \frac{1}{2} a r_0^2 \ .$$

Along the second segment $dr = 0$, so $ds = r(1 + br)\, d\theta$, where $r = r_0$. So the length of the second segment is

$$S_2 = \int_0^{\pi/2} r_0 (1 + b r_0)\, d\theta = \frac{\pi}{2} r_0 (1 + b r_0) \ .$$

Finally, the third segment is identical to the first, so $S_3 = S_1$. The total length is then

$$S = 2S_1 + S_2 = 2\left(r_0 + \frac{1}{2} a r_0^2\right) + \frac{\pi}{2} r_0 (1 + b r_0)$$

$$= \boxed{\left(2 + \frac{\pi}{2}\right) r_0 + \frac{1}{2}(2a + \pi b) r_0^2 \ .}$$

b) To find the area, it is best to divide the region into concentric strips as shown:

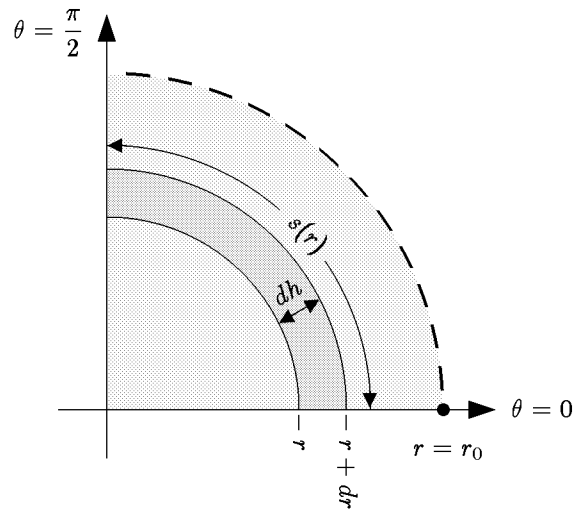

Note that the strip has a coordinate width of dr, but the distance across the width of the strip is determined by the metric to be

$$dh = (1 + ar)\, dr \ .$$

The length of the strip is calculated the same way as S_2 in part (a):

$$s(r) = \frac{\pi}{2} r(1 + br) \ .$$

The area is then

$$dA = s(r)\, dh \ ,$$

so

$$\begin{aligned} A &= \int_0^{r_0} s(r)\, dh \\ &= \int_0^{r_0} \frac{\pi}{2} r(1 + br)(1 + ar)\, dr \\ &= \frac{\pi}{2} \int_0^{r_0} \left[r + (a + b) r^2 + abr^3 \right] dr \\ &= \boxed{\frac{\pi}{2} \left[\frac{1}{2} r_0^2 + \frac{1}{3}(a + b) r_0^3 + \frac{1}{4} abr_0^4 \right]} \end{aligned}$$

PROBLEM 7: GEOMETRY IN A CLOSED UNIVERSE

(a) As one moves along a line from the origin to $(h, 0, 0)$, there is no variation in θ or ϕ. So $d\theta = d\phi = 0$, and

$$ds = \frac{a\,dr}{\sqrt{1-r^2}} \ .$$

So

$$\boxed{\ell_p = \int_0^h \frac{a\,dr}{\sqrt{1-r^2}} = a \sin^{-1} h \ .}$$

(b) In this case it is only θ that varies, so $dr = d\phi = 0$. So

$$ds = ar\,d\theta \ ,$$

so

$$\boxed{s_p = ah\,\Delta\theta \ .}$$

(c) From part (a), one has

$$h = \sin(\ell_p/a) \ .$$

Inserting this expression into the answer to (b), and then solving for $\Delta\theta$, one has

$$\boxed{\Delta\theta = \frac{s_p}{a \sin(\ell_p/a)} \ .}$$

Note that as $a \to \infty$, this approaches the Euclidean result, $\Delta\theta = s_p/\ell_p$.

PROBLEM 8: THE GENERAL SPHERICALLY SYMMETRIC METRIC

(a) The metric is given by

$$ds^2 = dr^2 + \rho^2(r)\left[d\theta^2 + \sin^2\theta\,d\phi^2\right] \ .$$

The radius a is defined as the physical length of a radial line which extends from the center to the boundary of the sphere. The length of a path is just the integral of ds, so

$$a = \int_{\substack{\text{radial path from}\\ \text{origin to } r_0}} ds \ .$$

The radial path is at a constant value of θ and ϕ, so $d\theta = d\phi = 0$, and then $ds = dr$. So

$$a = \int_0^{r_0} dr = \boxed{r_0 \ .}$$

(b) On the surface $r = r_0$, so $dr \equiv 0$. Then

$$ds^2 = \rho^2(r_0)\left[d\theta^2 + \sin^2\theta\, d\phi^2\right] \ .$$

To find the area element, consider first a path obtained by varying only θ. Then $ds = \rho(r_0)\, d\theta$. Similarly, a path obtained by varying only ϕ has length $ds = \rho(r_0)\sin\theta\, d\phi$. Furthermore, these two paths are perpendicular to each other, a fact that is incorporated into the metric by the absence of a $dr\, d\theta$ term. Thus, the area of a small rectangle constructed from these two paths is given by the product of their lengths, so

$$dA = \rho^2(r_0)\sin\theta\, d\theta\, d\phi \ .$$

The area is then obtained by integrating over the range of the coordinate variables:

$$\begin{aligned} A &= \rho^2(r_0)\int_0^{2\pi} d\phi \int_0^{\pi} \sin\theta\, d\theta \\ &= \rho^2(r_0)(2\pi)\left(-\cos\theta\Big|_0^{\pi}\right) \\ \Longrightarrow \quad & \boxed{A = 4\pi\rho^2(r_0) \ .} \end{aligned}$$

As a check, notice that if $\rho(r) = r$, then the metric becomes the metric of Euclidean space, in spherical polar coordinates. In this case the answer above becomes the well-known formula for the area of a Euclidean sphere, $4\pi r^2$.

(c) As in Problem 5 of Problem Set 4, we can imagine breaking up the volume into spherical shells of infinitesimal thickness, with a given shell extending from r to $r + dr$. By the previous calculation, the area of such a shell is $A(r) = 4\pi\rho^2(r)$. (In the previous part we considered only the case $r = r_0$, but the same argument applies for any value of r.) The thickness of the shell is just the path length ds of a radial path corresponding to the coordinate interval dr. For radial paths the metric reduces to $ds^2 = dr^2$, so the thickness of the shell is $ds = dr$. The volume of the shell is then

$$dV = 4\pi\rho^2(r)\, dr \ .$$

The total volume is then obtained by integration:

$$\boxed{V = 4\pi \int_0^{r_0} \rho^2(r)\, dr \ .}$$

Checking the answer for the Euclidean case, $\rho(r) = r$, one sees that it gives $V = (4\pi/3)r_0^3$, as expected.

(d) If r is replaced by a new coordinate $\sigma \equiv r^2$, then the infinitesimal variations of the two coordinates are related by

$$\frac{d\sigma}{dr} = 2r = 2\sqrt{\sigma} \ ,$$

so

$$dr^2 = \frac{d\sigma^2}{4\sigma} \ .$$

The function $\rho(r)$ can then be written as $\rho(\sqrt{\sigma})$, so

$$\boxed{ds^2 = \frac{d\sigma^2}{4\sigma} + \rho^2(\sqrt{\sigma})\left[d\theta^2 + \sin^2\theta\, d\phi^2\right] \ .}$$

PROBLEM 9: VOLUMES IN A ROBERTSON-WALKER UNIVERSE

The product of differential length elements corresponding to infinitesimal changes in the coordinates r, θ and ϕ equals the differential volume element dV. Therefore

$$dV = a(t)\frac{dr}{\sqrt{1-kr^2}} \times a(t) r d\theta \times a(t) r \sin\theta d\phi$$

The total volume is then

$$V = \int dV = a^3(t) \int_0^{r_{\max}} dr \int_0^{\pi} d\theta \int_0^{2\pi} d\phi \frac{r^2 \sin\theta}{\sqrt{1-kr^2}}$$

We can do the angular integrations immediately:

$$\boxed{V = 4\pi a^3(t) \int_0^{r_{max}} \frac{r^2 dr}{\sqrt{1-kr^2}} \ .}$$

[Pedagogical Note: If you don't see through the solutions above, then note that the volume of the sphere can be determined by integration, after first breaking the volume into infinitesimal cells. A generic cell is shown in the diagram below:

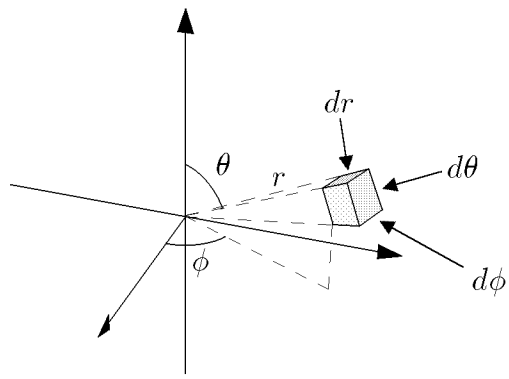

The cell includes the volume lying between r and $r + dr$, between θ and $\theta + d\theta$, and between ϕ and $\phi + d\phi$. In the limit as dr, $d\theta$, and $d\phi$ all approach zero, the cell approaches a rectangular solid with sides of length:

$$ds_1 = a(t)\frac{dr}{\sqrt{1-kr^2}}$$

$$ds_2 = a(t)r\,d\theta$$

$$ds_3 = a(t)r\sin\theta\,d\theta\ .$$

Here each ds is calculated by using the metric to find ds^2, in each case allowing only one of the quantities dr, $d\theta$, or $d\phi$ to be nonzero. The infinitesimal volume element is then $dV = ds_1 ds_2 ds_3$, resulting in the answer above. The derivation relies on the orthogonality of the dr, $d\theta$, and $d\phi$ directions; the orthogonality is implied by the metric, which otherwise would contain cross terms such as $dr\,d\theta$.]

[Extension: The integral can in fact be carried out, using the substitution

$$\sqrt{k}\,r = \sin\psi \quad (\text{if } k > 0)$$

$$\sqrt{-k}\,r = \sinh\psi \quad (\text{if } k > 0).$$

The answer is

$$V = \begin{cases} 2\pi a^3(t)\left[\dfrac{\sin^{-1}\left(\sqrt{k}\,r_{\max}\right)}{k^{3/2}} - \dfrac{\sqrt{1-kr_{\max}^2}}{k}\right] & (\text{if } k > 0) \\ 2\pi a^3(t)\left[\dfrac{\sqrt{1-kr_{\max}^2}}{(-k)} - \dfrac{\sinh^{-1}\left(\sqrt{-k}\,r_{\max}\right)}{(-k)^{3/2}}\right] & (\text{if } k < 0) \end{cases} \quad .]$$

PROBLEM 10: THE SCHWARZSCHILD METRIC

a) The Schwarzschild horizon is the value of r for which the metric becomes singular. Since the metric contains the factor

$$\left(1 - \frac{2GM}{rc^2}\right) ,$$

it becomes singular at

$$\boxed{R_S = \frac{2GM}{c^2} .}$$

b) The separation between A and B is purely in the radial direction, so the proper length of a segment along the path joining them is given by

$$ds^2 = \left(1 - \frac{2GM}{rc^2}\right)^{-1} dr^2 ,$$

so

$$ds = \frac{dr}{\sqrt{1 - \frac{2GM}{rc^2}}} .$$

The proper distance from A to B is obtained by adding the proper lengths of all the segments along the path, so

$$\boxed{s_{AB} = \int_{r_A}^{r_B} \frac{dr}{\sqrt{1 - \frac{2GM}{rc^2}}} .}$$

EXTENSION: The integration can be carried out explicitly. First use the expression for the Schwarzschild radius to rewrite the expression for s_{AB} as

$$s_{AB} = \int_{r_A}^{r_B} \frac{\sqrt{r}\, dr}{\sqrt{r - R_S}} .$$

Then introduce the hyperbolic trigonometric substitution

$$r = R_S \cosh^2 u .$$

One then has

$$\sqrt{r - R_S} = \sqrt{R_S} \sinh u$$

$$dr = 2R_S \cosh u \sinh u \, du \ ,$$

and the indefinite integral becomes

$$\begin{aligned}
\int \frac{\sqrt{r}\, dr}{\sqrt{r - R_S}} &= 2R_S \int \cosh^2 u \, du \\
&= R_S \int (1 + \cosh 2u) du \\
&= R_S \left(u + \frac{1}{2} \sinh 2u \right) \\
&= R_S (u + \sinh u \, \cosh u) \\
&= R_S \sinh^{-1} \left(\sqrt{\frac{r}{R_S} - 1} \right) + \sqrt{r(r - R_S)} \ .
\end{aligned}$$

Thus,

$$\begin{aligned}
s_{AB} = R_S \left[\sinh^{-1} \left(\sqrt{\frac{r_B}{R_S} - 1} \right) - \sinh^{-1} \left(\sqrt{\frac{r_A}{R_S} - 1} \right) \right] \\
+ \sqrt{r_B(r_B - R_S)} - \sqrt{r_A(r_A - R_S)} \ .
\end{aligned}$$

c) A tick of the clock and the following tick are two events that differ only in their time coordinates. Thus, the metric reduces to

$$-c^2 d\boldsymbol{\tau}^2 = -\left(1 - \frac{2GM}{rc^2}\right) c^2 dt^2 \ ,$$

so

$$d\boldsymbol{\tau} = \sqrt{1 - \frac{2GM}{rc^2}}\, dt \ .$$

The reading on the observer's clock corresponds to the proper time interval $d\boldsymbol{\tau}$, so the corresponding interval of the coordinate t is given by

$$\boxed{\Delta t_A = \frac{\Delta \boldsymbol{\tau}_A}{\sqrt{1 - \frac{2GM}{r_A c^2}}} \ .}$$

d) Since the Schwarzschild metric does not change with time, each pulse leaving A will take the same length of time to reach B. Thus, the pulses emitted by A will arrive at B with a time coordinate spacing

$$\Delta t_B = \Delta t_A = \frac{\Delta \boldsymbol{\tau}_A}{\sqrt{1 - \frac{2GM}{r_A c^2}}} \ .$$

The clock at B, however, will read the proper time and not the coordinate time. Thus,

$$\Delta\tau_B = \sqrt{1 - \frac{2GM}{r_B c^2}}\,\Delta t_B$$

$$= \boxed{\sqrt{\frac{1 - \frac{2GM}{r_B c^2}}{1 - \frac{2GM}{r_A c^2}}}\,\Delta\tau_A\ .}$$

e) From parts (a) and (b), the proper distance between A and B can be rewritten as

$$s_{AB} = \int_{R_S}^{r_B} \frac{\sqrt{r}dr}{\sqrt{r - R_S}}\ .$$

The potentially divergent part of the integral comes from the range of integration in the immediate vicinity of $r = R_S$, say $R_S < r < R_S + \epsilon$. For this range the quantity $\sqrt{r}$ in the numerator can be approximated by $\sqrt{R_S}$, so the contribution has the form

$$\sqrt{R_S}\int_{R_S}^{R_S+\epsilon} \frac{dr}{\sqrt{r - R_S}}\ .$$

Changing the integration variable to $u \equiv r - R_S$, the contribution can be easily evaluated:

$$\sqrt{R_S}\int_{R_S}^{R_S+\epsilon} \frac{dr}{\sqrt{r - R_S}} = \sqrt{R_S}\int_0^{\epsilon} \frac{du}{\sqrt{u}} = 2\sqrt{R_S\epsilon} < \infty\ .$$

So, although the integrand is infinite at $r = R_S$, the integral is still finite.

$$\boxed{\text{The proper distance between } A \text{ and } B \text{ does not diverge.}}$$

Looking at the answer to part (d), however, one can see that when $r_A = R_S$,

$$\boxed{\text{The time interval } \Delta\tau_B \text{ diverges.}}$$

PROBLEM 11: GEODESICS

The geodesic equation for a curve $x^i(\lambda)$, where the parameter λ is the arc length along the curve, can be written as

$$\frac{d}{d\lambda}\left\{g_{ij}\frac{dx^j}{d\lambda}\right\} = \frac{1}{2}\left(\partial_i g_{k\ell}\right)\frac{dx^k}{d\lambda}\,\frac{dx^\ell}{d\lambda}\ .$$

Here the indices j, k, and ℓ are summed from 1 to the dimension of the space, so there is one equation for each value of i.

(a) The metric is given by

$$ds^2 = g_{ij}dx^i dx^j = dr^2 + r^2\,d\theta^2\ ,$$

so

$$g_{rr} = 1, \qquad g_{\theta\theta} = r^2\ , \qquad g_{r\theta} = g_{\theta r} = 0\ .$$

First taking $i = r$, the nonvanishing terms in the geodesic equation become

$$\frac{d}{d\lambda}\left\{g_{rr}\frac{dr}{d\lambda}\right\} = \frac{1}{2}\left(\partial_r g_{\theta\theta}\right)\frac{d\theta}{d\lambda}\,\frac{d\theta}{d\lambda}\ ,$$

which can be written explicitly as

$$\frac{d}{d\lambda}\left\{\frac{dr}{d\lambda}\right\} = \frac{1}{2}\left(\partial_r r^2\right)\left(\frac{d\theta}{d\lambda}\right)^2\ ,$$

or

$$\boxed{\frac{d^2r}{d\lambda^2} = r\left(\frac{d\theta}{d\lambda}\right)^2\ .}$$

For $i = \theta$, one has the simplification that g_{ij} is independent of θ for all (i,j). So

$$\boxed{\frac{d}{d\lambda}\left\{r^2\frac{d\theta}{d\lambda}\right\} = 0\ .}$$

(b) The first step is to parameterize the curve, which means to imagine moving along the curve, and expressing the coordinates as a function of the distance traveled. (I am calling the locus $y = 1$ a curve rather than a line, since the techniques that are used here are usually applied to curves. Since a line is a

special case of a curve, there is nothing wrong with treating the line as a curve.) In Cartesian coordinates, the curve $y = 1$ can be parameterized as

$$x(\lambda) = \lambda \ , \qquad y(\lambda) = 1 \ .$$

(The parameterization is not unique, because one can choose $\lambda = 0$ to represent any point along the curve.) Converting to the desired polar coordinates,

$$r(\lambda) = \sqrt{x^2(\lambda) + y^2(\lambda)} = \sqrt{\lambda^2 + 1} \ ,$$

$$\theta(\lambda) = \tan^{-1} \frac{y(\lambda)}{x(\lambda)} = \tan^{-1}(1/\lambda) \ .$$

Calculating the needed derivatives,*

$$\frac{dr}{d\lambda} = \frac{\lambda}{\sqrt{\lambda^2 + 1}}$$

$$\frac{d^2r}{d\lambda^2} = \frac{1}{\sqrt{\lambda^2 + 1}} - \frac{\lambda^2}{(\lambda^2 + 1)^{3/2}} = \frac{1}{(\lambda^2 + 1)^{3/2}} = \frac{1}{r^3}$$

$$\frac{d\theta}{d\lambda} = -\frac{1}{1 + \left(\frac{1}{\lambda}\right)^2} \frac{1}{\lambda^2} = -\frac{1}{r^2} \ .$$

Then, substituting into the geodesic equation for $i = r$,

$$\frac{d^2r}{d\lambda^2} = r \left(\frac{d\theta}{d\lambda}\right)^2 \Longleftrightarrow \frac{1}{r^3} = r \left(-\frac{1}{r^2}\right)^2 \ ,$$

which checks. Substituting into the geodesic equation for $i = \theta$,

$$\frac{d}{d\lambda} \left\{ r^2 \frac{d\theta}{d\lambda} \right\} = 0 \Longleftrightarrow \frac{d}{d\lambda} \left\{ r^2 \left(-\frac{1}{r^2}\right) \right\} = 0 \ ,$$

which also checks.

---

* If you do not remember how to differentiate $\phi = \tan^{-1}(z)$, then you should know how to derive it. Write $z = \tan\phi = \sin\phi / \cos\phi$, so

$$dz = \left(\frac{\cos\phi}{\cos\phi} + \frac{\sin^2\phi}{\cos^2\phi} \right) d\phi = (1 + \tan^2\phi) d\phi \ .$$

Then

$$\frac{d\phi}{dz} = \frac{1}{1 + \tan^2\phi} = \frac{1}{1 + z^2} \ .$$

PROBLEM 12: GEODESICS ON THE SURFACE OF A SPHERE

(a) Rotations are easy to understand in Cartesian coordinates. The relationship between the polar and Cartesian coordinates is given by

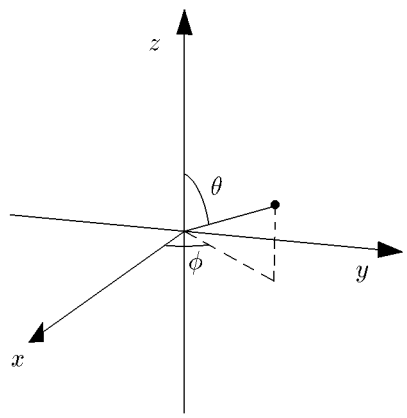

$$x = r\sin\theta\cos\phi$$
$$y = r\sin\theta\sin\phi$$
$$z = r\cos\theta \ .$$

The equator is then described by $\theta = \pi/2$, and $\phi = \psi$, where ψ is a parameter running from 0 to 2π. Thus, the equator is described by the curve $x^i(\psi)$, where

$$x^1 = x = r\cos\psi$$
$$x^2 = y = r\sin\psi$$
$$x^3 = z = 0 \ .$$

Now introduce a primed coordinate system that is related to the original system by a rotation in the y-z plane by an angle α:

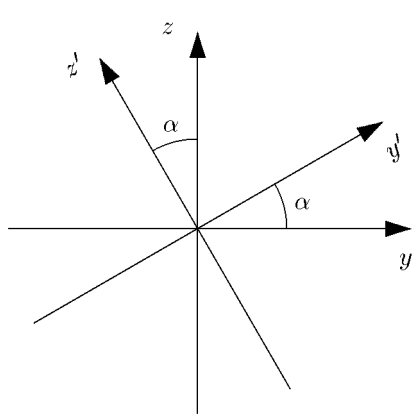

$$x = x'$$
$$y = y'\cos\alpha - z'\sin\alpha$$
$$z = z'\cos\alpha + y'\sin\alpha \ .$$

The rotated equator, which we seek to describe, is just the standard equator in the primed coordinates:

$$x' = r\cos\psi \ , \qquad y' = r\sin\psi \ , \qquad z' = 0 \ .$$

Using the relation between the two coordinate systems given above,

$$\begin{aligned} x &= r\cos\psi \\ y &= r\sin\psi\cos\alpha \\ z &= r\sin\psi\sin\alpha \ . \end{aligned}$$

Using again the relations between polar and Cartesian coordinates,

$$\boxed{\begin{aligned} \cos\theta &= \frac{z}{r} = \sin\psi\sin\alpha \\ \tan\phi &= \frac{y}{x} = \tan\psi\cos\alpha \ . \end{aligned}}$$

(b) A segment of the equator corresponding to an interval $d\psi$ has length $a\,d\psi$, so the parameter ψ is proportional to the arc length. Expressed in terms of the metric, this relationship becomes

$$ds^2 = g_{ij}\frac{dx^i}{d\psi}\frac{dx^j}{d\psi}d\psi^2 = a^2 d\psi^2 \ .$$

Thus the quantity

$$A \equiv g_{ij}\frac{dx^i}{d\psi}\frac{dx^j}{d\psi}$$

is equal to a^2, so the geodesic equation (5.50) reduces to the simpler form of Eq. (5.52). (Note that we are following the notation of Lecture Notes 5, except that the variable used to parameterize the path is called ψ, rather than λ or s. Although A is not equal to 1 as we assumed in Lecture Notes 5, it is easily seen that Eq. (5.52) follows from (5.50) provided only that $A = constant$.) Thus,

$$\frac{d}{d\psi}\left\{g_{ij}\frac{dx^j}{d\psi}\right\} = \frac{1}{2}\left(\partial_i g_{k\ell}\right)\frac{dx^k}{d\psi}\,\frac{dx^\ell}{d\psi} \ .$$

For this problem the metric has only two nonzero components:

$$g_{\theta\theta} = a^2 \ , \qquad g_{\phi\phi} = a^2\sin^2\theta \ .$$

Taking $i = \theta$ in the geodesic equation,

$$\frac{d}{d\psi}\left\{g_{\theta\theta}\frac{d\theta}{d\psi}\right\} = \frac{1}{2}\partial_\theta g_{\phi\phi}\frac{d\phi}{d\psi}\frac{d\phi}{d\psi} \quad \Longrightarrow$$

$$\boxed{\frac{d^2\theta}{d\psi^2} = \sin\theta\cos\theta\left(\frac{d\phi}{d\psi}\right)^2 .}$$

Taking $i = \phi$,

$$\frac{d}{d\psi}\left\{a^2\sin^2\theta\frac{d\phi}{d\psi}\right\} = 0 \quad \Longrightarrow$$

$$\boxed{\frac{d}{d\psi}\left\{\sin^2\theta\frac{d\phi}{d\psi}\right\} = 0 .}$$

(c) This part is mainly algebra. Taking the derivative of

$$\cos\theta = \sin\psi\sin\alpha$$

implies

$$-\sin\theta\, d\theta = \cos\psi\sin\alpha\, d\psi .$$

Then, using the trigonometric identity $\sin\theta = \sqrt{1-\cos^2\theta}$, one finds

$$\sin\theta = \sqrt{1-\sin^2\psi\sin^2\alpha} ,$$

so

$$\frac{d\theta}{d\psi} = -\frac{\cos\psi\sin\alpha}{\sqrt{1-\sin^2\psi\sin^2\alpha}} .$$

Similarly

$$\tan\phi = \tan\psi\cos\alpha \quad \Longrightarrow \quad \sec^2\phi\, d\phi = \sec^2\psi\, d\psi\cos\alpha .$$

Then

$$\begin{aligned}\sec^2\phi &= \tan^2\phi + 1 = \tan^2\psi\cos^2\alpha + 1 \\ &= \frac{1}{\cos^2\psi}[\sin^2\psi\cos^2\alpha + \cos^2\psi] \\ &= \sec^2\psi[\sin^2\psi(1-\sin^2\alpha) + \cos^2\psi] \\ &= \sec^2\psi[1-\sin^2\psi\sin^2\alpha] ,\end{aligned}$$

So

$$\frac{d\phi}{d\psi} = \frac{\cos\alpha}{1 - \sin^2\psi\sin^2\alpha} \ .$$

To verify the geodesic equations of part (b), it is easiest to check the second one first:

$$\begin{aligned}\sin^2\theta\frac{d\phi}{d\psi} &= (1 - \sin^2\psi\sin^2\alpha)\frac{\cos\alpha}{1 - \sin^2\psi\sin^2\alpha} \\ &= \cos\alpha \ ,\end{aligned}$$

so clearly

$$\frac{d}{d\psi}\left\{\sin^2\theta\frac{d\phi}{d\psi}\right\} = \frac{d}{d\psi}(\cos\alpha) = 0 \ .$$

To verify the first geodesic equation from part (b), first calculate the left-hand side, $d^2\theta/d\psi^2$, using our result for $d\theta/d\psi$:

$$\frac{d^2\theta}{d\psi^2} = \frac{d}{d\psi}\left(\frac{d\theta}{d\psi}\right) = \frac{d}{d\psi}\left\{-\frac{\cos\psi\sin\alpha}{\sqrt{1 - \sin^2\psi\sin^2\alpha}}\right\} \ .$$

After some straightforward algebra, one finds

$$\frac{d^2\theta}{d\psi^2} = \frac{\sin\psi\sin\alpha\cos^2\alpha}{\left[1 - \sin^2\psi\sin^2\alpha\right]^{3/2}} \ .$$

The right-hand side of the first geodesic equation can be evaluated using the expression found above for $d\phi/d\psi$, giving

$$\begin{aligned}\sin\theta\cos\theta\left(\frac{d\phi}{d\psi}\right)^2 &= \sqrt{1 - \sin^2\psi\sin^2\alpha}\,\sin\psi\sin\alpha\,\frac{\cos^2\alpha}{\left[1 - \sin^2\psi\sin^2\alpha\right]^2} \\ &= \frac{\sin\psi\sin\alpha\cos^2\alpha}{\left[1 - \sin^2\psi\sin^2\alpha\right]^{3/2}} \ .\end{aligned}$$

So the left- and right-hand sides are equal.

PROBLEM 13: GEODESICS IN A CLOSED UNIVERSE

(a) *(7 points)* For purely radial motion, $d\theta = d\phi = 0$, so the line element reduces do

$$-c^2\,d\tau^2 = -c^2\,dt^2 + a^2(t)\left\{\frac{dr^2}{1 - r^2}\right\} \ .$$

Dividing by dt^2,

$$-c^2\left(\frac{d\tau}{dt}\right)^2 = -c^2 + \frac{a^2(t)}{1-r^2}\left(\frac{dr}{dt}\right)^2 .$$

Rearranging,

$$\boxed{\frac{d\tau}{dt} = \sqrt{1 - \frac{a^2(t)}{c^2(1-r^2)}\left(\frac{dr}{dt}\right)^2} .}$$

(b) *(3 points)*

$$\frac{dt}{d\tau} = \frac{1}{\frac{d\tau}{dt}} = \boxed{\frac{1}{\sqrt{1 - \frac{a^2(t)}{c^2(1-r^2)}\left(\frac{dr}{dt}\right)^2}} .}$$

(c) *(10 points)* During any interval of clock time dt, the proper time that would be measured by a clock moving with the object is given by $d\tau$, as given by the metric. Using the answer from part (a),

$$d\tau = \frac{d\tau}{dt}\,dt = \sqrt{1 - \frac{a^2(t)}{c^2(1-r_p^2)}\left(\frac{dr_p}{dt}\right)^2}\,dt .$$

Integrating to find the total proper time,

$$\boxed{\tau = \int_{t_1}^{t_2} \sqrt{1 - \frac{a^2(t)}{c^2(1-r_p^2)}\left(\frac{dr_p}{dt}\right)^2}\,dt .}$$

(d) *(10 points)* The physical distance $d\ell$ that the object moves during a given time interval is related to the coordinate distance dr by the spatial part of the metric:

$$d\ell^2 = ds^2 = a^2(t)\left\{\frac{dr^2}{1-r^2}\right\} \quad \Longrightarrow \quad d\ell = \frac{a(t)}{\sqrt{1-r^2}}\,dr .$$

Thus

$$\boxed{v_{\text{phys}} = \frac{d\ell}{dt} = \frac{a(t)}{\sqrt{1-r^2}}\,\frac{dr}{dt} .}$$

Discussion: A common mistake was to include $-c^2\,dt^2$ in the expression for $d\ell^2$. To understand why this is not correct, we should think about how an observer would measure $d\ell$, the distance to be used in calculating the velocity of a passing object. The observer would place a meter stick along the path of the object, and she would mark off the position of the object at the beginning and end of a time interval $dt_{\rm meas}$. Then she would read the distance by subtracting the two readings on the meter stick. This subtraction is equal to the physical distance between the two marks, measured at the ***same*** time t. Thus, when we compute the distance between the two marks, we set $dt = 0$. To compute the speed she would then divide the distance by $dt_{\rm meas}$, which is nonzero.

(e) *(10 points)* We start with the standard formula for a geodesic, as written on the front of the exam:

$$\frac{d}{d\tau}\left\{g_{\mu\nu}\frac{dx^\nu}{d\tau}\right\} = \frac{1}{2}\left(\partial_\mu g_{\lambda\sigma}\right)\frac{dx^\lambda}{d\tau}\frac{dx^\sigma}{d\tau}\ .$$

This formula is true for each possible value of μ, while the Einstein summation convention implies that the indices ν, λ, and σ are summed. We are trying to derive the equation for r, so we set $\mu = r$. Since the metric is diagonal, the only contribution on the left-hand side will be $\nu = r$. On the right-hand side, the diagonal nature of the metric implies that nonzero contributions arise only when $\lambda = \sigma$. The term will vanish unless $dx^\lambda/d\tau$ is nonzero, so λ must be either r or t (i.e., there is no motion in the θ or ϕ directions). However, the right-hand side is proportional to

$$\frac{\partial g_{\lambda\sigma}}{\partial r}\ .$$

Since $g_{tt} = -c^2$, the derivative with respect to r will vanish. Thus, the only nonzero contribution on the right-hand side arises from $\lambda = \sigma = r$. Using

$$g_{rr} = \frac{a^2(t)}{1-r^2}\ ,$$

the geodesic equation becomes

$$\frac{d}{d\tau}\left\{g_{rr}\frac{dr}{d\tau}\right\} = \frac{1}{2}\left(\partial_r g_{rr}\right)\frac{dr}{d\tau}\frac{dr}{d\tau}\ ,$$

or

$$\frac{d}{d\tau}\left\{\frac{a^2}{1-r^2}\frac{dr}{d\tau}\right\} = \frac{1}{2}\left[\partial_r\left(\frac{a^2}{1-r^2}\right)\right]\frac{dr}{d\tau}\frac{dr}{d\tau}\ ,$$

or finally

$$\boxed{\frac{d}{d\tau}\left\{\frac{a^2}{1-r^2}\frac{dr}{d\tau}\right\} = a^2\frac{r}{(1-r^2)^2}\left(\frac{dr}{d\tau}\right)^2 .}$$

This matches the form shown in the question, with

$$A = \frac{a^2}{1-r^2} \ , \text{ and } C = a^2\frac{r}{(1-r^2)^2} \ ,$$

with $B = D = E = 0$.

(f) *(5 points EXTRA CREDIT)* The algebra here can get messy, but it is not too bad if one does the calculation in an efficient way. One good way to start is to simplify the expression for p. Using the answer from (d),

$$p = \frac{mv_{\text{phys}}}{\sqrt{1-\frac{v_{\text{phys}}^2}{c^2}}} = \frac{m\frac{a(t)}{\sqrt{1-r^2}}\frac{dr}{dt}}{\sqrt{1-\frac{a^2}{c^2(1-r^2)}\left(\frac{dr}{dt}\right)^2}} .$$

Using the answer from (b), this simplifies to

$$p = m\frac{a(t)}{\sqrt{1-r^2}}\frac{dr}{dt}\frac{dt}{d\tau} = m\frac{a(t)}{\sqrt{1-r^2}}\frac{dr}{d\tau} .$$

Multiply the geodesic equation by m, and then use the above result to rewrite it as

$$\frac{d}{d\tau}\left\{\frac{ap}{\sqrt{1-r^2}}\right\} = ma^2\frac{r}{(1-r^2)^2}\left(\frac{dr}{d\tau}\right)^2 .$$

Expanding the left-hand side,

$$\begin{aligned} LHS = \frac{d}{d\tau}\left\{\frac{ap}{\sqrt{1-r^2}}\right\} &= \frac{1}{\sqrt{1-r^2}}\frac{d}{d\tau}\{ap\} + ap\frac{r}{(1-r^2)^{3/2}}\frac{dr}{d\tau} \\ &= \frac{1}{\sqrt{1-r^2}}\frac{d}{d\tau}\{ap\} + ma^2\frac{r}{(1-r^2)^2}\left(\frac{dr}{d\tau}\right)^2 . \end{aligned}$$

Inserting this expression back into left-hand side of the original equation, one sees that the second term cancels the expression on the right-hand side, leaving

$$\frac{1}{\sqrt{1-r^2}}\frac{d}{d\tau}\{ap\} = 0 .$$

Multiplying by $\sqrt{1-r^2}$, one has the desired result:

$$\frac{d}{d\tau}\{ap\} = 0 \quad \Longrightarrow \quad \boxed{p \propto \frac{1}{a(t)} .}$$

PROBLEM 14: A TWO-DIMENSIONAL CURVED SPACE *(40 points)*

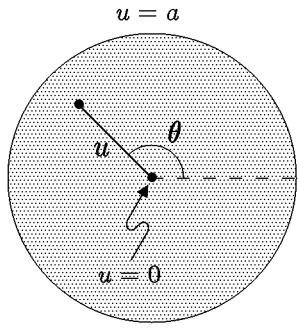

(a) For $\theta = constant$, the expression for the metric reduces to

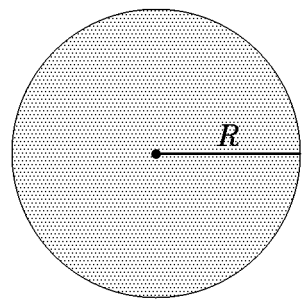

$$ds^2 = \frac{a\,\mathrm{d}u^2}{4u(a-u)} \quad \Longrightarrow$$

$$ds = \frac{1}{2}\sqrt{\frac{a}{u(a-u)}}\,\mathrm{d}u \ .$$

To find the length of the radial line shown, one must integrate this expression from the value of u at the center, which is 0, to the value of u at the outer edge, which is a. So

$$\boxed{R = \frac{1}{2}\int_0^a \sqrt{\frac{a}{u(a-u)}}\,\mathrm{d}u \ .}$$

You were not expected to do it, but the integral can be carried out, giving $R = (\pi/2)\sqrt{a}$.

(b) For $u = constant$, the expression for the metric reduces to

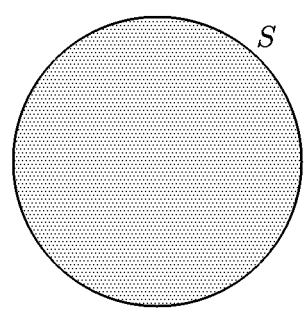

$$ds^2 = u\,\mathrm{d}\theta^2 \quad \Longrightarrow \quad ds = \sqrt{u}\,\mathrm{d}\theta \ .$$

Since θ runs from 0 to 2π, and $u = a$ for the circumference of the space,

$$\boxed{S = \int_0^{2\pi} \sqrt{a}\,\mathrm{d}\theta = 2\pi\sqrt{a} \ .}$$

(c) To evaluate the answer to first order in $\mathrm{d}u$ means to neglect any terms that would be proportional to $\mathrm{d}u^2$ or higher powers. This means that we can treat the annulus as if it were arbitrarily thin, in which case we can imagine bending it into a rectangle without changing its area. The area is then equal to the circumference times the width. Both the circumference and the width must be calculated by using the metric:

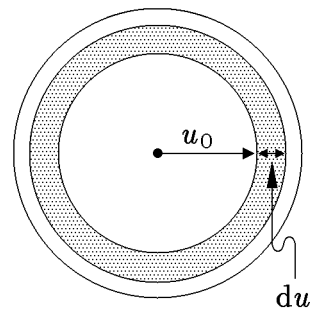

$$\begin{aligned}
\mathrm{d}A &= \text{circumference} \times \text{width} \\
&= [2\pi\sqrt{u_0}\,] \times \left[\frac{1}{2}\sqrt{\frac{a}{u_0(a-u_0)}}\,\mathrm{d}u\right] \\
&= \boxed{\pi\sqrt{\frac{a}{(a-u_0)}}\,\mathrm{d}u\ .}
\end{aligned}$$

(d) We can find the total area by imagining that it is broken up into annuluses, where a single annulus starts at radial coordinate u and extends to $u + \mathrm{d}u$. As in part (a), this expression must be integrated from the value of u at the center, which is 0, to the value of u at the outer edge, which is a.

$$\boxed{A = \pi\int_0^a \sqrt{\frac{a}{(a-u)}}\,\mathrm{d}u\ .}$$

You did not need to carry out this integration, but the answer would be $A = 2\pi a$.

(e) From the list at the front of the exam, the general formula for a geodesic is written as

$$\frac{\mathrm{d}}{\mathrm{d}s}\left[g_{ij}\,\frac{\mathrm{d}x^j}{\mathrm{d}s}\right] = \frac{1}{2}\frac{\partial g_{k\ell}}{\partial x^i}\frac{\mathrm{d}x^k}{\mathrm{d}s}\frac{\mathrm{d}x^\ell}{\mathrm{d}s}\ .$$

The metric components g_{ij} are related to $\mathrm{d}s^2$ by

$$\mathrm{d}s^2 = g_{ij}\,\mathrm{d}x^i\,\mathrm{d}x^j\ ,$$

where the Einstein summation convention (sum over repeated indices) is assumed. In this case

$$g_{11} \equiv g_{uu} = \frac{a}{4u(a-u)}$$

$$g_{22} \equiv g_{\theta\theta} = u$$

$$g_{12} = g_{21} = 0 \ ,$$

where I have chosen $x^1 = u$ and $x^2 = \theta$. The equation with $\mathrm{d}u/\mathrm{d}s$ on the left-hand side is found by looking at the geodesic equations for $i = 1$. Of course j, k, and ℓ must all be summed, but the only nonzero contributions arise when $j = 1$, and k and ℓ are either both equal to 1 or both equal to 2:

$$\frac{\mathrm{d}}{\mathrm{d}s}\left[g_{uu}\frac{\mathrm{d}u}{\mathrm{d}s}\right] = \frac{1}{2}\frac{\partial g_{uu}}{\partial u}\left(\frac{\mathrm{d}u}{\mathrm{d}s}\right)^2 + \frac{1}{2}\frac{\partial g_{\theta\theta}}{\partial u}\left(\frac{\mathrm{d}\theta}{\mathrm{d}s}\right)^2 \ .$$

$$\begin{aligned}
\frac{\mathrm{d}}{\mathrm{d}s}\left[\frac{a}{4u(a-u)}\frac{\mathrm{d}u}{\mathrm{d}s}\right] &= \frac{1}{2}\left[\frac{\mathrm{d}}{\mathrm{d}u}\left(\frac{a}{4u(a-u)}\right)\right]\left(\frac{\mathrm{d}u}{\mathrm{d}s}\right)^2 + \frac{1}{2}\left[\frac{\mathrm{d}}{\mathrm{d}u}(u)\right]\left(\frac{\mathrm{d}\theta}{\mathrm{d}s}\right)^2 \\
&= \frac{1}{2}\left[\frac{a}{4u(a-u)^2} - \frac{a}{4u^2(a-u)}\right]\left(\frac{\mathrm{d}u}{\mathrm{d}s}\right)^2 + \frac{1}{2}\left(\frac{\mathrm{d}\theta}{\mathrm{d}s}\right)^2 \\
&= \boxed{\frac{1}{8}\frac{a(2u-a)}{u^2(a-u)^2}\left(\frac{\mathrm{d}u}{\mathrm{d}s}\right)^2 + \frac{1}{2}\left(\frac{\mathrm{d}\theta}{\mathrm{d}s}\right)^2 \ .}
\end{aligned}$$

(f) This part is solved by the same method, but it is simpler. Here we consider the geodesic equation with $i = 2$. The only term that contributes on the left-hand side is $j = 2$. On the right-hand side one finds nontrivial expressions when k and ℓ are either both equal to 1 or both equal to 2. However, the terms on the right-hand side both involve the derivative of the metric with respect to $x^2 = \theta$, and these derivatives all vanish. So

$$\frac{\mathrm{d}}{\mathrm{d}s}\left[g_{\theta\theta}\frac{\mathrm{d}\theta}{\mathrm{d}s}\right] = \frac{1}{2}\frac{\partial g_{uu}}{\partial \theta}\left(\frac{\mathrm{d}u}{\mathrm{d}s}\right)^2 + \frac{1}{2}\frac{\partial g_{\theta\theta}}{\partial \theta}\left(\frac{\mathrm{d}\theta}{\mathrm{d}s}\right)^2 \ ,$$

which reduces to

$$\boxed{\frac{\mathrm{d}}{\mathrm{d}s}\left[u\frac{\mathrm{d}\theta}{\mathrm{d}s}\right] = 0 \ .}$$

PROBLEM 15: ROTATING FRAMES OF REFERENCE *(35 points)*

(a) The metric was given as

$$-c^2\,\mathrm{d}\boldsymbol{\tau}^2 = -c^2\,\mathrm{d}t^2 + \left[\mathrm{d}r^2 + r^2\,(\mathrm{d}\phi + \omega\,\mathrm{d}t)^2 + \mathrm{d}z^2\right] ,$$

and the metric coefficients are then just read off from this expression:

$$g_{11} \equiv g_{rr} = 1$$

$$g_{00} \equiv g_{tt} = \text{coefficient of } \mathrm{d}t^2 = -c^2 + r^2\omega^2$$

$$g_{20} \equiv g_{02} \equiv g_{\phi t} \equiv g_{t\phi} = \frac{1}{2} \times \text{coefficient of } \mathrm{d}\phi\,\mathrm{d}t = r^2\omega^2$$

$$g_{22} \equiv g_{\phi\phi} = \text{coefficient of } \mathrm{d}\phi^2 = r^2$$

$$g_{33} \equiv g_{zz} = \text{coefficient of } \mathrm{d}z^2 = 1 .$$

Note that the off-diagonal term $g_{\phi t}$ must be multiplied by $1/2$, because the expression

$$\sum_{\mu=0}^{3}\sum_{\nu=0}^{3} g_{\mu\nu}\,dx^\mu\,dx^\nu$$

includes the two equal terms $g_{20}\,\mathrm{d}\phi\,\mathrm{d}t + g_{02}\,\mathrm{d}t\,\mathrm{d}\phi$, where $g_{20} \equiv g_{02}$.

(b) Starting with the general expression

$$\frac{\mathrm{d}}{\mathrm{d}\boldsymbol{\tau}}\left\{g_{\mu\nu}\frac{\mathrm{d}x^\nu}{\mathrm{d}\boldsymbol{\tau}}\right\} = \frac{1}{2}\left(\partial_\mu g_{\lambda\sigma}\right)\frac{\mathrm{d}x^\lambda}{\mathrm{d}\boldsymbol{\tau}}\frac{\mathrm{d}x^\sigma}{\mathrm{d}\boldsymbol{\tau}} ,$$

we set $\mu = r$:

$$\frac{\mathrm{d}}{\mathrm{d}\boldsymbol{\tau}}\left\{g_{r\nu}\frac{\mathrm{d}x^\nu}{\mathrm{d}\boldsymbol{\tau}}\right\} = \frac{1}{2}\left(\partial_r g_{\lambda\sigma}\right)\frac{\mathrm{d}x^\lambda}{\mathrm{d}\boldsymbol{\tau}}\frac{\mathrm{d}x^\sigma}{\mathrm{d}\boldsymbol{\tau}} .$$

When we sum over ν on the left-hand side, the only value for which $g_{r\nu} \neq 0$ is $\nu = 1 \equiv r$. Thus, the left-hand side is simply

$$\text{LHS} = \frac{\mathrm{d}}{\mathrm{d}\boldsymbol{\tau}}\left(g_{rr}\frac{\mathrm{d}x^1}{\mathrm{d}\boldsymbol{\tau}}\right) = \frac{\mathrm{d}}{\mathrm{d}\boldsymbol{\tau}}\left(\frac{\mathrm{d}r}{\mathrm{d}\boldsymbol{\tau}}\right) = \frac{\mathrm{d}^2 r}{\mathrm{d}\boldsymbol{\tau}^2} .$$

The RHS includes every combination of λ and σ for which $g_{\lambda\sigma}$ depends on r, so that $\partial_r\, g_{\lambda\sigma} \neq 0$. This means g_{tt}, $g_{\phi\phi}$, and $g_{\phi t}$. So,

$$\begin{aligned} RHS &= \frac{1}{2}\partial_r(-c^2 + r^2\omega^2)\left(\frac{\mathrm{d}t}{\mathrm{d}\boldsymbol{\tau}}\right)^2 + \frac{1}{2}\partial_r(r^2)\left(\frac{\mathrm{d}\phi}{\mathrm{d}\boldsymbol{\tau}}\right)^2 + \partial_r(r^2\omega)\,\frac{\mathrm{d}\phi}{\mathrm{d}\boldsymbol{\tau}}\,\frac{\mathrm{d}t}{\mathrm{d}\boldsymbol{\tau}} \\ &= r\omega^2\left(\frac{\mathrm{d}t}{\mathrm{d}\boldsymbol{\tau}}\right)^2 + r\left(\frac{\mathrm{d}\phi}{\mathrm{d}\boldsymbol{\tau}}\right)^2 + 2r\omega\,\frac{\mathrm{d}\phi}{\mathrm{d}\boldsymbol{\tau}}\,\frac{\mathrm{d}t}{\mathrm{d}\boldsymbol{\tau}} \\ &= r\left(\frac{\mathrm{d}\phi}{\mathrm{d}\boldsymbol{\tau}} + \omega\,\frac{\mathrm{d}t}{\mathrm{d}\boldsymbol{\tau}}\right)^2 . \end{aligned}$$

Note that the final term in the first line is really the sum of the contributions from $g_{\phi t}$ and $g_{t\phi}$, where the two terms were combined to cancel the factor of $1/2$ in the general expression. Finally,

$$\boxed{\frac{\mathrm{d}^2 r}{\mathrm{d}\tau^2} = r\left(\frac{\mathrm{d}\phi}{\mathrm{d}\tau} + \omega\,\frac{\mathrm{d}t}{\mathrm{d}\tau}\right)^2 .}$$

If one expands the RHS as

$$\frac{\mathrm{d}^2 r}{\mathrm{d}\tau^2} = r\left(\frac{\mathrm{d}\phi}{\mathrm{d}\tau}\right)^2 + r\omega^2\left(\frac{\mathrm{d}t}{\mathrm{d}\tau}\right)^2 + 2r\omega\,\frac{\mathrm{d}\phi}{\mathrm{d}\tau}\frac{\mathrm{d}t}{\mathrm{d}\tau} ,$$

then one can identify the term proportional to ω^2 as the centrifugal force, and the term proportional to ω as the Coriolis force.

(c) Substituting $\mu = \phi$,

$$\frac{\mathrm{d}}{\mathrm{d}\tau}\left\{g_{\phi\nu}\frac{\mathrm{d}x^\nu}{\mathrm{d}\tau}\right\} = \frac{1}{2}\left(\partial_\phi g_{\lambda\sigma}\right)\frac{\mathrm{d}x^\lambda}{\mathrm{d}\tau}\frac{\mathrm{d}x^\sigma}{\mathrm{d}\tau} .$$

But none of the metric coefficients depend on ϕ, so the right-hand side is zero. The left-hand side receives contributions from $\nu = \phi$ and $\nu = t$:

$$\frac{\mathrm{d}}{\mathrm{d}\tau}\left(g_{\phi\phi}\,\frac{\mathrm{d}\phi}{\mathrm{d}\tau} + g_{\phi t}\,\frac{\mathrm{d}t}{\mathrm{d}\tau}\right) = \frac{\mathrm{d}}{\mathrm{d}\tau}\left(r^2\,\frac{\mathrm{d}\phi}{\mathrm{d}\tau} + r^2\omega\,\frac{\mathrm{d}t}{\mathrm{d}\tau}\right) = 0 ,$$

so

$$\boxed{\frac{\mathrm{d}}{\mathrm{d}\tau}\left(r^2\,\frac{\mathrm{d}\phi}{\mathrm{d}\tau} + r^2\omega\,\frac{\mathrm{d}t}{\mathrm{d}\tau}\right) = 0 .}$$

Note that one cannot "factor out" r^2, since r can depend on τ. If this equation is expanded to give an equation for $\mathrm{d}^2\phi/\mathrm{d}\tau^2$, the term proportional to ω would be identified as the Coriolis force. There is no term proportional to ω^2, since the centrifugal force has no component in the ϕ direction.

(d) If Eq. (P15.1) of the problem is divided by $c^2\mathrm{d}t^2$, one obtains

$$\left(\frac{\mathrm{d}\tau}{\mathrm{d}t}\right)^2 = 1 - \frac{1}{c^2}\left[\left(\frac{\mathrm{d}r}{\mathrm{d}t}\right)^2 + r^2\left(\frac{\mathrm{d}\phi}{\mathrm{d}t} + \omega\right)^2 + \left(\frac{\mathrm{d}z}{\mathrm{d}t}\right)^2\right] .$$

Then using

$$\frac{\mathrm{d}t}{\mathrm{d}\tau} = \frac{1}{\left(\frac{\mathrm{d}\tau}{\mathrm{d}t}\right)} ,$$

one has

$$\boxed{\frac{\mathrm{d}t}{\mathrm{d}\boldsymbol{\tau}} = \frac{1}{\sqrt{1 - \frac{1}{c^2}\left[\left(\frac{\mathrm{d}r}{\mathrm{d}t}\right)^2 + r^2\left(\frac{\mathrm{d}\phi}{\mathrm{d}t} + \omega\right)^2 + \left(\frac{\mathrm{d}z}{\mathrm{d}t}\right)^2\right]}} \ .}$$

Note that this equation is really just

$$\frac{\mathrm{d}t}{\mathrm{d}\boldsymbol{\tau}} = \frac{1}{\sqrt{1 - v^2/c^2}} \ ,$$

adapted to the rotating cylindrical coordinate system.

PROBLEM 16: CIRCULAR ORBITS IN A SCHWARSZCHILD METRIC

(a) Along a perfectly circular orbit in the x-y plane, the expression for $d\boldsymbol{\tau}^2$ simplifies greatly. Note that

$$\begin{aligned} r = \text{fixed} \quad &\Longrightarrow \quad dr = 0 \ ; \\ \theta = \pi/2 \quad &\Longrightarrow \quad d\theta = 0, \quad \sin\theta = 1 \ ; \\ \phi = \omega t \quad &\Longrightarrow \quad d\phi = \omega dt \ . \end{aligned}$$

The expression for $d\boldsymbol{\tau}^2$ then reduces to

$$\begin{aligned} ds^2 = -c^2 d\boldsymbol{\tau}^2 &= -\left(1 - \frac{2GM}{rc^2}\right) c^2 dt^2 + r^2\omega^2 dt^2 \\ &= -\left(1 - \frac{2GM}{rc^2} - \frac{r^2\omega^2}{c^2}\right) c^2 dt^2 \ . \end{aligned}$$

Therefore we find

$$\boxed{\frac{d\boldsymbol{\tau}}{dt} = \sqrt{1 - \frac{2GM}{rc^2} - \frac{r^2\omega^2}{c^2}}} \tag{S16.1}$$

as hoped.

(b) The geodesic equation (5.65) was written in the notes as

$$\boxed{\frac{d}{d\boldsymbol{\tau}}\left[g_{\mu\nu}\frac{dx^\nu}{d\boldsymbol{\tau}}\right] = \frac{1}{2}\frac{\partial g_{\lambda\sigma}}{\partial x^\mu}\frac{dx^\lambda}{d\boldsymbol{\tau}}\frac{dx^\sigma}{d\boldsymbol{\tau}} \ ,} \tag{5.65}$$

We will define $g_{\mu\nu}$ by

$$ds^2 = -c^2\, d\boldsymbol{\tau}^2 = g_{\mu\nu}\, dx^\mu\, dx^\nu \ ,$$

but you should be aware that there are different conventions in use. Some textbooks would use $d\boldsymbol{\tau}^2 = g_{\mu\nu}\, dx^\mu\, dx^\nu$, or $c^2 d\boldsymbol{\tau}^2 = g_{\mu\nu}\, dx^\mu\, dx^\nu$. The geodesic equation above is valid for any of these definitions of $g_{\mu\nu}$, since one definition is related to another by multiplying $g_{\mu\nu}$ by a constant factor. The geodesic equation is not changed if $g_{\mu\nu}$ is replaced by $constant \times g_{\mu\nu}$, since the constant would multiply both sides of the equation and would cancel out.

The nonzero components of $g_{\mu\nu}$ for this case are

$$g_{tt} = -\left(1 - \frac{2GM}{rc^2}\right) c^2 \ , \qquad g_{rr} = \left(1 - \frac{2GM}{rc^2}\right)^{-1} \ ,$$

$$g_{\theta\theta} = r^2 \ , \qquad g_{\phi\phi} = r^2 \ ,$$

where $\sin\theta = 1$ was used to simplify $g_{\phi\phi}$. For $\mu = r$ the left-hand side of the geodesic equation becomes

$$\frac{d}{d\boldsymbol{\tau}}\left[g_{rr}\frac{dr}{d\boldsymbol{\tau}}\right] \ ,$$

which is equal to zero for this problem, since $dr = 0$. The right-hand side of the geodesic equation is expanded by explicitly summing over λ and σ, recognizing that for this metric the only nonzero terms arise when $\lambda = \sigma$. The geodesic equation then becomes

$$0 = \frac{1}{2}\frac{\partial g_{tt}}{\partial r}\left(\frac{dt}{d\boldsymbol{\tau}}\right)^2 + \frac{1}{2}\frac{\partial g_{rr}}{\partial r}\left(\frac{dr}{d\boldsymbol{\tau}}\right)^2 + \frac{1}{2}\frac{\partial g_{\theta\theta}}{\partial r}\left(\frac{d\theta}{d\boldsymbol{\tau}}\right)^2 + \frac{1}{2}\frac{\partial g_{\phi\phi}}{\partial r}\left(\frac{d\phi}{d\boldsymbol{\tau}}\right)^2 \ .$$

Since $d\theta = dr = 0$ this reduces to

$$\boxed{0 = \frac{1}{2}\frac{\partial g_{tt}}{\partial r}\left(\frac{dt}{d\boldsymbol{\tau}}\right)^2 + \frac{1}{2}\frac{\partial g_{\phi\phi}}{\partial r}\left(\frac{d\phi}{d\boldsymbol{\tau}}\right)^2 \ .}$$

(c) Take the derivatives

$$\frac{\partial}{\partial r} g_{tt} = -\frac{2GM}{r^2}$$

and

$$\frac{\partial}{\partial r} g_{\phi\phi} = 2r \ .$$

Substituting these into the result of part (b) gives

$$r\left(\frac{d\phi}{d\tau}\right)^2 = \frac{GM}{r^2}\left(\frac{dt}{d\tau}\right)^2 \quad .$$

Use the chain rule to write

$$\frac{d\phi}{d\tau} = \frac{d\phi}{dt}\frac{dt}{d\tau}$$

and divide both sides by $(dt/d\tau)^2$ to find

$$r\left(\frac{d\phi}{dt}\right)^2 = \frac{GM}{r^2} \quad .$$

Remember $d\phi/dt \equiv \omega$ so that

$$\boxed{r\omega^2 = \frac{GM}{r^2} \quad .}$$

(d) From part (a) of the solution we found that

$$\frac{d\tau}{dt} = \sqrt{1 - \frac{2GM}{rc^2} - \frac{r^2\omega^2}{c^2}} \, . \tag{S16.1}$$

The quantity inside the square root must be positive and this will give us a constraint on the possible circular orbits. Using our final result from part (c) we have

$$\frac{r^2\omega^2}{c^2} = \frac{GM}{rc^2} \, ,$$

so equation (S16.1) becomes

$$\frac{d\tau}{dt} = \sqrt{1 - \frac{3GM}{rc^2}} \, .$$

We must therefore require

$$1 - \frac{3GM}{rc^2} > 0 \quad \Longrightarrow \quad \boxed{r > \frac{3GM}{c^2} = \frac{3}{2}R_S \, ,}$$

where we recalled that the Schwarzchild radius is $R_S = 2GM/c^2$. The smallest possible circular orbit in the Schwarzchild geometry has radius $\frac{3}{2}R_S$. At this limiting radius $d\tau/dt = 0$, which indicates that the orbital velocity is equal to the speed of light. Closer orbits would require a speed greater than that of light, which is not possible. Further analysis of orbits in this geometry shows that the smallest *stable* circular orbit occurs for $r = 3R_S$. Circular orbits are possible for $\frac{3}{2}R_S < r < 3R_S$, but they are not stable. A small inward nudge would cause the orbiting object to plunge inward, while a small outward nudge will allow the object to fly outward to infinity.

PROBLEM 17: THE STABILITY OF SCHWARZSCHILD ORBITS*

(30 points)

From the metric:

$$ds^2 = -c^2 d\boldsymbol{\tau}^2 = -h(r)\, c^2 dt^2 + h(r)^{-1} dr^2 + r^2 d\theta^2 + r^2 \sin^2\theta d\phi^2 \,, \tag{S17.1}$$

and the convention $ds^2 = g_{\mu\nu} dx^\mu dx^\nu$ we read the nonvanishing metric components:

$$g_{tt} = -h(r)c^2 \,, \quad g_{rr} = \frac{1}{h(r)} \,, \quad g_{\theta\theta} = r^2 \,, \quad g_{\phi\phi} = r^2 \sin^2\theta \,. \tag{S17.2}$$

We are told that the orbit has $\theta = \pi/2$, so on the orbit $d\theta = 0$ and the relevant metric and metric components are:

$$ds^2 = -c^2 d\boldsymbol{\tau}^2 = -h(r)\, c^2 dt^2 + h(r)^{-1} dr^2 + r^2 d\phi^2 \,, \tag{S17.3}$$

$$g_{tt} = -h(r)c^2 \,, \quad g_{rr} = \frac{1}{h(r)} \,, \quad g_{\phi\phi} = r^2 \,. \tag{S17.4}$$

We also know that

$$h(r) = 1 - \frac{R_S}{r} \,. \tag{S17.5}$$

(a) The geodesic equation

$$\frac{d}{d\boldsymbol{\tau}} \left[g_{\mu\nu} \frac{dx^\nu}{d\boldsymbol{\tau}} \right] = \frac{1}{2} \frac{\partial g_{\lambda\sigma}}{\partial x^\mu} \frac{dx^\lambda}{d\boldsymbol{\tau}} \frac{dx^\sigma}{d\boldsymbol{\tau}} \,, \tag{S17.6}$$

for the index value $\mu = r$ takes the form

$$\frac{d}{d\boldsymbol{\tau}} \left[g_{rr} \frac{dr}{d\boldsymbol{\tau}} \right] = \frac{1}{2} \frac{\partial g_{\lambda\sigma}}{\partial r} \frac{dx^\lambda}{d\boldsymbol{\tau}} \frac{dx^\sigma}{d\boldsymbol{\tau}} \,.$$

Expanding out

$$\frac{d}{d\boldsymbol{\tau}} \left[\frac{1}{h} \frac{dr}{d\boldsymbol{\tau}} \right] = \frac{1}{2} \frac{\partial g_{tt}}{\partial r} \left(\frac{dt}{d\boldsymbol{\tau}} \right)^2 + \frac{1}{2} \frac{\partial g_{rr}}{\partial r} \left(\frac{dr}{d\boldsymbol{\tau}} \right)^2 + \frac{1}{2} \frac{\partial g_{\phi\phi}}{\partial r} \left(\frac{d\phi}{d\boldsymbol{\tau}} \right)^2 \,.$$

Using the values in (S17.4) to evaluate the right-hand side and taking the derivatives on the left-hand side:

$$\underline{-\frac{h'}{h^2} \left(\frac{dr}{d\boldsymbol{\tau}} \right)^2} + \frac{1}{h} \frac{d^2 r}{d\boldsymbol{\tau}^2} = -\frac{1}{2} c^2 h' \left(\frac{dt}{d\boldsymbol{\tau}} \right)^2 \underline{-\frac{1}{2} \frac{h'}{h^2} \left(\frac{dr}{d\boldsymbol{\tau}} \right)^2} + r \left(\frac{d\phi}{d\boldsymbol{\tau}} \right)^2 \,.$$

---

* Solution by Barton Zwiebach.