8.286 Lecture 3
September 14, 2022

THE DOPPLER EFFECT and SPECIAL RELATIVITY

Hubble's Original 1929 Graph

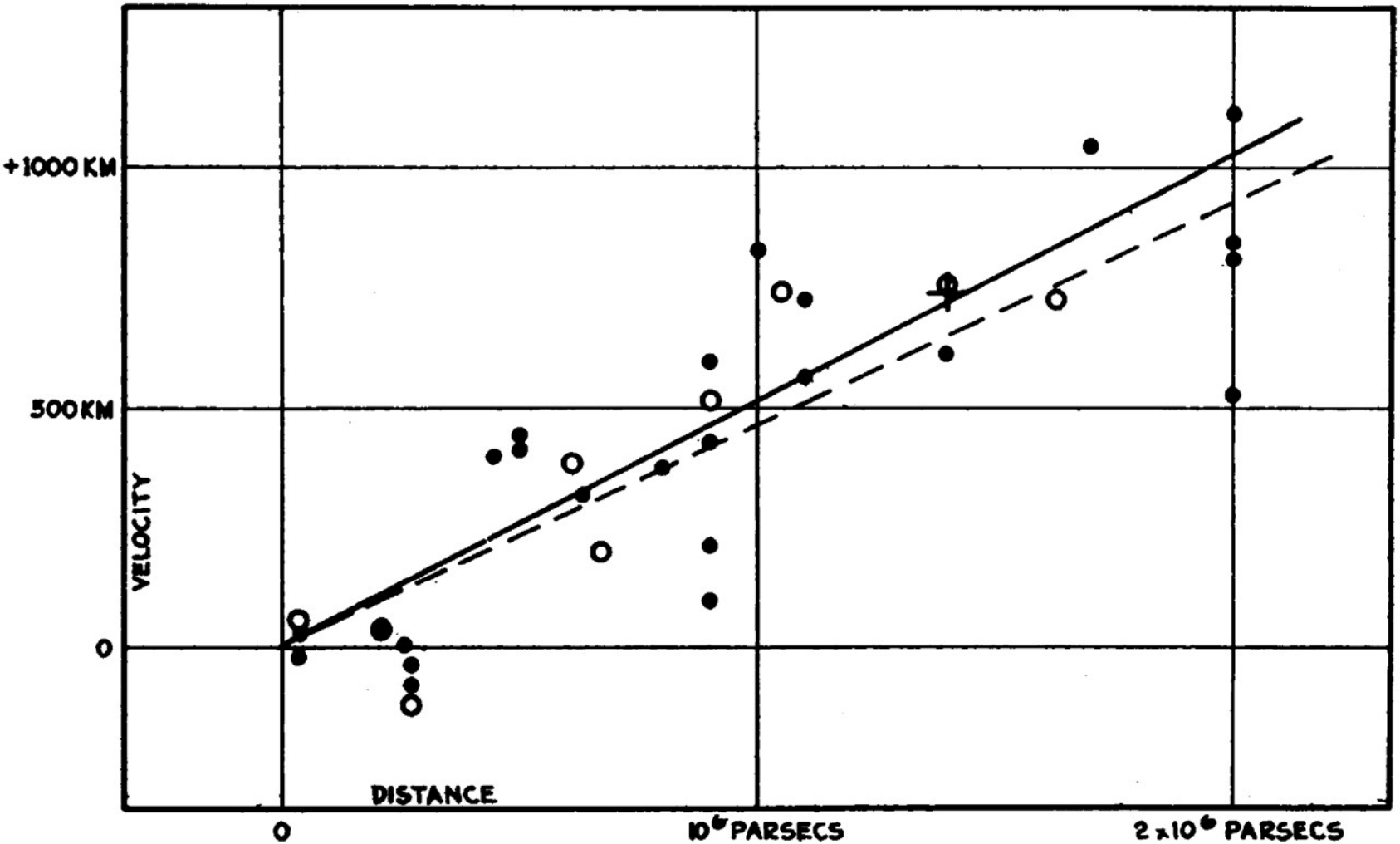

(1)

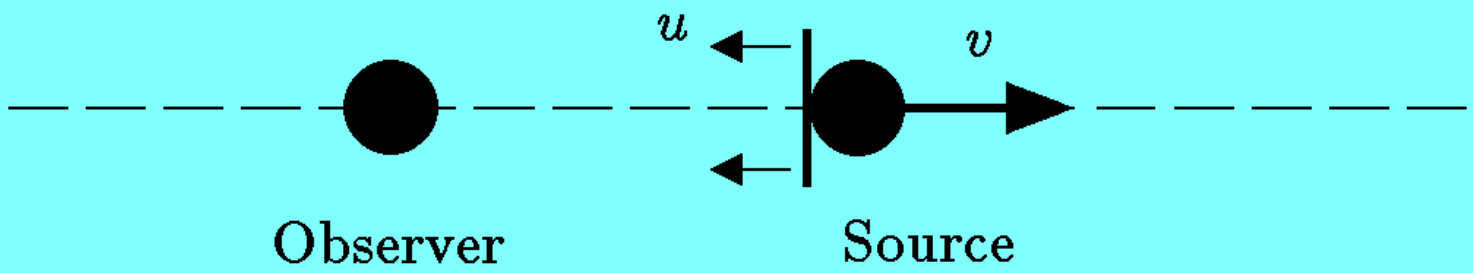

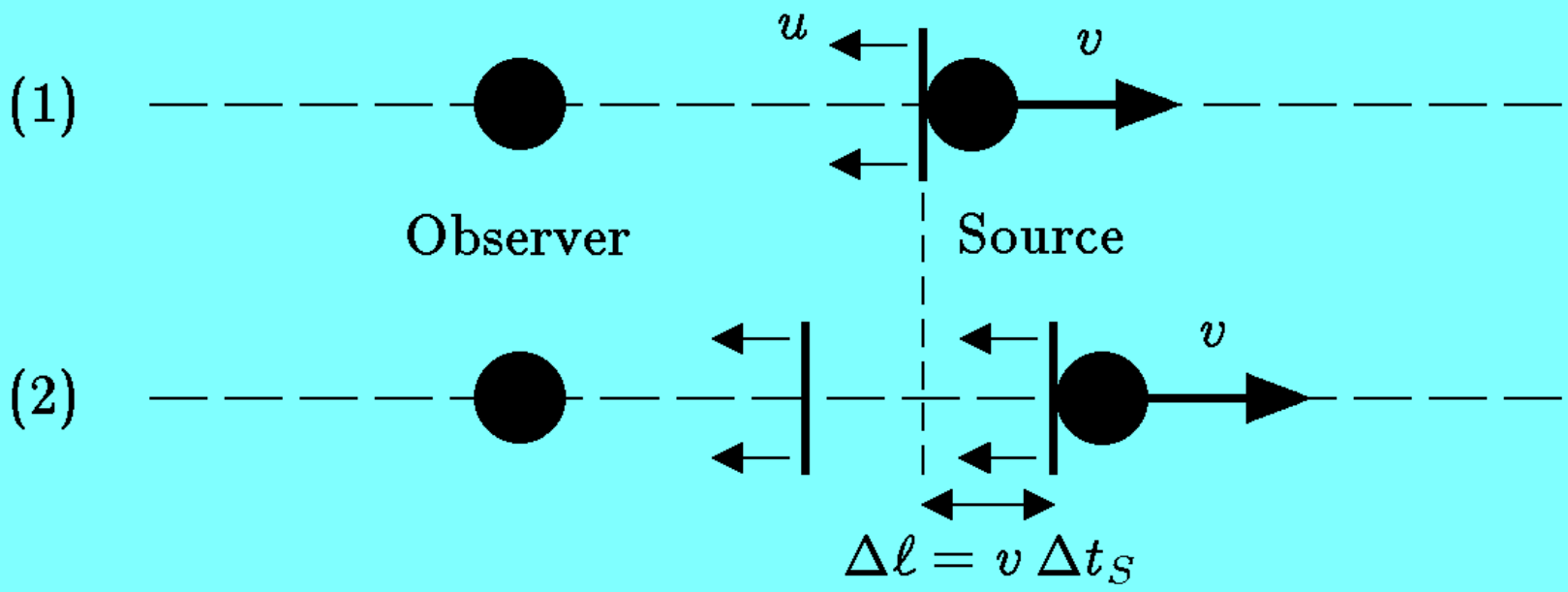
(1)
u
v
Observer
Source
(2)
v
$\Delta\ell = v\,\Delta t_S$

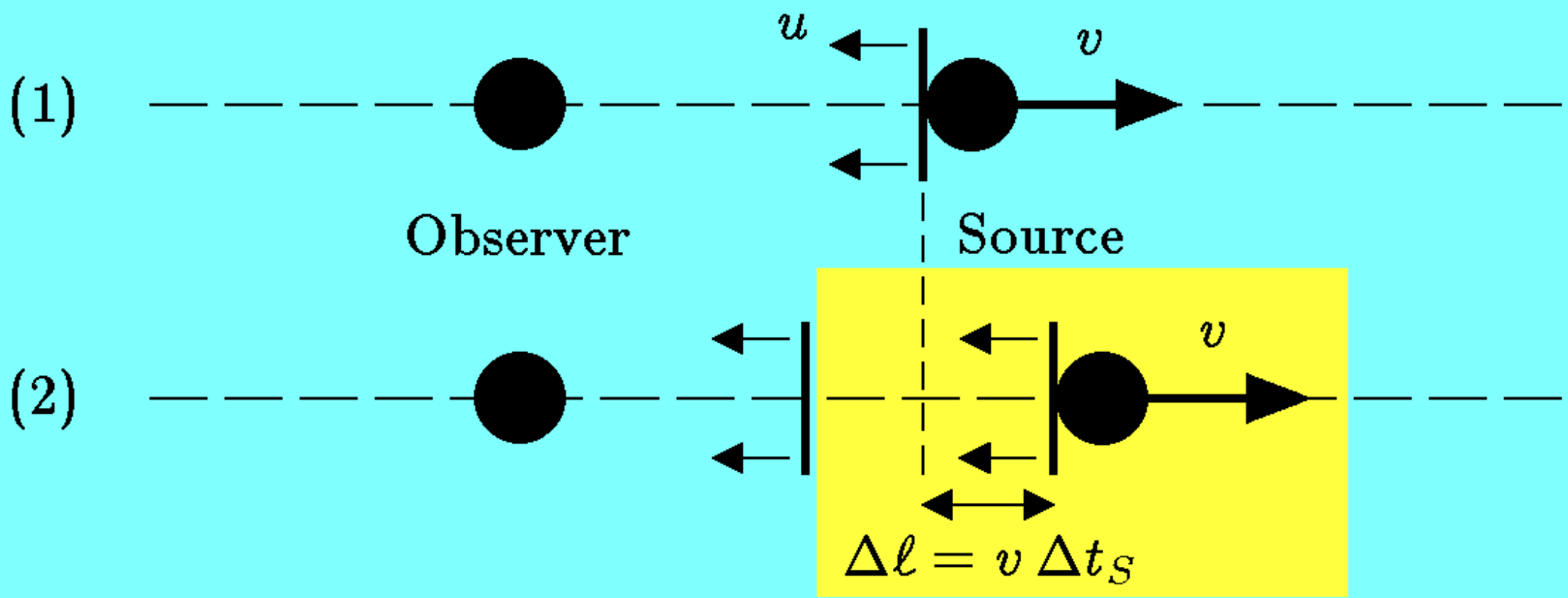
(1)
u
v
Observer
Source
(2)
v
$\Delta\ell = v\,\Delta t_S$

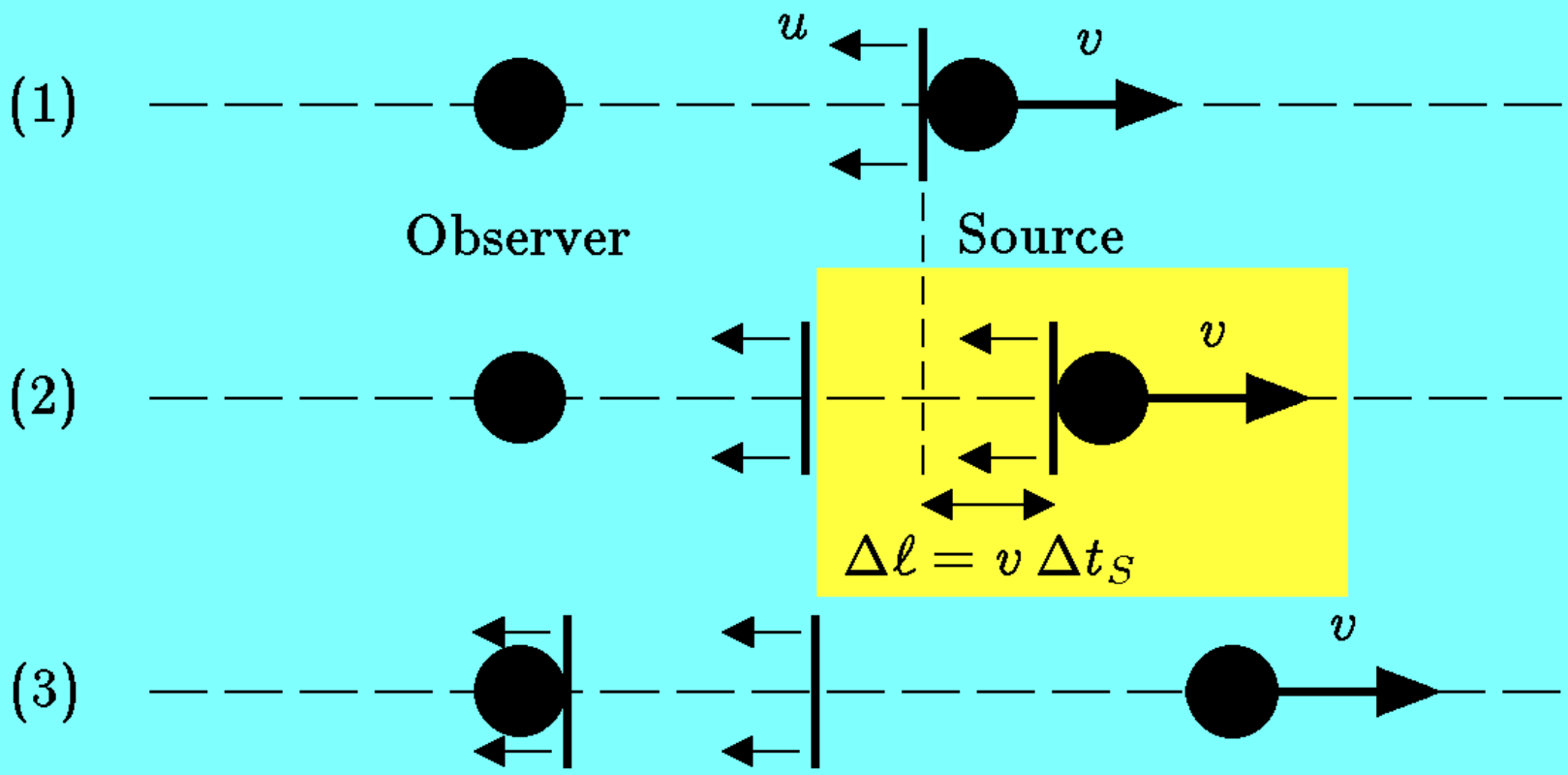
(1)
u
v
Observer
Source
(2)
v
$\Delta\ell = v\,\Delta t_S$
(3)
v

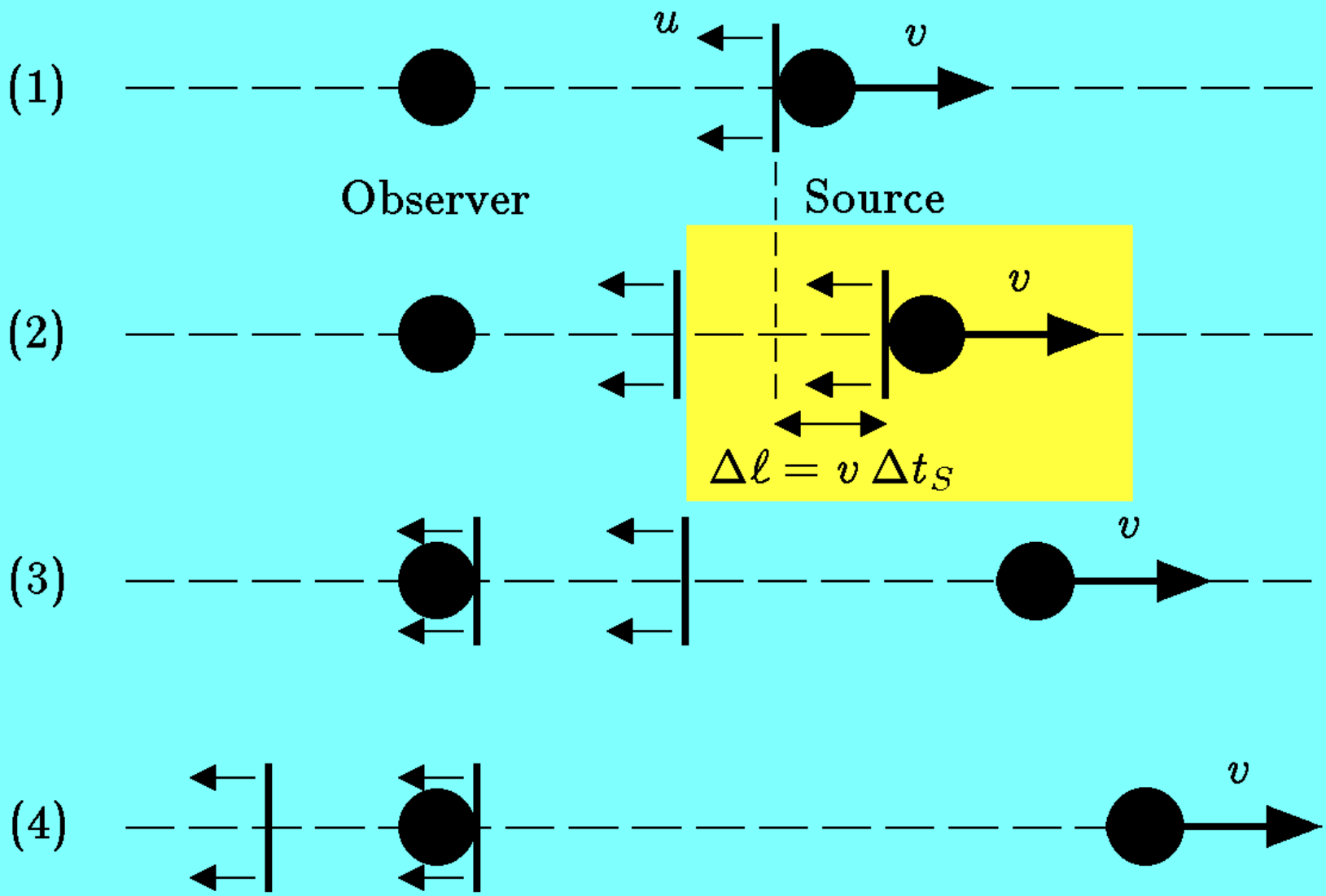
(1)
u
v
Observer
Source
(2)
v
$\Delta\ell = v\,\Delta t_S$
(3)
v
(4)
v

(1′)

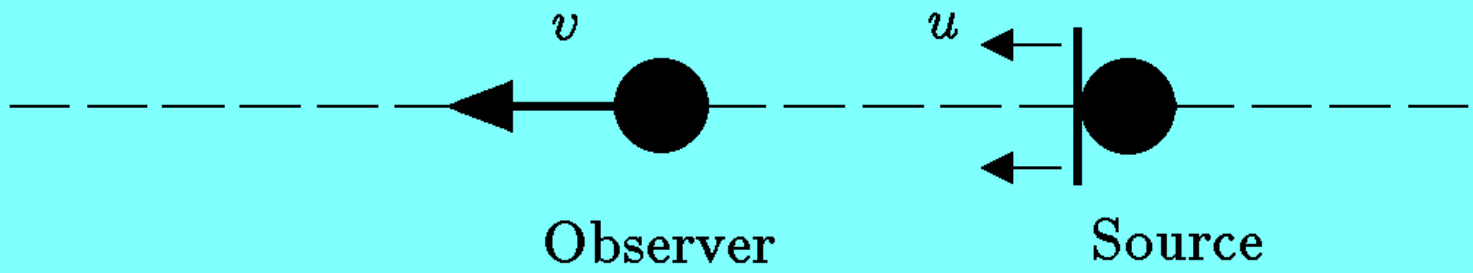

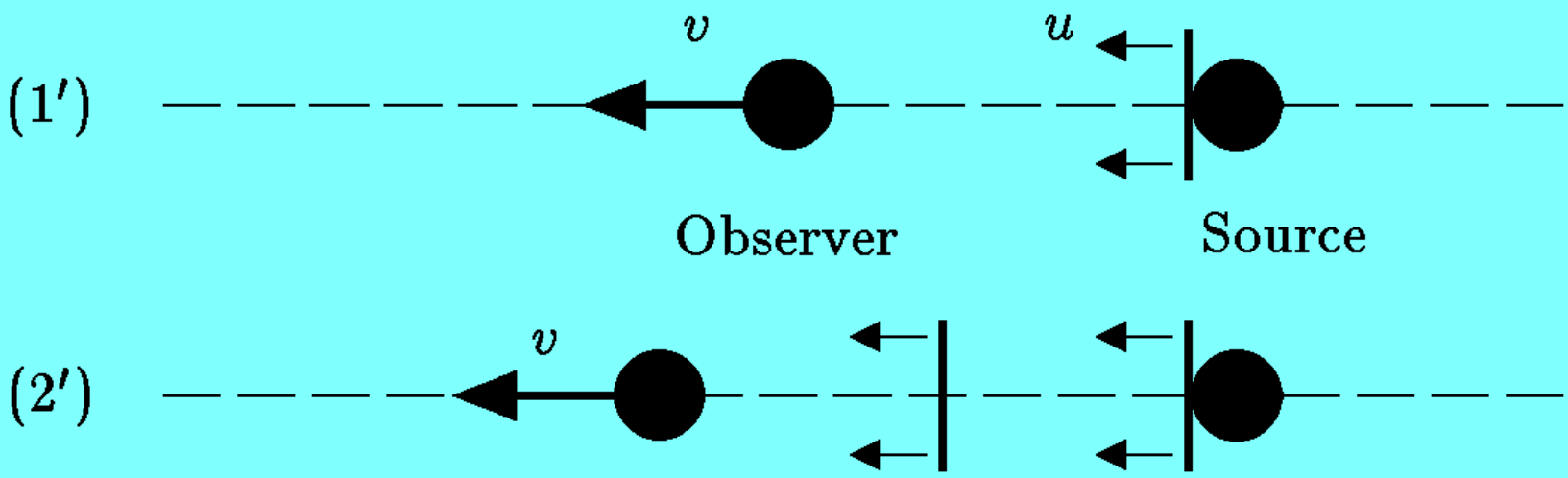
(1′)
v
u
Observer
Source
(2′)
v

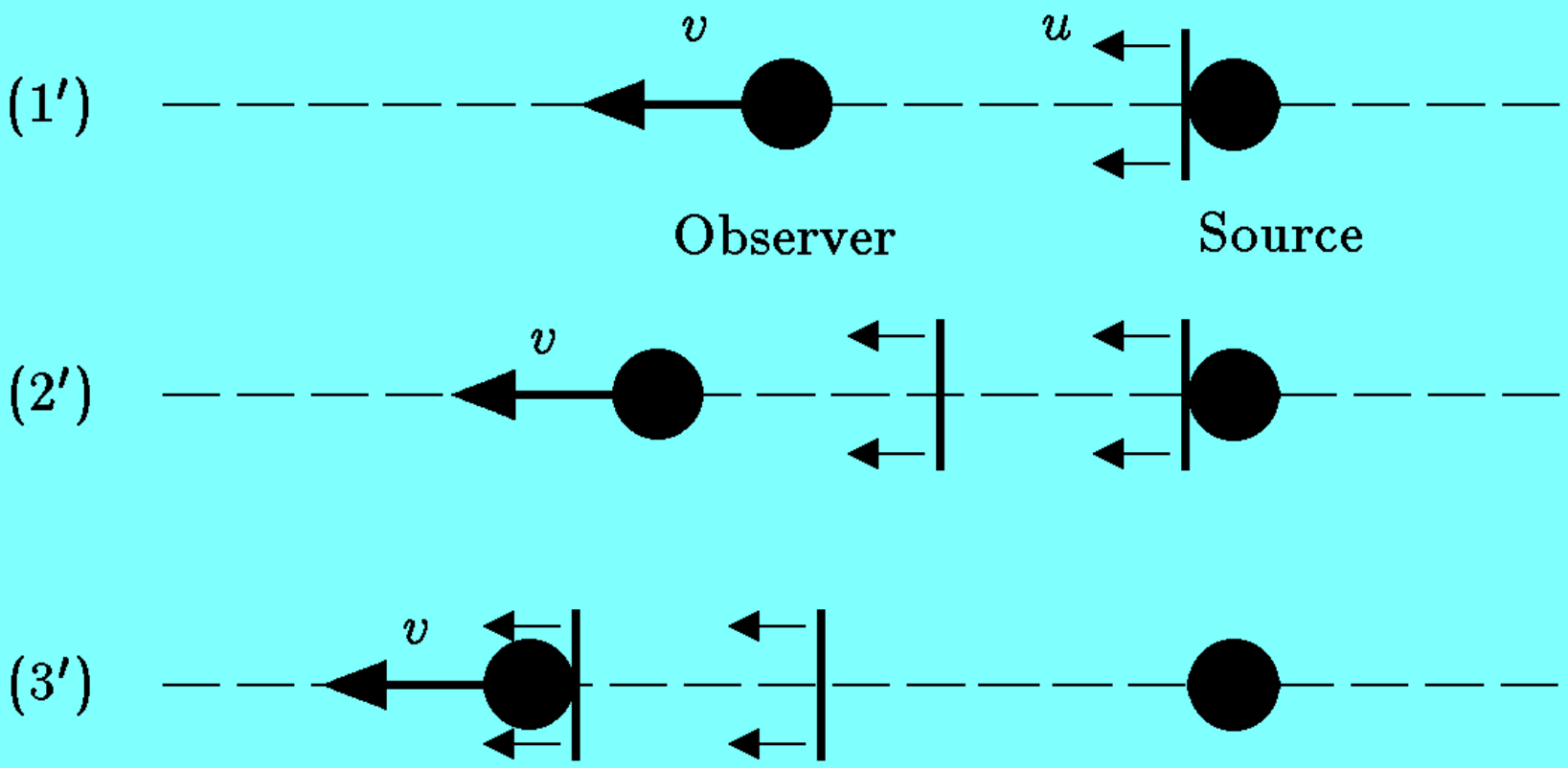
(1′)
v
u
Observer
Source
(2′)
v
(3′)
v

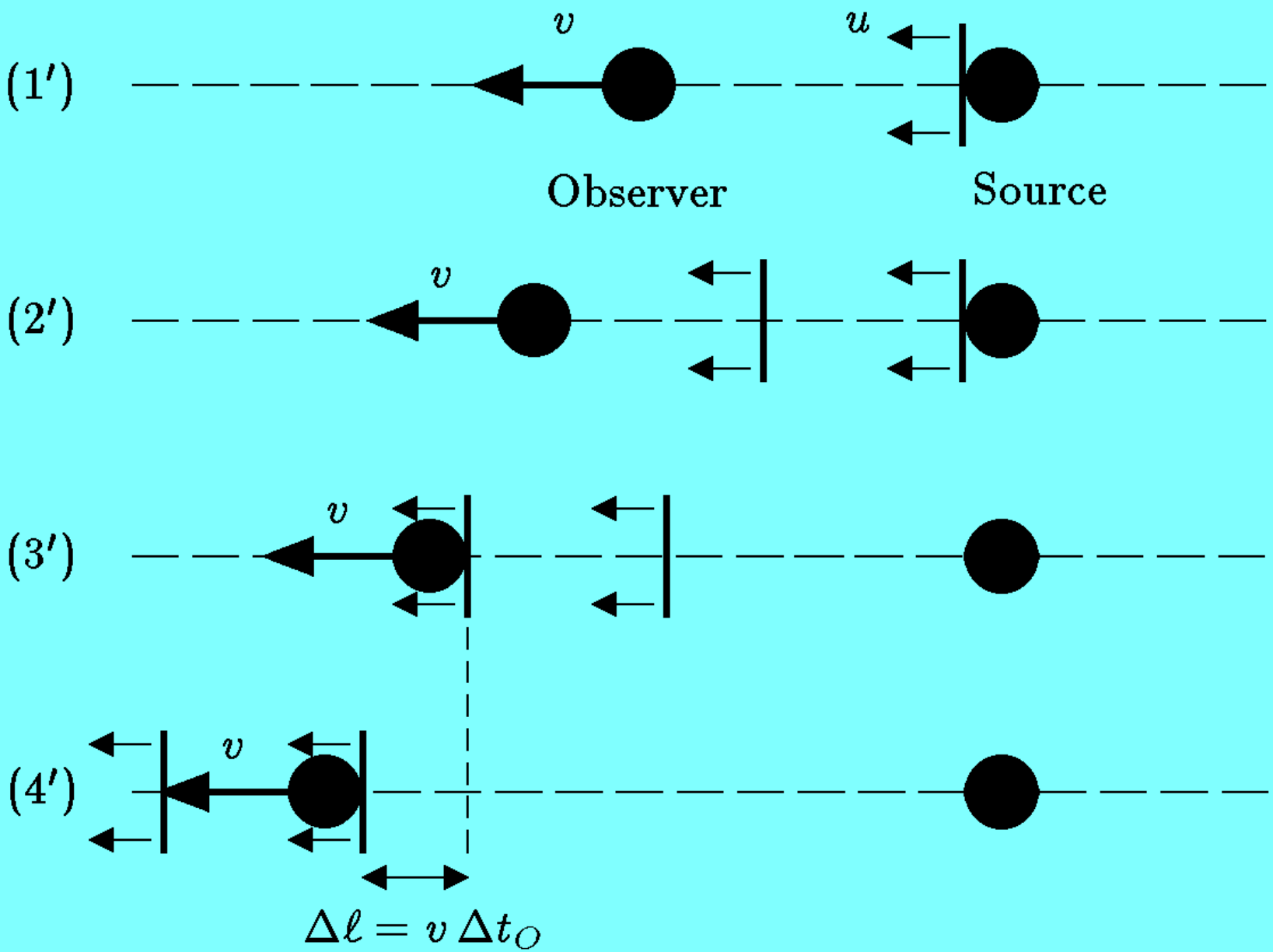
(1′)
v
u
Observer
Source
(2′)
v
(3′)
v
(4′)
v
$\Delta\ell = v\,\Delta t_O$

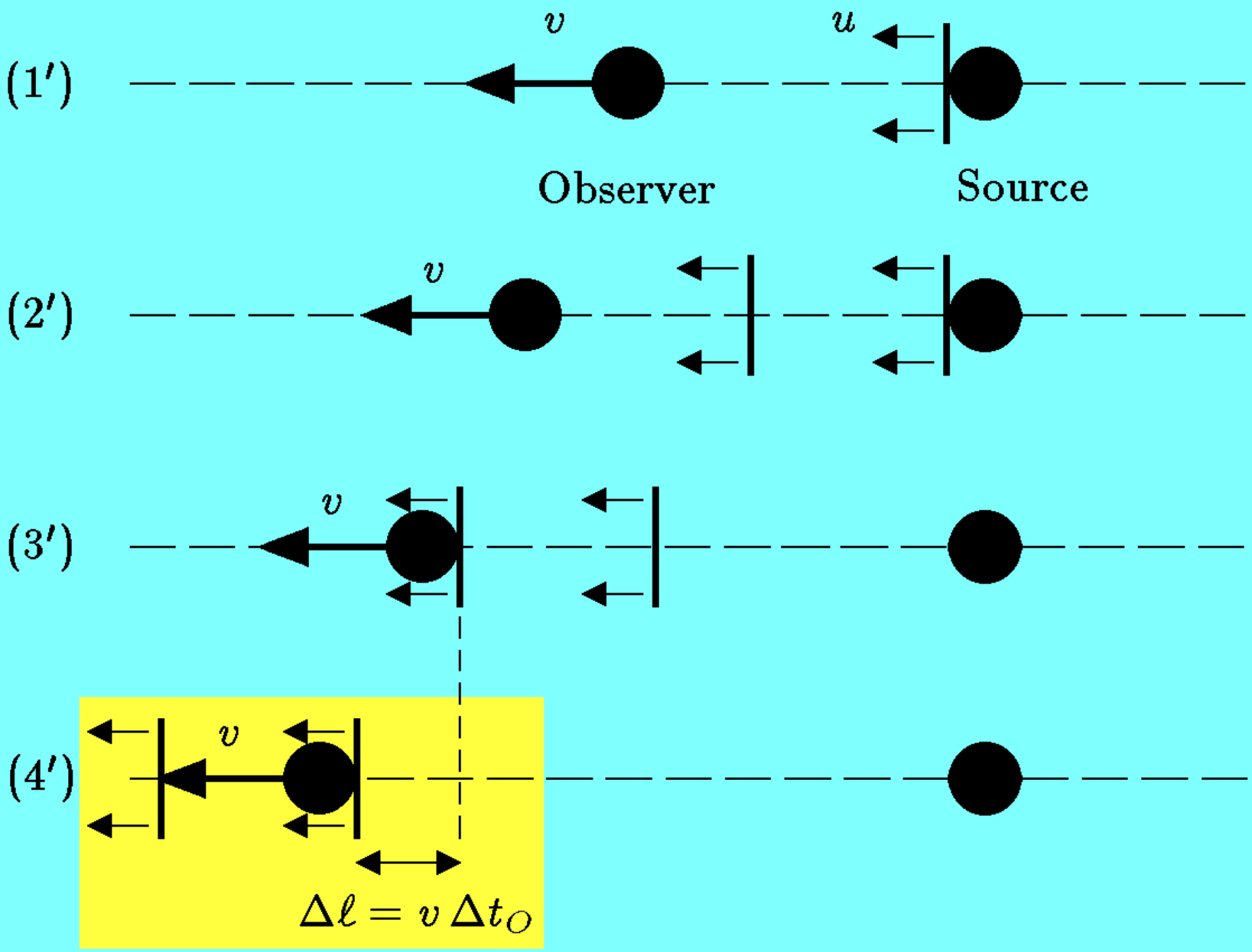
(1′)
v
u
Observer
Source
(2′)
v
(3′)
v
(4′)
v
$\Delta\ell = v\,\Delta t_O$

(1) TIME DILATION: Any clock which is moving at speed v relative to a given reference frame will "appear" (to an observer using that reference frame) to run slower than normal by a factor denoted by the Greek letter γ (gamma), and given by

$$\gamma \equiv \frac{1}{\sqrt{1-\beta^2}} \ , \qquad \beta \equiv v/c \ . \tag{1.10}$$

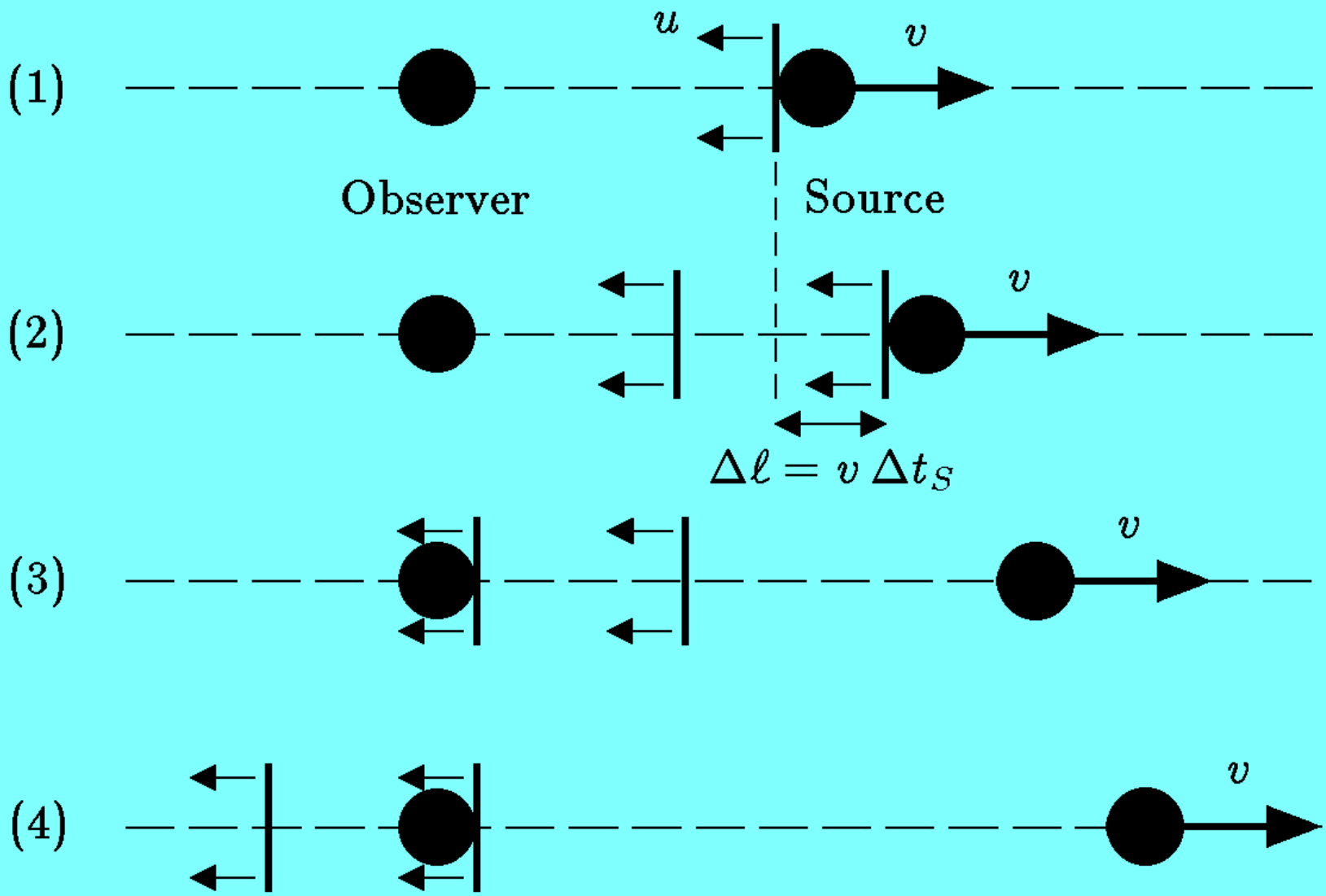
(1)
u
v
Observer
Source
(2)
v
$\Delta\ell = v\,\Delta t_S$
(3)
v
(4)
v

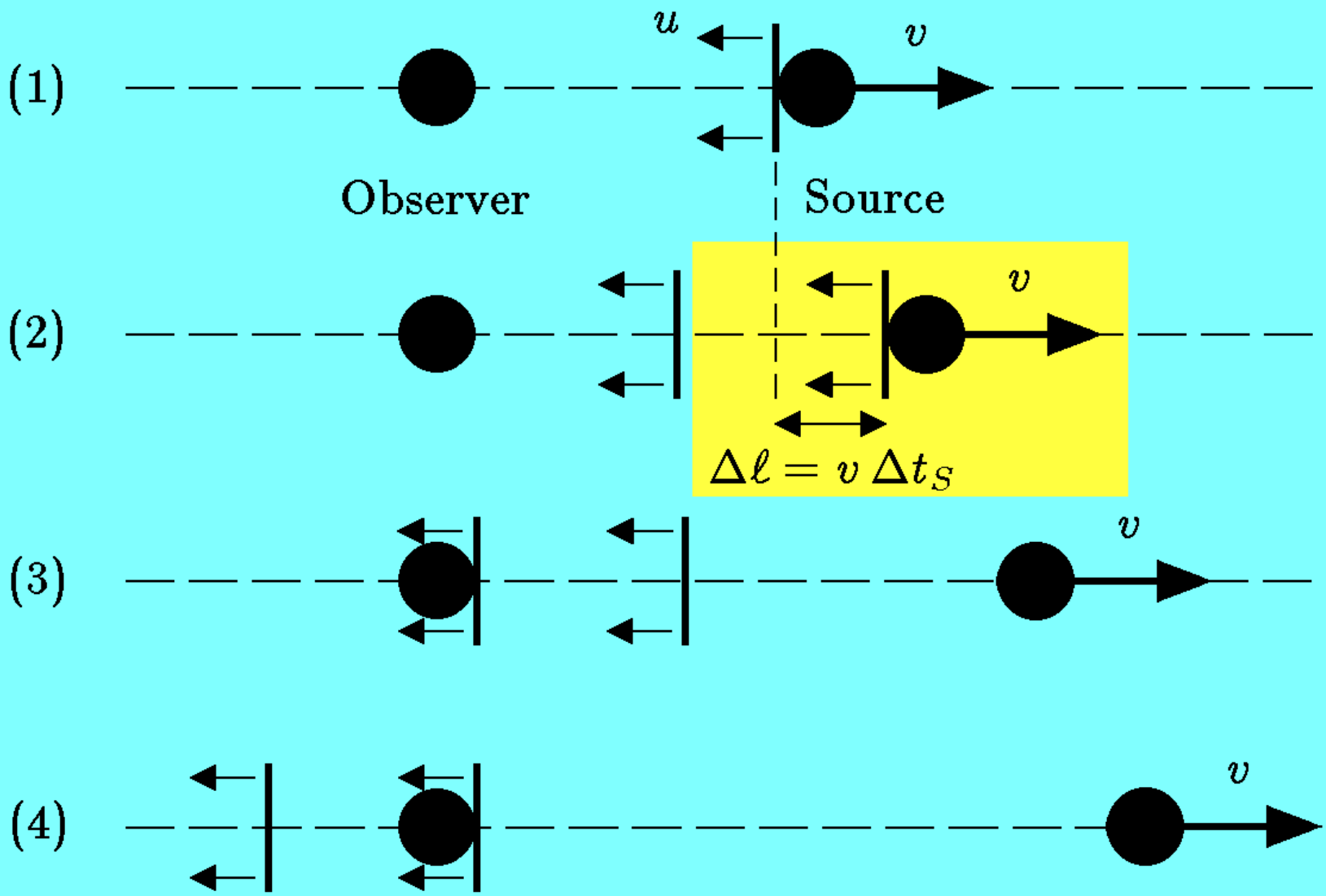
(1)
u
v
Observer
Source
(2)
v
$\Delta\ell = v\,\Delta t_S$
(3)
v
(4)
v

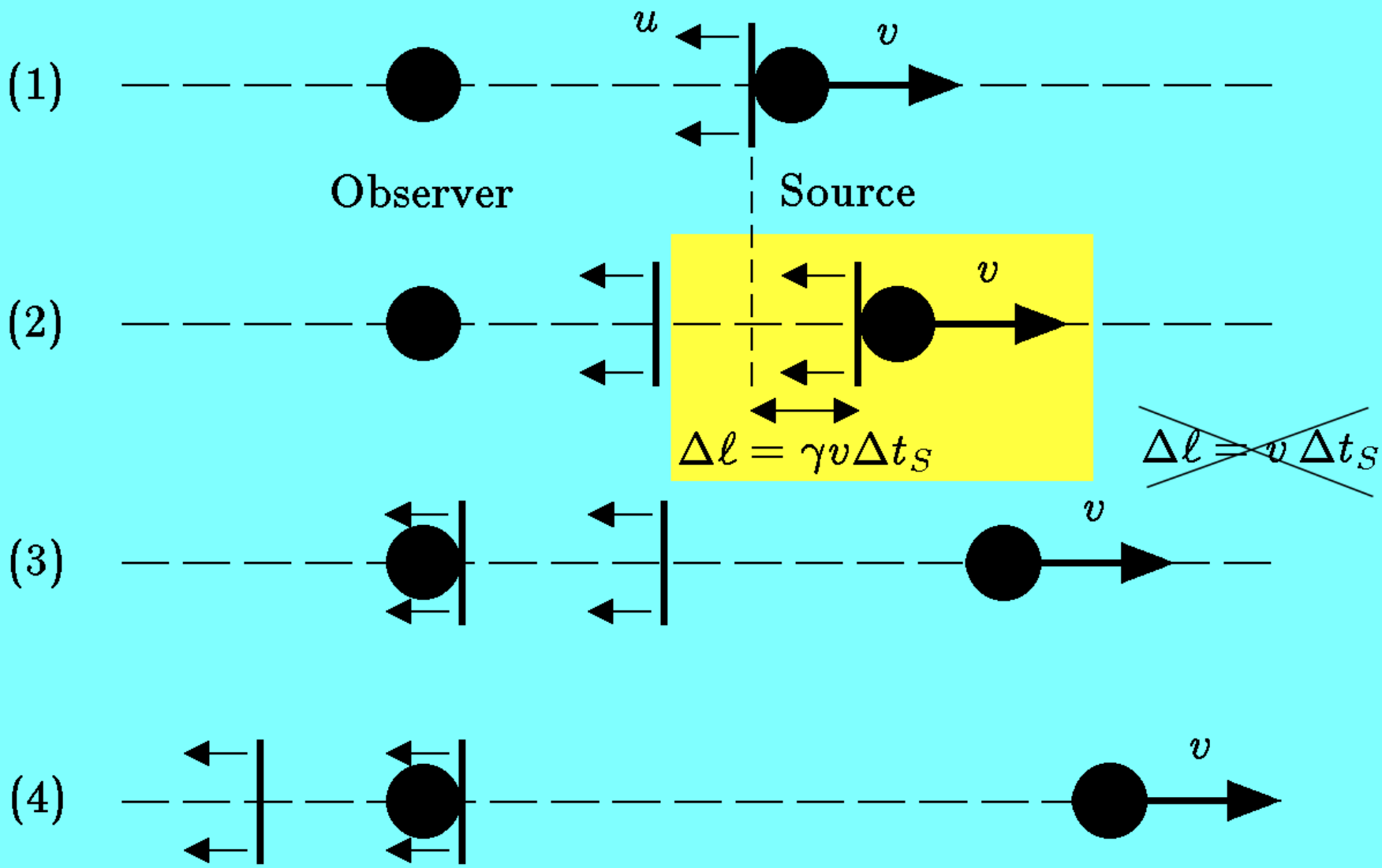
(1)
u
v
Observer
Source
(2)
v
$\Delta\ell = \gamma v \Delta t_S$
$\Delta\ell = v\,\Delta t_S$
(3)
v
(4)
v

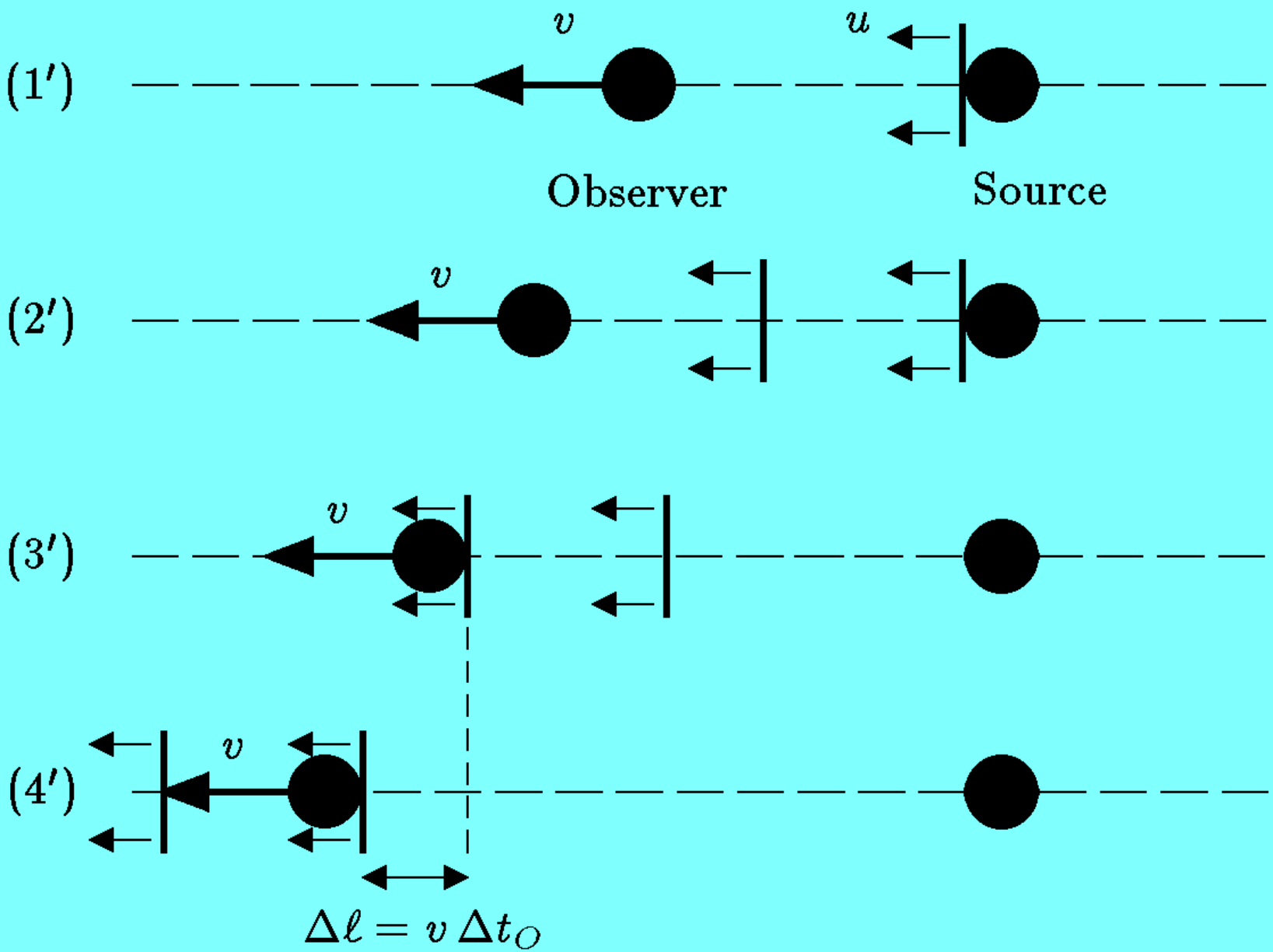
(1′)
v
u
Observer
Source
(2′)
v
(3′)
v
(4′)
v
Δℓ = v Δt_O

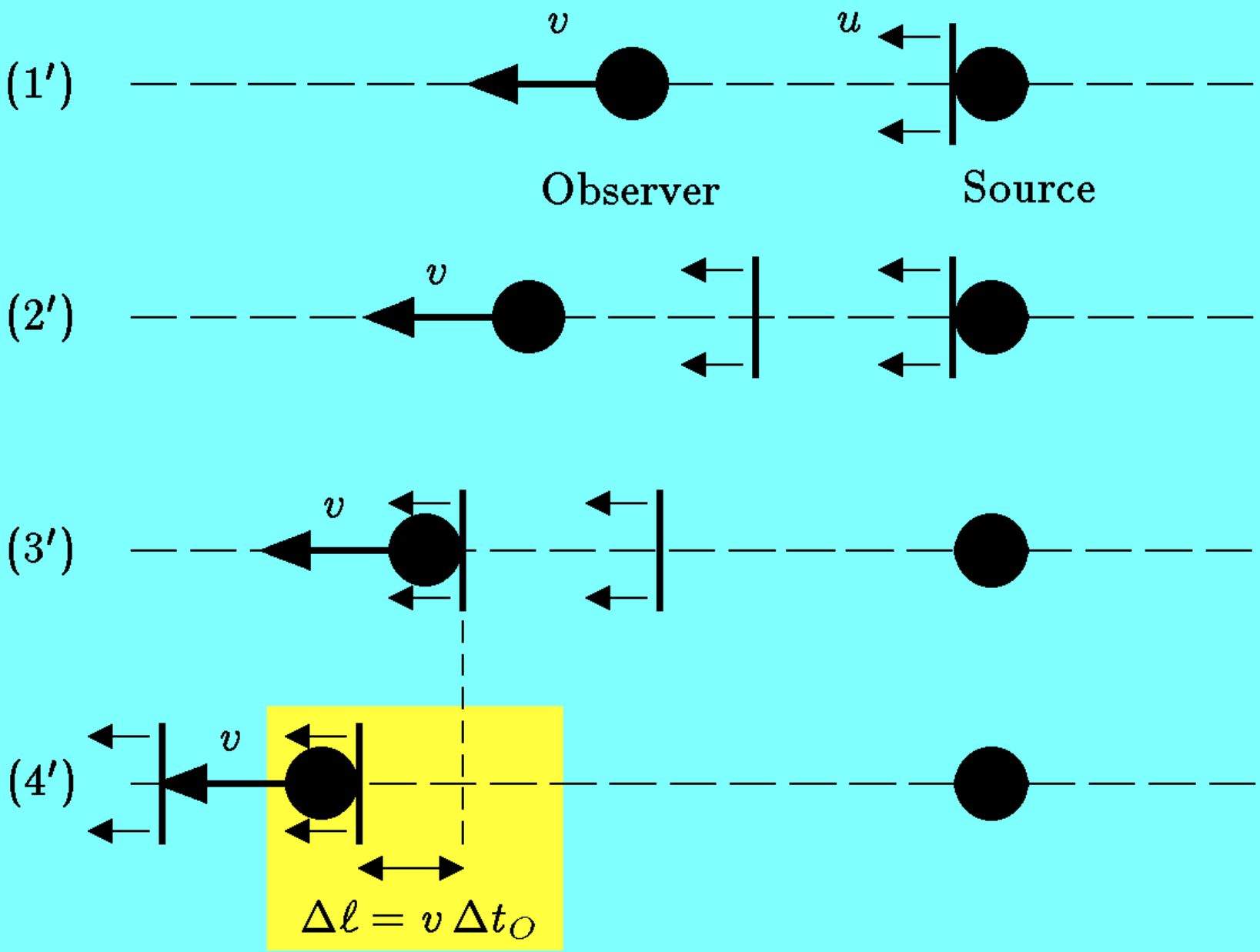
(1′)
v
u
Observer
Source
(2′)
v
(3′)
v
(4′)
v
$\Delta\ell = v\,\Delta t_O$

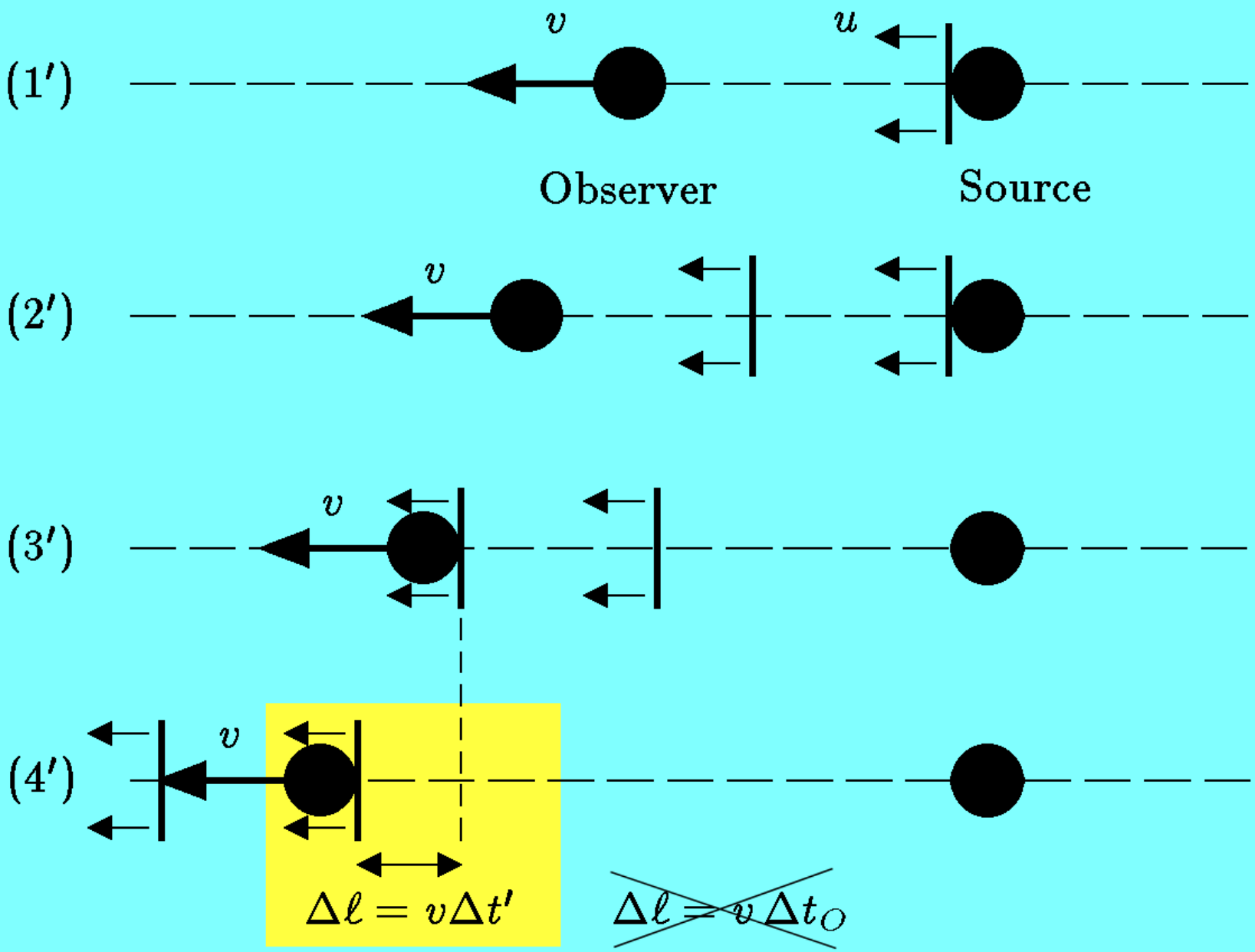

$\Delta t'$ = time between reception of two pulses in frame of the slide.

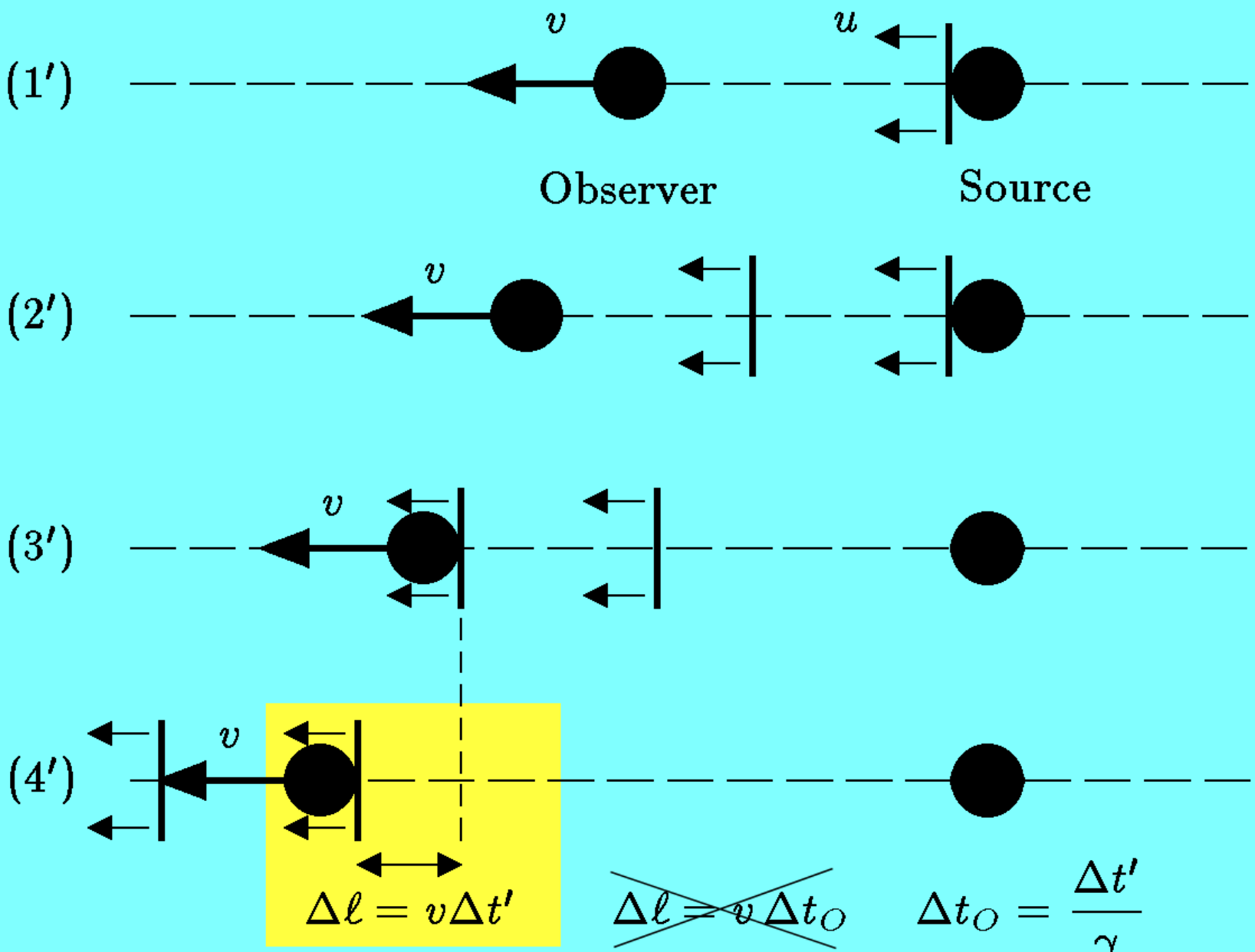

$$\cancel{\Delta\ell = v\Delta t_O} \qquad \Delta t_O = \frac{\Delta t'}{\gamma}$$

$\Delta t'$ = time between reception of two pulses in frame of the slide.

(1) TIME DILATION: Any clock which is moving at speed v relative to a given reference frame will "appear" (to an observer using that reference frame) to run slower than normal by a factor denoted by the Greek letter γ (gamma), and given by

$$\gamma \equiv \frac{1}{\sqrt{1-\beta^2}} \ , \qquad \beta \equiv v/c \ . \tag{1.10}$$

(2) LORENTZ-FITZGERALD CONTRACTION: Any rod which is moving at a speed v along its length relative to a given reference frame will "appear" (to an observer using that reference frame) to be shorter than its normal length by the same factor γ. A rod which is moving perpendicular to its length does not undergo a change in apparent length.

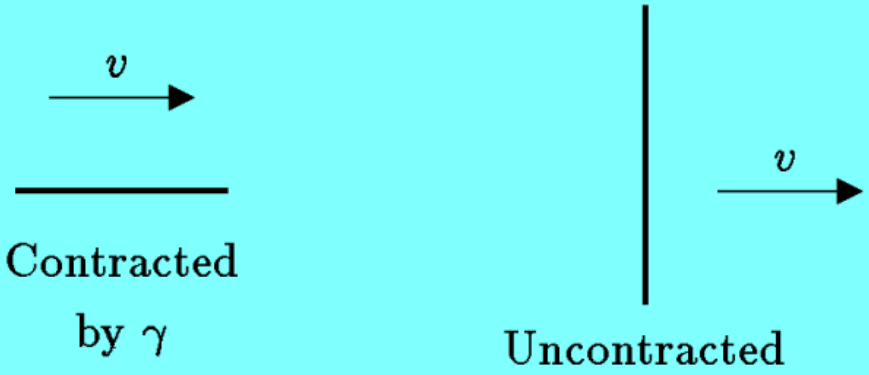
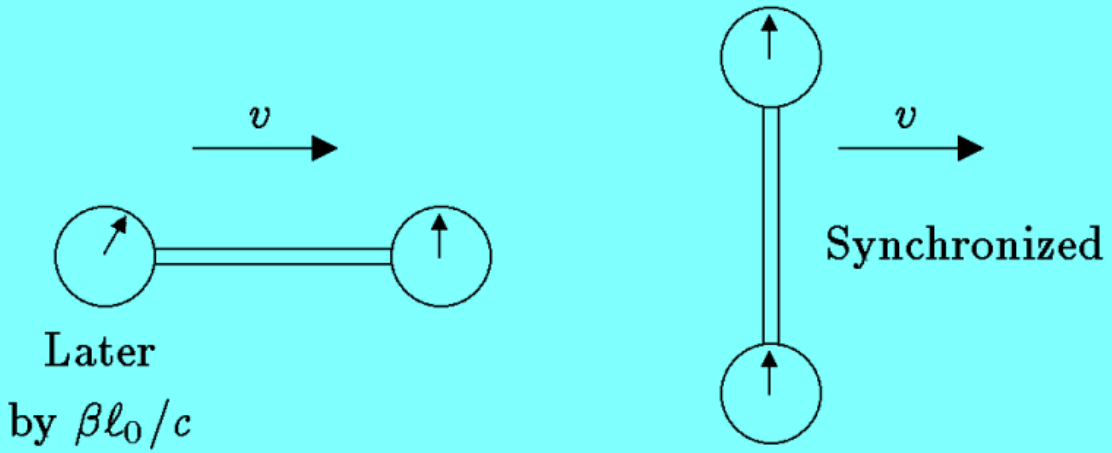
(3) RELATIVITY OF SIMULTANEITY: Suppose a rod which has rest length ℓ_0 is equipped with a clock at each end. The clocks can be synchronized in the rest frame of the system by using light pulses. (That is, a light pulse can be sent out from the center, and the clocks at both ends can be started when they receive the pulses.) If the system moves at speed v along its length, then the trailing clock will "appear" to read a time which is later than the leading clock by an amount $\beta\ell_0/c$. If, on the other hand, the system moves perpendicular to its length, then the synchronization of the clocks is not disturbed.