Environmental Toxicology and Chemistry, Vol. 23, No. 7, pp. 1610–1616, 2004

Printed in the USA
0730-7268/04 $12.00 + .00

PARTICULATE ARSENIC AND IRON DURING ANOXIA IN A EUTROPHIC, URBAN LAKE

DAVID B. SENN*†‡ and HAROLD F. HEMOND‡
†Exposure, Epidemiology, and Risk Program, Department of Environmental Health, Harvard School of Public Health, Boston, Massachusetts 02115, USA
‡Ralph M. Parsons Laboratory, Department of Civil and Environmental Engineering, Massachusetts Institute of Technology, Cambridge, Massachusetts 02139, USA

(*Received* 2 *May* 2003; *Accepted* 19 *December* 2003)

Abstract—The bioavailability and transport of particle-reactive pollutants are influenced by their partitioning between dissolved and particulate phases. We explored the importance of particle complexation to the arsenic cycle in an urban lake (Upper Mystic Lake, eastern MA, USA) that experiences arsenic remobilization from contaminated sediments during seasonal hypolimnetic anoxia. Particle size distributions were measured using a new in situ serial filtration system that excludes oxygen and filters at low flow rates to minimize filtration artifacts. Despite anoxia, the majority of remobilized As was present as As(V), and typically 85 to 95% of total As was particle complexed, with 25 to 50% found in the size fraction between 0.4 and 0.05 μm. Iron was distributed similarly among these size classes (>95% of total Fe associated with particles larger than 0.05 μm, 30 to 50% between 0.4 μm and 0.05 μm), contrary to conventional expectation that the majority of Fe should be present as soluble Fe(II) in anoxic waters. By classical filtration (i.e., through a 0.4-μm filter), the colloidal fractions of both Fe and As would have been inaccurately classified as dissolved. Correlations between depth profiles of total As and particulate Fe as well as comparisons of measured arsenic sorption (i.e., total As > 0.05 μm) against predictions by surface complexation modeling of As on amorphous Fe(III) oxides argue that arsenic sorbed on Fe(III) oxides was the major As species present in this lake's hypolimnion throughout several months of anoxia.

Keywords—Arsenic Iron Lakes Particles Size fractionation

INTRODUCTION

Gravitoids, colloids, and dissolved species

Complexation by particles plays an important role in the cycling and bioavailability of numerous pollutants in lakes. Particles provide surfaces onto which surface-reactive compounds can sorb [1,2]. Gravitoidal particles [2] remove particle-complexed pollutants from the water column through settling [3]. Colloids are, by definition, nonsettleable particles [1] and range in size from nanometers up to several micrometers in diameter, with the size cutoff between gravitoids and colloids in a specific system being a function of turbulent diffusivity [2]. The transport of compounds sorbed to colloids is analogous to that of dissolved substances (i.e., by advection and dispersion). However, over time, colloid aggregation occurs, in which case sorbed compounds may be removed from the water column by settling of these aggregates [4]. In addition, the chemical activity of sorbed compounds is lower than that of the dissolved form. Therefore, to understand the cycling and bioavailability of surface-reactive chemicals, it is necessary to distinguish among gravitoidal, colloidal, and dissolved species.

This information may be particularly important in the case of arsenic, a toxic metalloid [5] that accumulates in lake sediments but subsequently becomes remobilized to overlying waters [6,7]. Arsenic is strongly complexed by particulate hydrous ferric (Fe(III)) oxyhydroxides (HFOs) which are abundant in natural systems. Shifts in redox state alter Fe solubility: Dissolved Fe(III) is maintained at subnanomolar levels by precipitation of HFO (e.g., amorphous ferrihydrite, $Fe^{III}(OH)_{3am}$), while Fe(II) is typically soluble up to 100s of micromolar (in the absence of sulfide) [8]. Upon depletion of oxygen in a lake's hypolimnion, sufficiently reducing conditions can develop at the sediment–water interface to initiate dissimilatory Fe(III) reduction, releasing Fe(II) and previously sorbed As to the water column [9,10]. Under such circumstances, iron and arsenic would conventionally be expected to accumulate in the anoxic water column as Fe(II) [9] and arsenite (As(III)) [6]. However, if upward-diffusing Fe(II) encounters a suitable oxidant (oxygen above the anoxic:oxic interface, settling Mn(III+IV) oxides [9] or nitrate [11]), it may be reoxidized, forming primarily amorphous iron oxides [9,12]. Above the anoxic:oxic interface, abiotic (slow [13]) or biologically mediated [14] As(III) oxidation to As(V) (arsenate) by oxygen may take place. Abiotic oxidation by $Mn^{(IV)}O_2$ is also possible [15]. In addition, recent field observations [11] and pure culture experiments [16,17] indicate that nitrate may be an important As(III) oxidant when nitrate and arsenic co-occur in anoxic waters. Some remobilized arsenic may remain in the dissolved phase, but As(III) and As(V) are also scavenged by the surfaces of freshly precipitated gravitoidal or colloidal HFO [18,19].

Differentiating dissolved, colloidal, and gravitoidal species is difficult, however, because artifacts may be introduced during sample collection and processing [20]. Commonly used filtration protocols (e.g., 0.4-μm filtration) fail to separate colloids from dissolved species and may thereby overestimate dissolved concentrations. Typical field filtration methods (such as syringe filtration at reasonable flow rates, volumes, and suspended solid loads) induce colloid aggregation at the filter surface, causing the filter's size cutoff to decrease with time

* To whom correspondence may be addressed (dbsenn@alum.mit.edu).

[21,22]. In addition, physical alterations (particle aggregation) and chemical changes (oxidation of dissolved iron(II) to particulate Fe(III) by oxygen introduced into anoxic samples) during sampling, storage, and filtration can alter the size distribution of an element of interest.

In this study, we explored the importance of particle complexation to the arsenic cycle in Upper Mystic Lake (UML), a eutrophic, dimictic, kettlehole lake (z_{max} = 24 m; z_{avg} = 15 m; $A_{surface}$ ~ 50 ha; V = 7 × 10^6 m^3) in eastern Massachusetts (~10 miles northwest of Boston, MA, USA). Upstream industrial activity during the past century has contributed approximately 10^4 kg of arsenic to UML [7,23,24], resulting in arsenic-contaminated sediments. Peak As concentrations of 2,000 μg/g have been measured in UML sediment cores, and surface sediments contain approximately 200 μg/g As [7]. During hypolimnetic anoxia, a strong association between arsenic and iron remobilization from the sediments to the water column has been demonstrated [25,26]. Although previous work had shown that much of this As and Fe was smaller than 0.45 μm, the existence of a particle concentration effect suggested that a substantial portion of the filter-passing material was actually colloidal [26].

In UML, we hypothesized the following: Particulate (gravitoidal + colloidal) As and Fe are important in the anoxic hypolimnion during summer/fall stratification; due to sorption by colloids, aqueous As concentrations are far lower than would be inferred by standard 0.4-μm filtration; and sorption of As to Fe(III) oxides in the water column would quantitatively explain the distribution of As between particulate and dissolved phases.

To test these hypotheses, we designed a new in situ serial filtration system to minimize alteration of Fe and As distributions during the collection and low-flow-rate filtration of anoxic waters. Depth profiles of total As, As(III), total Fe, and Fe(II) were obtained. Surface complexation modeling [27] was used to test the hypothesis that sorption by particulate HFO can explain the majority of As distribution between sorbed and aqueous phases.

METHODS AND MATERIALS

In situ serial filtration apparatus

The filtration system (Fig. 1) was designed to minimize opportunities for physical and chemical artifacts, maintaining anoxic conditions by filtering in situ. The device incorporates serial filtration (filtration in series with successively smaller pore-size filters), low flow rates (2.5 ml/min), and polycarbonate membrane filters with well-defined pore sizes, thus, meeting the recommendations of Buffle et al. [20] for minimizing artifacts. The differential between hydrostatic pressure and internal N_2 pressure pushes water through the series of filters at a flow rate that is controlled by adjusting the flow rate of exiting N_2 gas. The filter holders (142 mm polycarbonate, Geotech, Denver, CO, USA) hold 0.4-μm, 0.2-μm, or 0.05-μm polycarbonate membrane filters (Nuclepore, Whatman, Clifton, NJ, USA) arranged in a compact horizontal triangle. Water samples (70 ml) are collected in four polyvinyl chloride reservoirs (~70 ml), one at the inlet and one in-line after each of the three filters. All components are of polycarbonate, nylon, vinyl, polyester, or polyvinyl chloride. The total internal volume of the system is approximately 450 ml, and approximately 300, 200, and 100 ml of lake water passes through the 0.4-, 0.2-, and 0.05-μm filters, respectively, minimizing the potential for clogging. A polyvinyl chloride ball check valve at the inlet to the filtration system prevents water from entering the system when the internal pressure is greater than hydrostatic pressure.

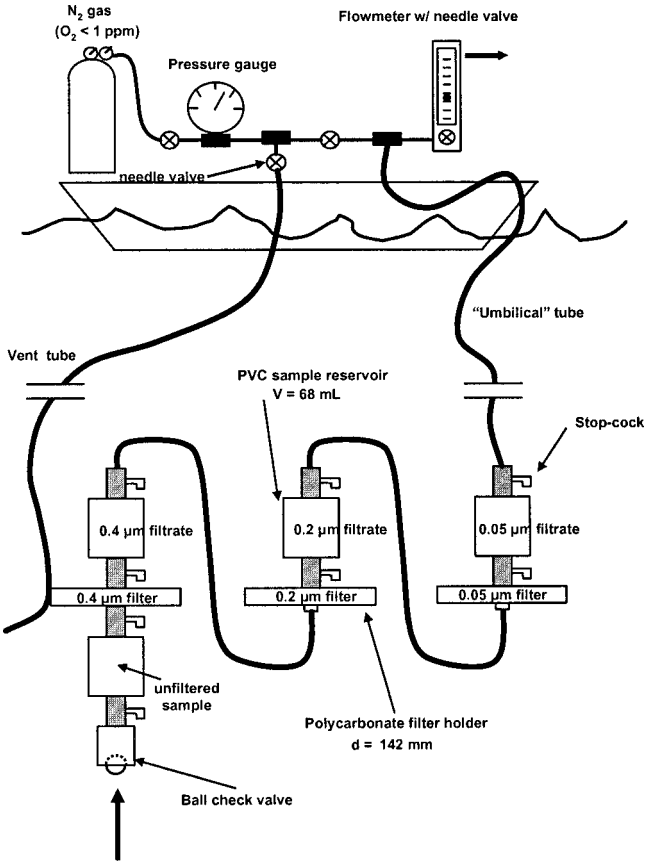

Fig. 1. Schematic of the in situ serial filtration system. Not to scale—size of filtration system greatly exaggerated for clarity. Detailed instructions for operating are presented in Senn [33]. PVC = polyvinyl chloride.

Prior to assembly, all parts of the system that contact sample are acid washed and rinsed with ultrapure Milli-Q water (Bedford, MA, USA). In addition, because plastic that is at equilibrium with the atmosphere may contain some oxygen [28], all plastic components are stored in an anaerobic (N_2) glove box for a minimum of 24 h to allow for oxygen diffusion out of the plastic. The majority of the system is then assembled in the glove box, and afterward is continuously purged with N_2 until deployment (~8–12 h). While 32 to 36 h is insufficient to completely remove oxygen from some plastic that contacts filtering lake water, our calculations indicate that insufficient oxygen will diffuse out of the plastic during the 3 h of filtration to substantially impact Fe redox chemistry in UML water (considering oxygen diffusion kinetics [28] and the kinetics of abiotic Fe(II) oxidation at pH = 6.8, temperature = 5°C [29]). Nevertheless, longer N_2 atmosphere storage times (~one week) may be desirable for other studies.

In the field, the filtration system is pressurized with N_2 in excess of hydrostatic pressure before being gradually lowered to the sampling depth. Filtration is initiated by opening the gas flowmeter at the surface to the proper flow rate, allowing N_2 to flow out of the system at a controlled rate (calculated from internal pressure) that allows water to enter at 2.5 ml/min. Filtration is completed within approximately 3 h, at which point N_2 flow is turned off, and the system returned to the

surface. After the stopcocks on the filtrate reservoirs are closed, the reservoirs are removed from the system and stored on ice. Filtrates are subsampled and analyzed as described below.

Field studies

In situ filtration reproducibility was assessed through a simultaneous deployment of three identical filtration systems at a depth of 20 m on November 20, 1996. On this date, the waters deeper than 15 m had been anoxic (below detection limits, ~5 μM O_2) for more than three months. Twelve additional in situ filtration experiments were carried out at depths of 20 and 22 m during seasonal stratification, including a duplicate filtration (20 m; October 30, 1996).

Conditions in UML were measured throughout spring, summer, and fall of 1997 from a permanent buoy positioned in the deepest region of the lake. Dissolved oxygen, temperature, specific conductance, and pH were measured using a submersible probe unit (Hydrolab MiniSonde, Loveland, CO, USA). In addition to in situ filtration, water samples for depth profiles were collected in acid-cleaned plastic containers by means of a peristaltic pump and acid-washed vinyl tubing, the end of the latter being positioned by attachment to the Hydrolab housing. Samples were transported and stored on ice. Standard in-line filtration (0.4-μm Nuclepore polycarbonate filters) was also conducted at several hypolimnetic depths on each sampling date by attaching a 47-mm plastic filter holder downstream of the pump (1 L/min) and collecting approximately 30 ml of sample.

Arsenite and total arsenic analysis

Samples were analyzed for As(III) within 24 h of collection (except on November 20, 1996 [one week, maintained on ice and in anoxic filtrate reservoir] and June 26, 1997 [48 h] due to instrument difficulties) by hydride generation atomic fluorescence, modifying a selective arsenite reduction scheme [30,31] for use with a continuous hydride generation system (Excalibur, PS Analytical, Orpington, Kent, UK). Tris buffer (0.001 M) maintained an elevated pH (>6) during the reaction, preventing As(V) reduction but allowing As(III) reduction to $AsH_{3(g)}$ by $NaBH_4$ (0.06 M). At the lowest As(III) levels encountered, we conservatively estimate that the absolute As(III) concentrations were measured to within ±50% (a few to several nanomolar As(III), typically representing <10% of total As), a level of variability that has insignificant effects on our conclusions.

Total arsenic was also measured by continuous hydride generation atomic fluorescence ($NaBH_4$ = 0.13 M), but at a pH of approximately 1. Prior to analysis, subsamples for total hydride-reducible As were acidified to a concentration of 1 N HCl, spiked with KI (0.05 M) and ascorbic acid (0.01 M) to reduce As(V) to As(III), and stored at 4°C until analysis. This method does respond to methylated arsenicals (mono- and dimethyl arsenate) as well as inorganic arsenic, but these organic species have not been found at significant concentrations in the UML hypolimnion [25,31] or in other seasonally anoxic hypolimnia (e.g., [32]). Nonhydride reducible organo-arsenicals (e.g., arsenobetaine) are not measured by this technique.

As(V) is calculated as the difference between total hydride-reducible As and As(III).

Total Fe and Fe(II) analysis

Total Fe samples were acidified to 5% HNO_3 and stored at 4°C until analysis by graphite furnace atomic absorption (Perkin-Elmer 4100ZL, Norwalk, CT, USA). The Fe(II) was analyzed aboard the boat immediately upon sample collection (Chemetrics Vacuvials, phenanthroline-based method) using a portable spectrophotometer (Spectronics Mini-Spec 20; Baulkham Hills, NSW, Australia). The Fe(II) absorbance measurements were corrected for background absorbance using an empirical relationship between absorbance (in samples without reagents) and Fe(III) obtained from subsequent field data [33].

Surface complexation modeling

We used a surface complexation model (SCM) [27] and MINEQL$^+$ equilibrium modeling software (Ver 4.07; Environmental Research Software, Hallowell, ME, USA) to model As sorption by HFO. In the SCM, average characteristics for HFO density and surface area determine the number of surface sites per mole of Fe(III) [SETAC Supplemental Data Archive, Item ETC-23-7-001; http://etc.allenpress.com]. Surface sites exhibit acid base chemistry (≡Fe-OH, ≡Fe-OH_2^+ and ≡Fe-O^-), and apparent pK_a values are calculated based on intrinsic pK values and charge by a double-layer electrostatic model. We considered arsenic sorption on HFO to be the only important arsenic complex (Supplemental Data 1A, Eqns. 2–4). Competing anions (most importantly PO_4^{3-}) and cations, as well as other As(III) and As(V) sorbents and dissolved arsenic complexes, were not considered in the model. Sorption constants in Supplemental Data 1A were used to estimate As(III) and As(V) complexation; the standard MINEQL$^+$ thermodynamic database was used for the remainder of complexation calculations and for calculation of the coulombic correction term. Inputs to the SCM are described in Supplemental Data 1B. No temperature corrections were made (MINEQL$^+$ constants are for T = 20–25°C while UML bottom waters were T ~ 5°C) because ΔH° values for HFO surface reactions are not available.

RESULTS AND DISCUSSION

Fe and As remobilization

The water column of UML is generally well mixed during late winter and early spring, with relatively low As concentrations present (5–10 nM; [31,33]). A thermocline typically develops during April and the lake remains thermally stratified through December [26,33]. After the onset of thermal stratification, dissolved oxygen concentrations gradually decrease in the hypolimnion, reaching detection limits (~5 μM) in the deepest several meters by mid- to late July [33]. Both Fe and As remobilization begin in early summer (e.g., June 26, 1997; Fig. 2A and E) following oxygen depletion in the near-bottom waters, and Fe and As concentrations increase throughout late summer and fall (Fig. 2A–H).

Counter to conventional expectation, however, little of the Fe in the anoxic water column was present as Fe(II) in 1997. The Fe(II) was 5 to 10 times less than 0.4-μm–filterable Fe (i.e., d_{eff} < 0.4 μm; Fig. 2A–D), except in a few instances (e.g., 23.8 m on November 18, 1997), arguing that most of the filterable iron was colloidal. In the deeper anoxic waters, As(III) represented only a small percentage (5–10%) of remobilized As (Fig. 2E–H). Twenty-five to 50% of remobilized iron and arsenic, measured by conventional in-line filtration, were smaller than 0.4 μm. Similar observations (low Fe(II), low As(III)) have been made during other years (1991, 1994, 1998, 1999; [11,26,31,33]).

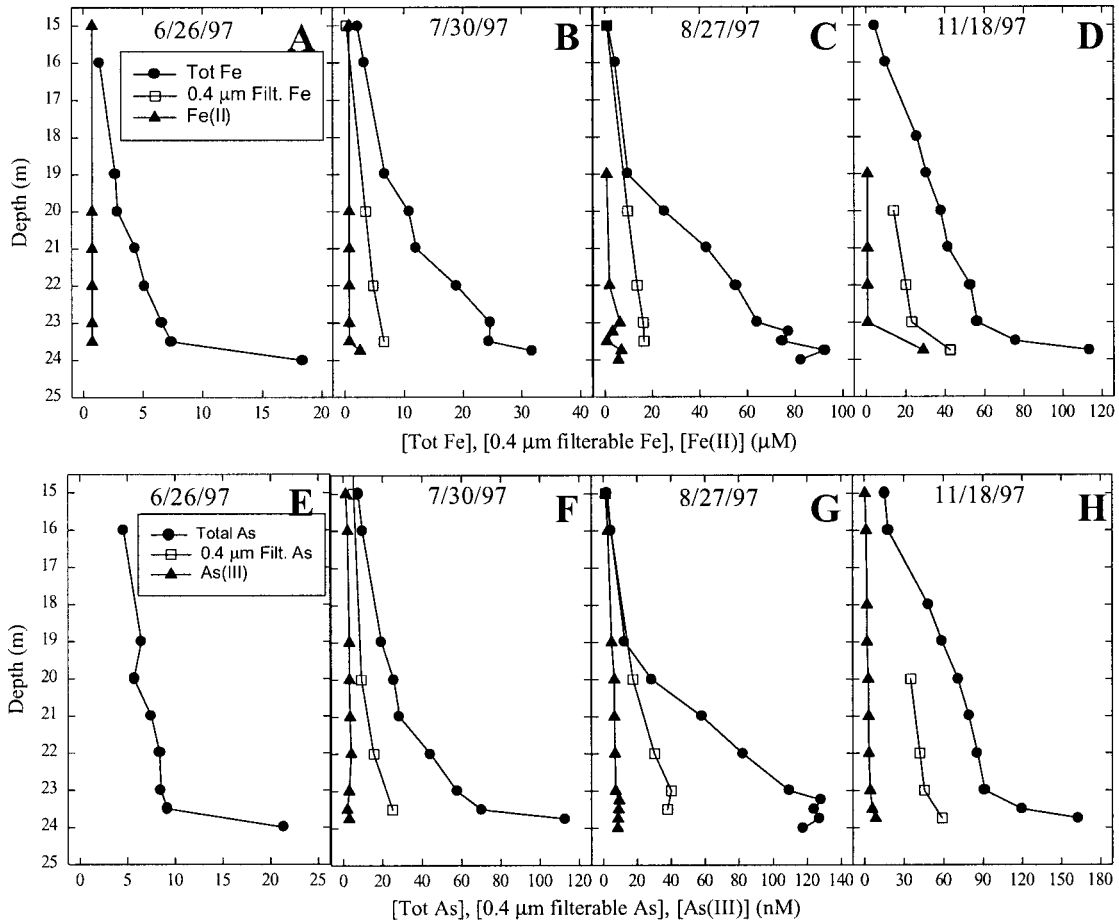

Fig. 2. Depth profiles of Fe and As. (**A**–**D**) Total Fe, 0.4-μm filterable Fe, and Fe(II); (**E**–**H**) total As, 0.4-μm filterable As, and $As(III)_{measured}$. Total arsenic was constant with depth prior to stratification (~6 nM; May 22, 1997). Note varying scale of *x*-axis.

Fe and As size distributions

During summer and fall stratification, only a small percentage of remobilized Fe accumulated in the $d_{eff} < 0.05$-μm size fraction (Fig. 3A–C). Instead, most of the Fe was distributed between the $d_{eff} > 0.4$-μm, 0.4-μm $> d_{eff} >$ 0.2-μm, and 0.2-μm $> d_{eff} >$ 0.05-μm size fractions. Filters (especially the 0.4-μm filter) visually inspected immediately after retrieving the samples were typically stained orange and/or had trapped orange particles; and unfiltered water collected from deeper than 18 to 19 m after the onset of anoxia had an orange tinge. Both observations indicate the presence of HFO. The Fe(II) concentrations were comparatively low (Fig. 2A–D) and approximately equal to 0.05-μm filtrate Fe concentrations, confirming the minor importance of dissolved Fe and supporting the conclusion that most Fe was particulate. Colloidal Fe represented 20 to 30% of particulate Fe (Fig. 3A–C). This sizeable colloidal Fe pool is consistent with observations made in seasonally anoxic, eutrophic Lake Bret (Switzerland) by transmission electron microscopy [34–36].

Analogous to Fe, the vast majority of remobilized As was measured in particle size fractions larger than 0.05 μm (Fig. 3D–F). During late summer and early fall (September–November 1997), 25 to 60% of As was found to be smaller than 0.4 μm by in-line filtration (Fig. 2E–H). However, the additional size distribution data provided by the in situ filtration system demonstrated that the majority of the As smaller than 0.4 μm was actually colloidal, not dissolved.

In situ filtration system reproducibility

The filtration system yielded highly reproducible iron and arsenic filtrate concentrations (November 20, 1996; Fig. 3B and E) during the triplicate filtration experiment (standard deviation $< \pm 10\%$, except standard deviation of [Fe $<$ 0.05 μm] was 0.3 μM, or 14% of the mean). This degree of precision was obtained despite the fact that system 1 filtered at a rate in excess of design due to extra N_2 venting from a leak at the surface, arguing that the filtration velocity that we used was conservatively low. A duplicate filtration experiment was also conducted during fall stratification, and good agreement was again observed for Fe and As filtrates (October 30, 1996; Fig. 3B and E), except for a difference in the 0.05-μm As filtrates that we suspect was due to a small amount of contamination (see below).

During late summer and fall stratification (i.e., late July through late November), iron-size distributions were highly consistent over time and at both 20 and 22 m. In general, the As size distributions were also highly consistent, temporally and spatially, with only small percentages of As present in the 0.05-μm filtrate. In three early filtration experiments (22 m on August 7, 1996; 20 m on October 11, 1996; and possibly 20

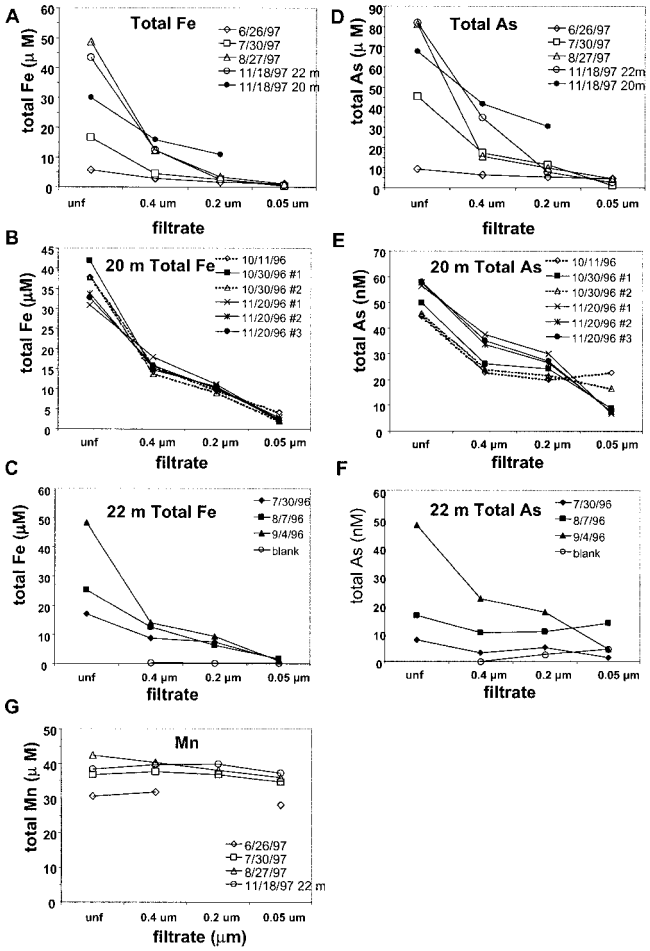

Fig. 3. In situ filtration size distribution (**A**) total Fe, 1997; (**B**) 20 m total Fe, 1996; (**C**) 22 m total Fe, 1996; (**D**) 22 m total As, 1997; (**E**) 20 m total As, 1996; (**F**) 22 m total As, 1996; (**G**) 22 m total Mn, 1997. On July 30, 1996, August 7, 1996, and September 4, 1996, unfiltered Fe and As concentrations are from pumped samples. On November 20, 1996, unfiltered Fe and As are from the filtration system unfiltered reservoir. For all other dates, the unfiltered Fe and As values are averages of pumping and unfiltered reservoir concentrations.

m system 2 on October 30, 1996; Fig. 2E–F), the 0.05-μm filtrate arsenic concentrations were comparable to or greater than that in the 0.2-μm filtrates. This was likely due to low-level, sporadic As contamination, as suggested by results from a laboratory test (Fall 1996) in which Milli-Q water was filtered through the entire system and total As (but not Fe) was found to be elevated in the 0.2-μm and 0.05-μm filtrates (blank; Fig. 3C and F). Beginning in 1997, all filters were acid washed and rinsed with Milli-Q water before use. No indications of contamination were evident in 1997.

The in situ filtration system measurements of 0.4-μm filtrate Fe and As at 22 m (Fig. 3A and D) also agree reasonably well with the in-line 0.4-μm filtrate concentrations (Fig. 2) at that depth.

The filtration system appears to pass dissolved metals without difficulty. Manganese (Mn) is mobilized from hypolimnetic sediments during seasonal anoxia in a manner analogous to that of Fe [10,37]. At 22 m, the vast majority of Mn was 0.05-μm filterable (Fig. 3G), consistent with it being present as dissolved Mn^{2+} and implying that the majority of Mn remained in its reduced form after diffusing from the sediments. The evident lack of Mn(II) oxidation is expected on the basis of observations made in anoxic hypolimnia of other eutrophic lakes [38,39] and is consistent with the higher pe° of the $Mn(II)/Mn^{(IV)}O_2$ redox couple compared with that of $Fe(II)/Fe^{(III)}(OH)_{3(am)}$ [29].

Total iron and total As measured in the unfiltered sample reservoir of the filtration system were systematically 25 to 40% and 2 to 10%, respectively, less than the total obtained by pumping water from the same depths during 1997. The differences may be due to uncertainty in the sampling depth and to exclusion of larger particles by the filtration system because of its slower intake velocity (intake velocity at the check valve entrance was a factor of 300 less than the intake velocity at the pump tubing edge). For calculations involving filtration data (including SCM), the average unfiltered concentration from the two sampling techniques has been used, which has an insignificant impact on our conclusions (see Supplemental Data 1B).

Origins of particulate Fe and As

Both Fe and As accumulated predominantly in their oxidized forms (Fe(III) and As(V)) in the anoxic water column (Fig. 2). Because Fe must have been released to the water column as Fe(II), these data indicate that Fe(II) was being anaerobically oxidized to HFO upon entering the water column. Similarly, As(V) dominance suggested that remobilized As(III) was being anaerobically oxidized, although direct As(V) remobilization cannot be entirely ruled out [40]. We report, elsewhere, evidence that nitrate is the oxidant for Fe(II) and As(III) in the anoxic water column, with significant accumulation of the reduced species only occurring after nitrate depletion (very late fall) [11].

Scavenging of As by HFO particle surfaces (and/or coprecipitation) is the most reasonable explanation for the dominance of particle-complexed arsenic in the hypolimnion, considering the following: HFO strongly sorbs inorganic arsenic [18], and sorption equilibrium can be established in hours; abundant Fe was present as particulate HFO, and a large colloidal HFO pool (10 s of micromolar) persisted in the hypolimnion throughout anoxia; and there is a strong spatial and seasonal correlation between remobilized particulate Fe and total As profiles in 1997 (Fig. 4A), consistent with previous observations in UML [26].

Measured As sorption versus SCM sorption

The general close agreement shown in Figure 4B between SCM and measured particulate As supports the hypothesis that HFO is sufficient to explain observed particulate As ($[As_{total} > 0.05\ \mu m]_{measured}$). Although no additional sorbents are necessary to explain the concentration of particulate phases, a minor role for other As sorbents (e.g., particulate organic carbon) cannot be ruled out. The results also indicate that SCM of As sorption by HFO provides a better measure of particulate As than does classical 0.4-μm filtration, which, as hypothesized, was found to consistently underestimate particle-complexed arsenic (Fig. 4B).

Extension to other depths

The SCM was used to model As(III) and As(V) distribution between sorbed and aqueous phases over the bottom 9 m of the lake (using depth-specific inputs, Supplemental Data 1B) at depths where filtration data do not exist. The $As(V)_{sorbed}$ is the dominant As species in the hypolimnetic water column (Fig. 4C). Interestingly, despite the fact that $As(V)_{total} \gg$

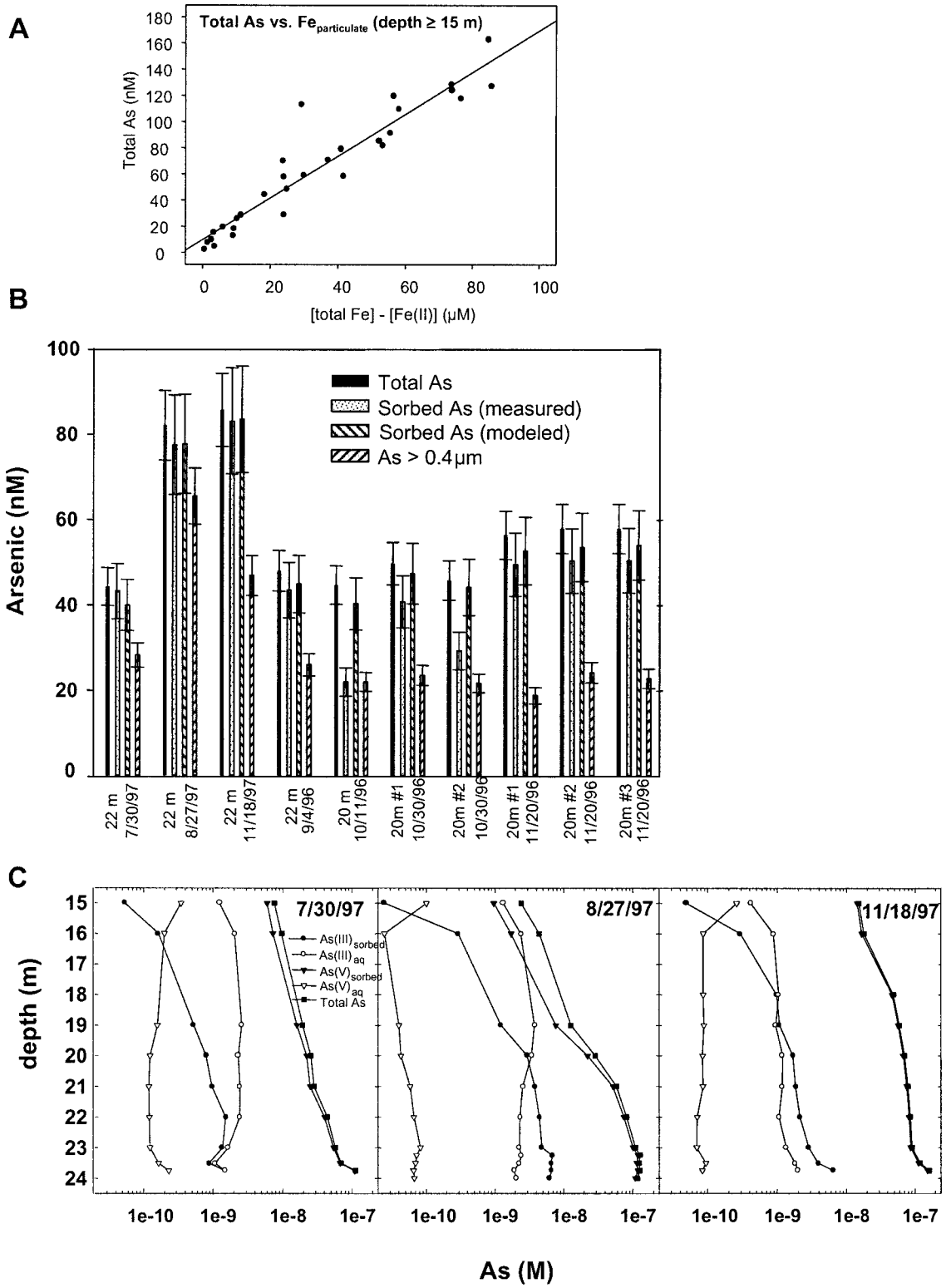

Fig. 4. (**A**) Correlation between total As and Fe(III) from 1997 depth profiles (below 15 m). (**B**) Total As, measured particle-complexed As, modeled particle-complexed As, and particle-complexed As larger than 0.4 μm for 1996 and 1997 filtration experiments. Total measurement uncertainty estimated from method uncertainty and replicate sample variability. Model uncertainty estimated from analysis of sensitivity to model inputs. (**C**) Surface complexation modeling output of As(III) and As(V) distribution between sorbed and aqueous phases for the hypolimnion in 1997. Note: log scale for *x*-axis.

$As(III)_{total}$, $As(III)_{aq}$ dominated the dissolved As pool, typically 10 to 100 times greater than $As(V)_{aq}$. With increases in total Fe, $As(III)_{sorbed}$ became a more important component, representing 50 to 80% of $As(III)_{total}$ below 20 m on August 27, 1997, and November 18, 1997. By November 18, 1997, despite several months of anoxia, greater than 95% of total As remained complexed by Fe(III) oxides in the bottom 9 m of the lake.

CONCLUSION

We developed a straightforward method for conducting in situ serial filtration of anoxic waters that excludes O_2 and meets criteria for minimizing filtration artifacts [20]. In situ filtration measurements, confirmed by Fe redox chemistry measurements and SCM of As sorption of HFO, indicate that 80 to 95% of remobilized Fe and As are present as particulate material throughout several months of anoxia in hypolimnetic waters. A large fraction (25–50%) of the particulate Fe and As was colloidal, and would have been classified as dissolved had 0.4-μm filtration been used to differentiate between particulate and dissolved phases. The dominance of particle-complexed arsenic can have major implications for arsenic transport and bioavailability. In addition, because HFO is a strong sorbent for other pollutants (e.g., Pb, Cd, Cu, PO_4^{3-} [27]), the persistence of particulate Fe may also have implications for their transport and bioavailability.

REFERENCES

1. Buffle J, Leppard GG. 1995. Characterization of aquatic colloids and macromolecules. 1. Structure and behavior of colloidal material. *Environ Sci Technol* 29:2169–2175.
2. Gustafsson O, Gschwend PM. 1997. Aquatic colloids: Concepts, definitions, and current challenges. *Limnol Oceanogr* 42:519–528.
3. Sigg L, Sturm M, Kistler D. 1987. Vertical transport of heavy metals by settling particles in Lake Zurich. *Limnol Oceanogr* 32: 112–130.
4. Honeyman BD, Santschi PH. 1991. Coupling adsorption and particle aggregation: Laboratory studies of ''colloidal pumping'' using ^{59}Fe-labeled hematite. *Environ Sci Technol* 25:1739–1747.
5. Ferguson JF, Gavis J. 1972. A review of the arsenic cycle in natural waters. *Water Res* 6:1259–1274.
6. Aggett J, Kriegman MR. 1988. The extent of formation of As(III) in sediment interstitial waters and its release to hypolimnetic waters in Lake Ohakuri. *Water Res* 4:407–411.
7. Spliethoff HM, Hemond HF. 1996. History of toxic metal discharge to surface waters of the Aberjona Watershed. *Environ Sci Technol* 30:121–128.
8. Morel FMM, Hering JG. 1993. *Principles and Applications of Aquatic Chemistry*. John Wiley, New York, NY, USA.
9. Davison W. 1993. Iron and manganese in lakes. *Earth Sci Rev* 34:119–163.
10. Lovley DR. 1991. Dissimilitory Fe(III) and Mn(IV) reduction. *Microbiol Rev* 55:259–287.
11. Senn DB, Hemond HF. 2002. Nitrate controls on iron and arsenic in an urban lake. *Science* 296:2373–2376.
12. Davison W, DeVitre R. 1992. Iron particles in freshwater. In Buffle J, van Leeuwen HP, eds, *Environmental Particles*, Vol 1. Lewis, Boca Raton, FL, USA, pp 315–355.
13. Scudlark JR, Johnson DL. 1982. Biological oxidation of arsenite in seawater. *Estuar Coast Shelf Sci* 14:693–706.
14. Wilkie JA, Hering JG. 1998. Rapid oxidation of geothermal arsenic(III) in streamwaters of the eastern Sierra Nevada. *Environ Sci Technol* 32:657–662.
15. Scott MJ, Morgan JJ. 1995. Reactions at oxide surfaces. 1. Oxidation of As(III) by synthetic birnessite. *Environ Sci Technol* 29:1898–1905.
16. Hoeft SE, Lucas F, Hollibaugh JT, Oremland RS. 2002. Characterization of microbial arsenate reduction in the anoxic bottom waters of Mono Lake, California. *Geomicrobiol J* 19:1–18.
17. Oremland RS, Hoeft SE, Santini JA, Bano N, Hollibaugh RA, Hollibaugh JT. 2002. Anaerobic oxidation of arsenite in Mono Lake water and by facultative, arsenite-oxidizing chemoautotroph, strain MLHE-1. *Appl Environ Microb* 68:4795–4802.
18. Pierce ML, Moore CB. 1982. Adsorption of arsenite and arsenate on amorphous iron hydroxide. *Water Res* 16:1247–1253.
19. Raven KP, Jain A, Loeppert RH. 1998. Arsenite and arsenate adsorption on ferrihydrite: Kinetics, equilibrium, and adsorption envelopes. *Environ Sci Technol* 32:344–349.
20. Buffle J, Perret D, Newman M. 1992. The use of filtration and ultrafiltration for size fractionation of aquatic particles, colloids, and macromolecules. In Buffle J, van Leeuwen HP, eds, *Environmental Particles*, Vol 1. Lewis, Boca Raton, FL, USA, pp 171–230.
21. Horowitz AJ, Elrick KA, Colberg MR. 1992. The effect of membrane filtration artifacts on dissolved trace element concentrations. *Water Res* 26:753–763.
22. Horowitz AJ, Lum KR, Garbarino JR, Hall GEM, Lemieux C, Demas CR. 1996. Problems associated with using filtration to define dissolved trace element concentrations in natural water samples. *Environ Sci Technol* 30:954–963.
23. Aurilio AC, Durant JL, Hemond HF, Knox ML. 1995. Sources and distribution of arsenic in the Aberjona Watershed, eastern Massachusetts. *Water Air Soil Pollut* 81:265–282.
24. Hemond HF. 1995. Movement and distribution of arsenic in the Aberjona Watershed. *Environ Health Perspect* 103:35–40.
25. Spliethoff HM, Mason RP, Hemond HF. 1995. Interannual variability in the speciation of As in a dimictic lake. *Environ Sci Technol* 29:2157–2161.
26. Trowbridge PR. 1995. Rapid redox transformations of arsenic and characterization of the internal seiches in the Upper Mystic Lake, Medford, Massachusetts. Masters thesis. Massachusetts Institute of Technology, Cambridge, MA, USA.
27. Dzombak D, Morel FMM. 1990. *Surface Complexation Modeling: Hydrous Ferric Oxide*. Wiley Interscience, New York, NY, USA.
28. Carignan R, St-Pierre S, Gachter R. 1994. Use of diffusion samplers in oligotrophic lake sediments: Effects of free oxygen in sampler material. *Limnol Oceanogr* 39:468–474.
29. Stumm W, Morgan JJ. 1996. *Aquatic Chemistry*. John Wiley, New York, NY, USA.
30. Andreae MO. 1977. Determination of arsenic species in natural waters. *Anal Chem* 49:820–821.
31. Aurilio AC, Mason RP, Hemond HF. 1994. Speciation and fate of arsenic in three lakes of the Aberjona Watershed. *Environ Sci Technol* 28:577–585.
32. Sohrin Y, Matsui M, Kawashima M, Hojo M, Hasegawa H. 1997. Arsenic biogeochemistry affected by eutrophication in Lake Biwa, Japan. *Environ Sci Technol* 31:2712–2720.
33. Senn DB. 2001. Coupled arsenic, iron, and nitrogen cycling in arsenic-contaminated Upper Mystic Lake. PhD thesis. Massachusetts Institute of Technology, Cambridge, MA, USA.
34. Buffle J, DeVitre RR, Perret D, Leppard GG. 1989. Physicochemical characteristics of a colloidal iron phosphate species formed at the oxic–anoxic interface of a eutrophic lake. *Geochim Cosmochim Acta* 53:399–408.
35. DeVitre RR, Buffle J, Perret D, Baudat R. 1988. A study of iron and manganese transformations at the O2/S(−II) transition layer in a eutrophic lake (Lake Bret, Switzerland): A multimethod approach. *Geochim Cosmochim Acta* 52:1601–1613.
36. Pizarro JP, Belzile N, Filella M, Leppard GG, Negre JC, Perret D, Buffle J. 1995. Coagulation/sedimentation of submicron iron particles in a eutrophic lake. *Water Res* 29:617–632.
37. Johnson CA, Ulrich M, Sigg L, Imboden DM. 1991. A mathematical model of the manganese cycle in a seasonally anoxic lake. *Limnol Oceanogr* 36:1415–1426.
38. Sigg L, Johnson C, Kuhn A. 1991. Redox conditions and alkalinity generation in a seasonally anoxic lake (Lake Greifen). *Mar Chem* 36:9–26.
39. Belzile N, Pizarro J, Filella M, Buffle J. 1996. Sediment diffusive fluxes of Fe, Mn, and P in a eutrophic lake: Contribution from lateral vs. bottom sediments. *Aquat Sci* 58:327–354.
40. Cummings DE, Caccavo F Jr, Fendorf S, Rosenzweig RF. 1999. Arsenic mobilization by the Fe(III)-reducing bacterium *Shewanella alga* BrY. *Environ Sci Technol* 33:723–729.