REVISIONS				
ZONE	REV.	DESCRIPTION	DATE	APPROVED
	A	RELEASE FOR MANUFACTURE	12/2/2014	C. VIDAL

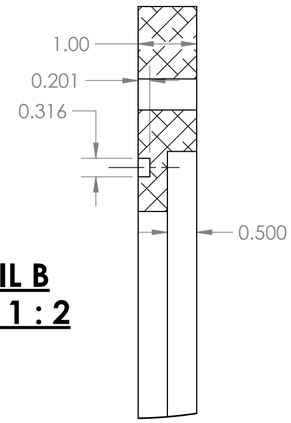

DETAIL B
SCALE 1 : 2

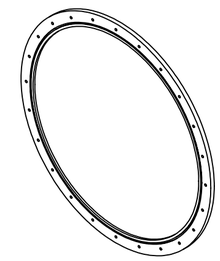

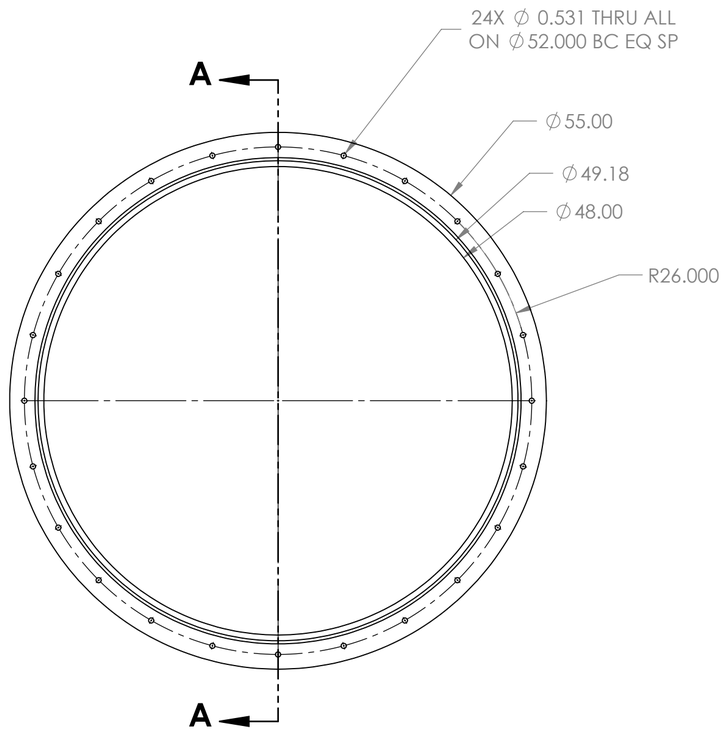

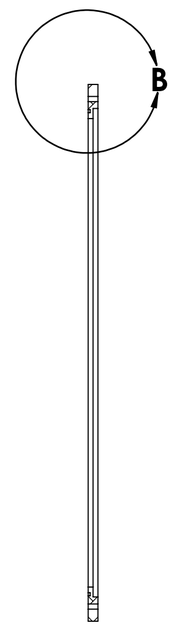

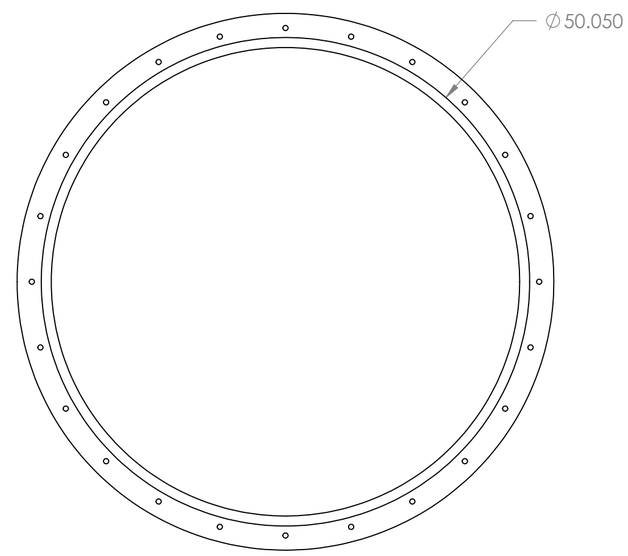

SECTION A-A

NOTES:

1) REMOVE BURRS AND BREAK ALL SHARP CORNERS R0.03 INCHES MAX OR CHAMFER.

2) ALL PARTS MUST BE CLEANED AND DEGREASED.

WEIGHT IN POUNDS.

46.05

THIRD ANGLE PROJECTION

MATERIAL: 6061-T6 (SS)

SHOP NOTES: - DO NOT SCALE DRAWING. - BREAK ALL SHARP EDGES.

SURFACE FINISH: √ MAXIMUM, ALL MACHINED SURFACES

APPROVALS:		DATE:
ORIGINATOR:	J. KELSEY	11/27/2014
DRAWN BY:	C. VIDAL	11/27/2014
CHECKED BY:	J. KELSEY	11/27/2014
APPROVED BY:	J. KELSEY	11/27/2014

UNLESS OTHERWISE SPECIFIED, DIMENSIONS ARE IN INCHES.
TOLERANCES ARE:

FRACTIONS:	DECIMALS:	ANGLES:
±1/32	.XX ±.010 .XXX ±.005	±1°

NEXT ASSEMBLY: Moller Hybrid Vacuum Chamber Weldment

SolidWorks GENERATED DRAWING. FILE LOCATION AND NAME: -

MASSACHUSETTS INSTITUTE OF TECHNOLOGY
LABORATORY FOR NUCLEAR SCIENCE
BATES LINEAR ACCELERATOR CENTER

Moller Hybrid Vacuum Chamber DS Endcap port weldment flange

SCALE:	PROJECT #:	SIZE:	DRAWING #:	SHEET #:	REV:
1:12	Hybrid Coil Vacuum Chamber	C		1 OF 1	E