REVISIONS				
ZONE	REV.	DESCRIPTION	DATE	APPROVED
	A	RELEASE FOR QUOTE	11/13/2014	J. KELSEY
	B	RELEASE FOR MANUFACTURE	11/13/2014	J. KELSEY

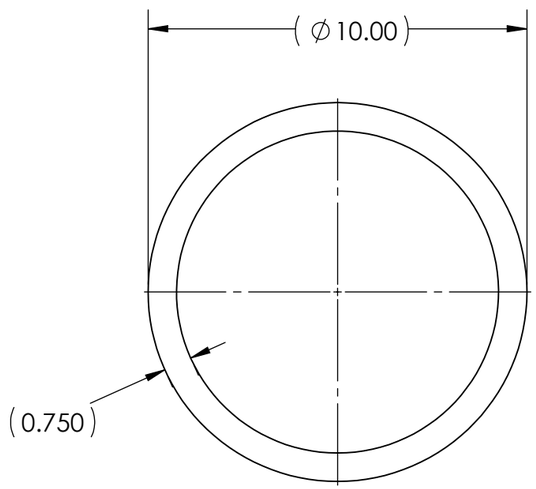

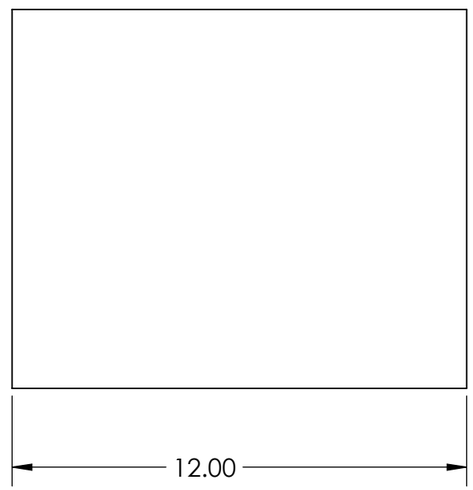

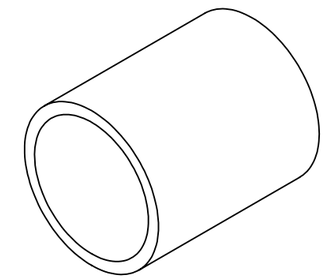

QTY. 4 REQUIRED

NOTES:

1) REMOVE BURRS AND BREAK ALL SHARP CORNERS R0.03 INCHES MAX OR CHAMFER.

2) ALL PARTS MUST BE CLEANED AND DEGREASED.

WEIGHT IN POUNDS.

25.51

THIRD ANGLE PROJECTION

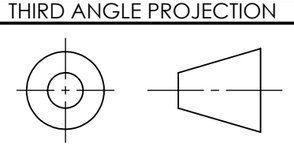

MATERIAL:
6051-T6 ALUMINUM TUBE
10.00 OD X 0.75 WALL

SHOP NOTES: - DO NOT SCALE DRAWING. - BREAK ALL SHARP EDGES.

SURFACE FINISH: √ MAXIMUM, ALL MACHINED SURFACES

APPROVALS:		DATE:
ORIGINATOR:	J. KELSEY	12/29/1799
DRAWN BY:	C. VIDAL	12/29/1799
CHECKED BY:	J. KELSEY	12/29/1799
APPROVED BY:	J. KELSEY	12/29/1799

UNLESS OTHERWISE SPECIFIED, DIMENSIONS ARE IN INCHES.
TOLERANCES ARE:

FRACTIONS:	DECIMALS:	ANGLES:
±1/32	.XX ±.010 .XXX ±.005	±1°

MASSACHUSETTS INSTITUTE OF TECHNOLOGY
LABORATORY FOR NUCLEAR SCIENCE
BATES LINEAR ACCELERATOR CENTER

Moller Hybrid Vacuum Chamber Services Tube

NEXT ASSEMBLY:
Moller Hybrid Vacuum Chamber Top Plate Weldment

SolidWorks GENERATED DRAWING.
FILE LOCATION AND NAME:
-

SCALE:	PROJECT #:	SIZE:	DRAWING #:	SHEET #:	REV:
1:4	J-LAB MOLLER	B	-	1 OF 1	D