SFB 1044
THE LOW-ENERGY FRONTIER OF THE STANDARD MODEL

PRISMA

The MESA Project

Mainz **E**nergy recovering **S**uperconducting **A**ccelerator:
A small superconducting accelerator for particle and nuclear physics

Kurt Aulenbacher
for the MESA-Project-team

JOHANNES GUTENBERG UNIVERSITÄT MAINZ

MAINZER MIKROTRON

Contents

- Project objectives
- MESA R&D issues: SRF
- R&D issues: Beamdynamics & Lattice
- Outlook

MESA: Real estate conditions

- No new buildings
- MAMI continues separately for hadron structure exp.
- MESA takes over “low energy” experiments <300MeV

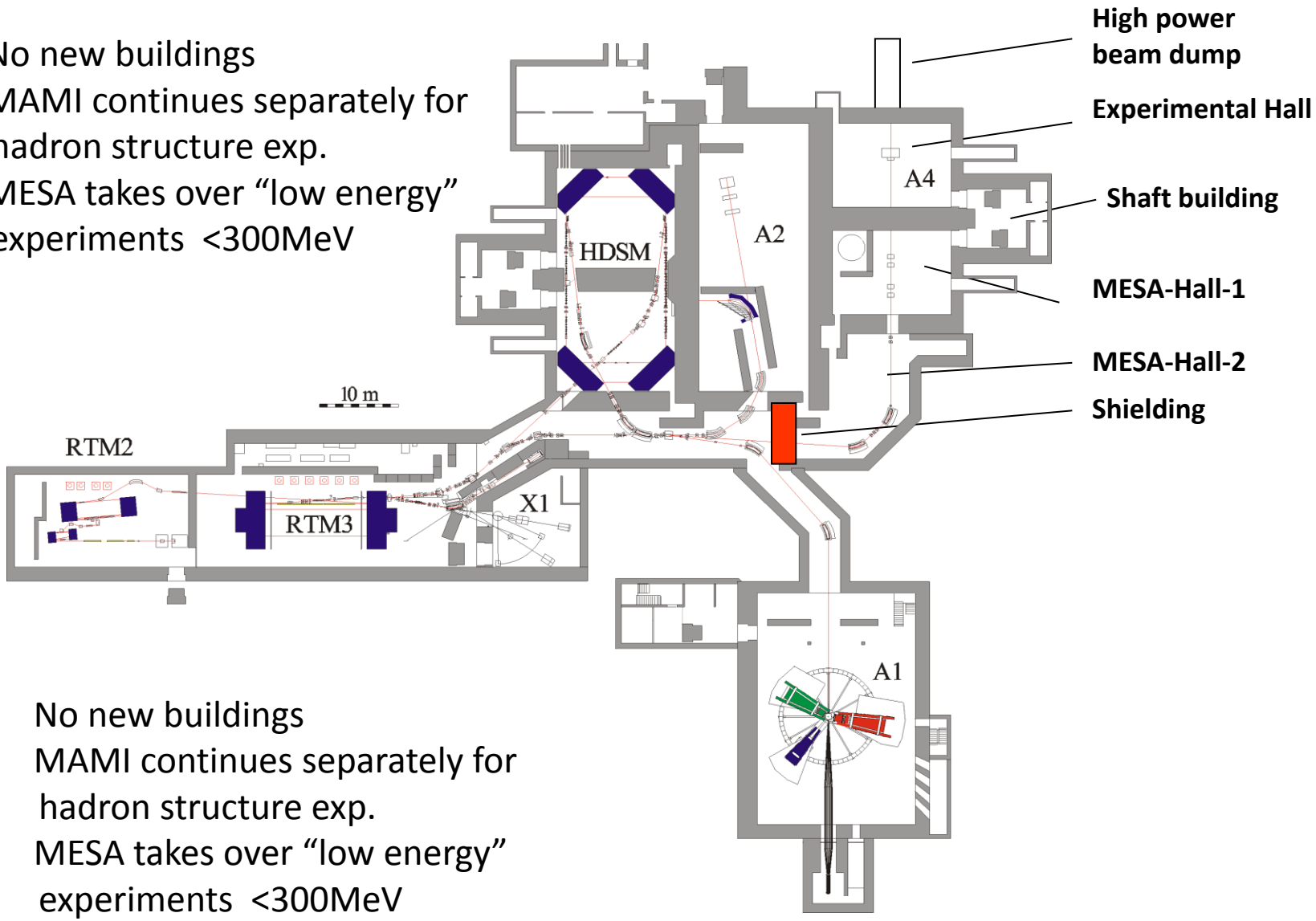

- No new buildings
- MAMI continues separately for hadron structure exp.
- MESA takes over “low energy” experiments <300MeV

MESA: Concept

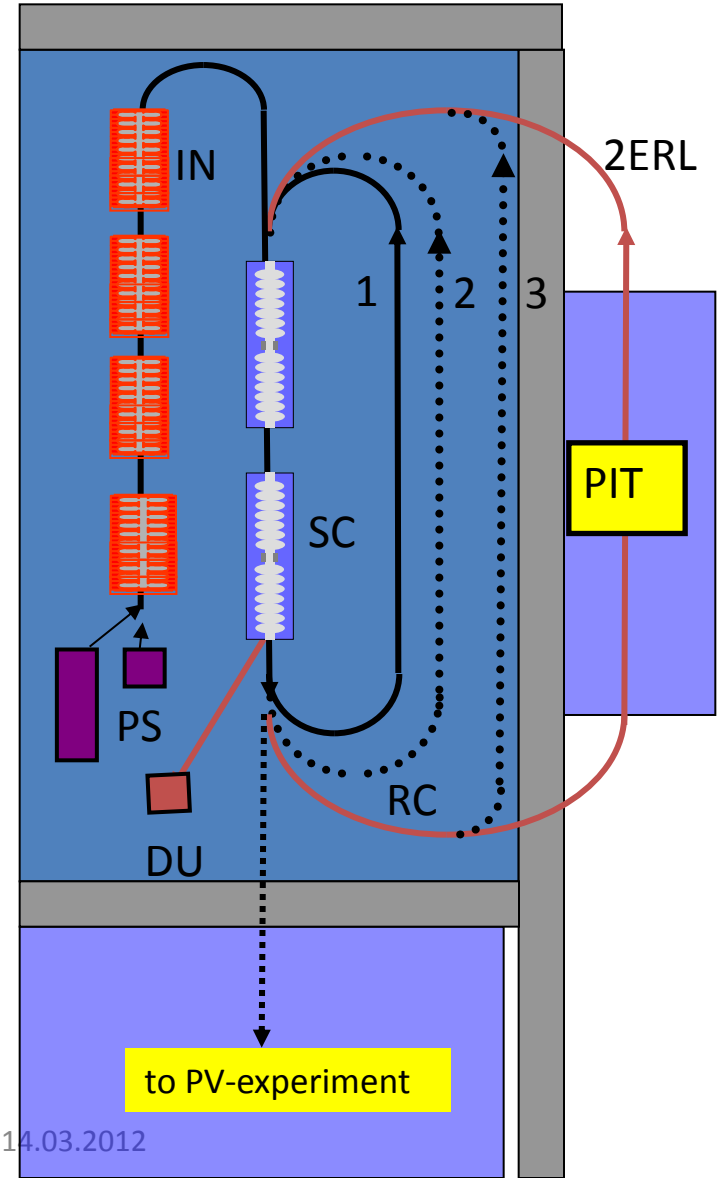

BEAM PARAMETERS:

1.3 GHz c.w.

EB-mode: 150 μA, 200 MeV polarized beam (liquid Hydrogen target L~10^{39})

ERL-mode: 10mA, 100 MeV unpolarized beam (Pseudo-Internal Hydrogen Gas target, PIT L~10^{35})

A possible accelerator layout

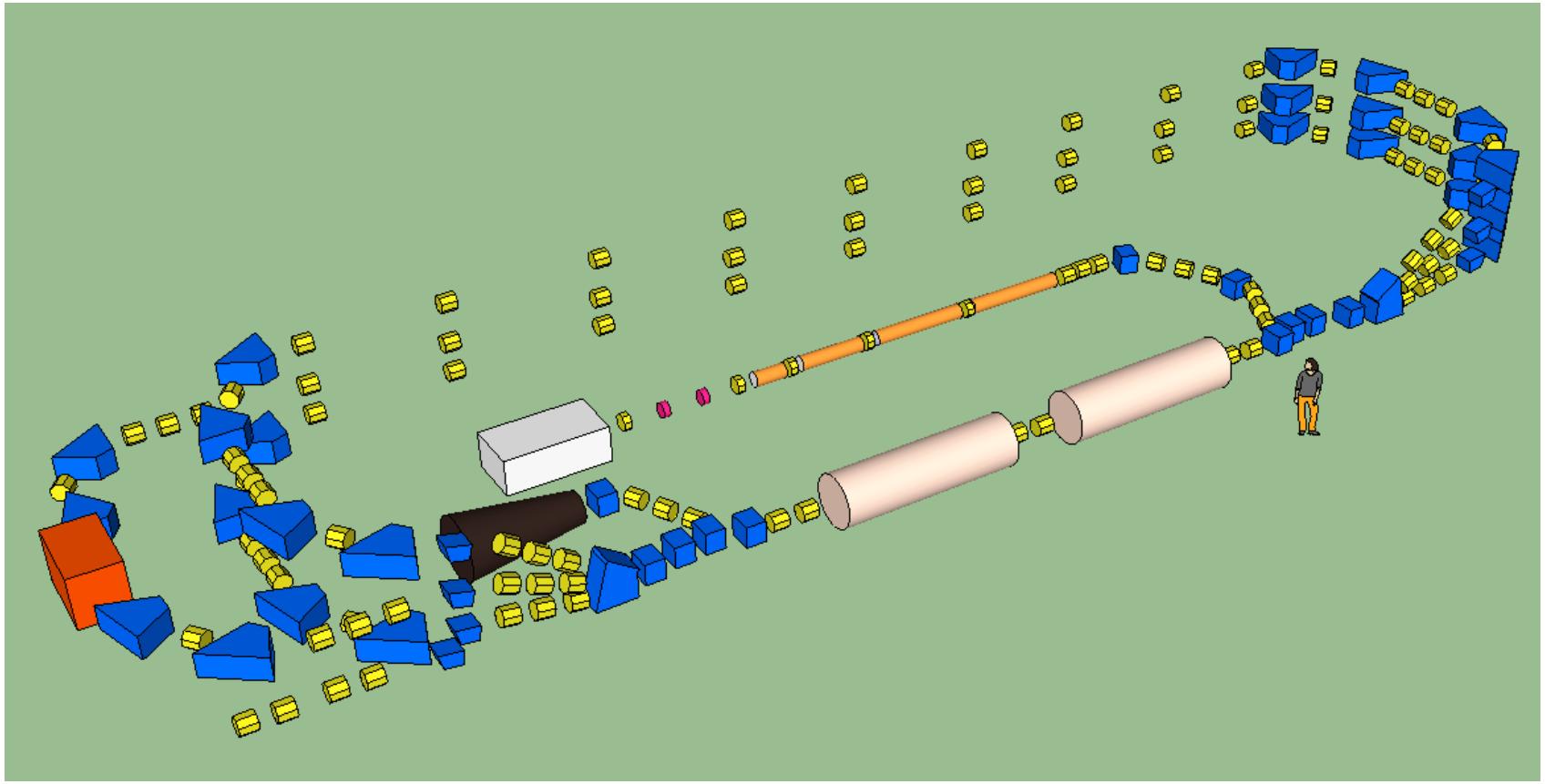

Ralf Eichhorn

Vertical stacking “a la CEBAF” keeps transverse footprint small
→ compatibility with building.

MESA –"Integration"

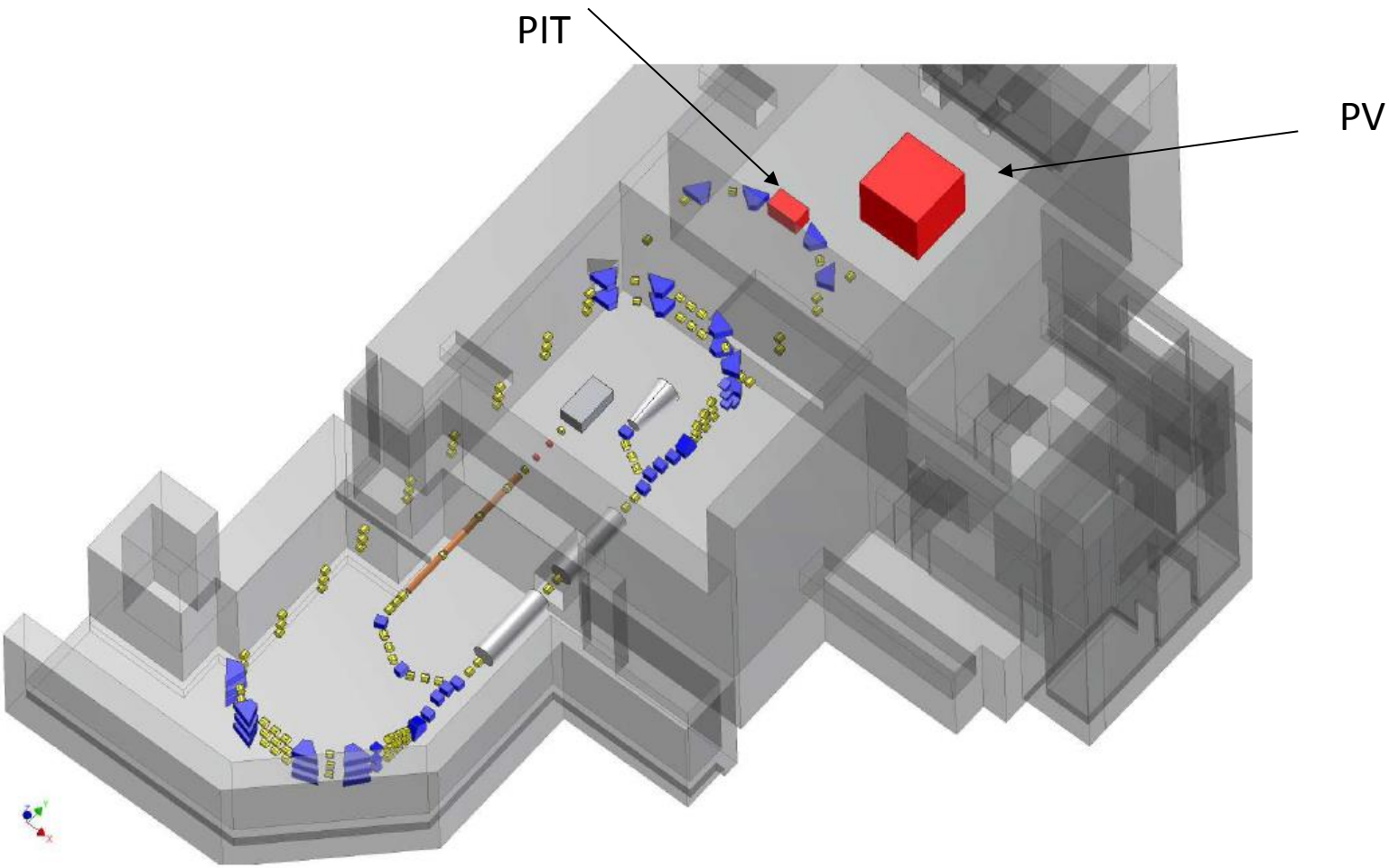

V. Bechthold/R. Heine

EB-Experiment: “P2”

150 µA Beamcurrent , 60cm lq. H2, Beampol: 85%.
10000 h Data-taking (~13-15000 h Runtime)
High accuracy Polarisation measurement ($\Delta P/P$=0.5% !!)
Extremely high demands on control of HC-fluctuations!

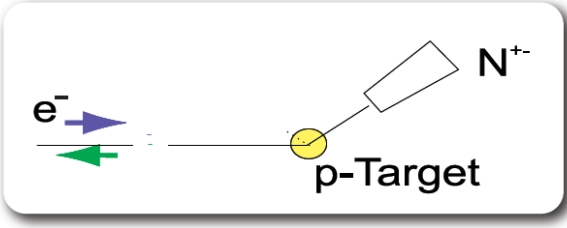

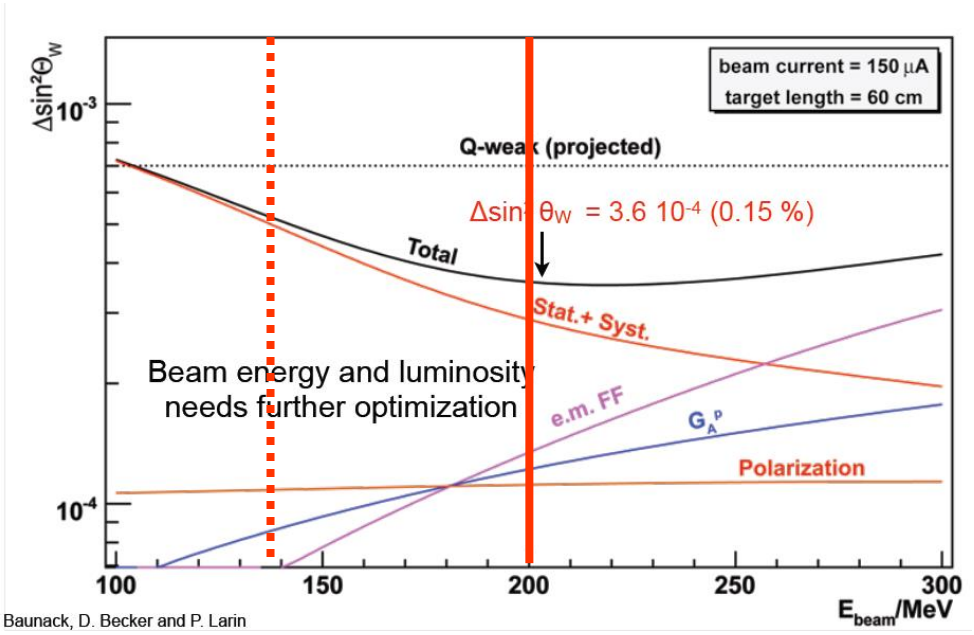

S. Baunack, D. Becker and P. Larin

E_{Beam}	200 MeV
Q^2/θ_e	0.0048 GeV²/20°
Time/current/target	10000h/150µA/60cm
A_{phys}	-20.25 ppb
ΔA_{tot}	0.34 ppb (1.7 %)
ΔA_{stat}	0.25 ppb
ΔA_{sys}	0.19 ppb (0.9%)
Polarization	(85 ± 0.5) %
Rate	0.44 10^{12} Hz
$\Delta\sin^2\theta_{W\ stat}$	2.8 10^{-4}
$\Delta\sin^2\theta_{W\ tot}$	3.6 10^{-4} (0.15 %)

→ **~4000h/Year Runtime**
→ **Accelerator must be optimized for reliability& stability**

→ **PV is MESA-workhorse experiment** ←

MESA-Beamparameters in stages 1 (2)

Beam Energy ERL/EB [MeV]	105/155 (105/205)
Operation mode	1300 MHz, c.w.
Elektron-sources	1.) Polarised : NEA GaAsP/GaAs superlattice , 200keV (?) 2.) unpolarised KCsSb, 200keV
Bunch Charge EB/ERL [pC] 7.7pC=10mA@1300MHz	0.15/0.77 (0.15/7.7)
Norm. Emittance EB/ERL [μm]	0.1/<0.5 (0.1/<1)
Spin Polarisation (EB-mode only)	> 0.85
Recirculations	2 (3)
Beampower at Exp. ERL/EB [kW]	100/22.5 (1050/30)
R.f.-Power installed [kW]	140 (180)

Why stages for MESA?

Accelerator: R&D Issues

Constraints by Budget, Space and Schedule: Technology/Physics solutions must be compatible!

Technology:

- Kryogenics
- Kryomodule

Physics:

- Sources/Injector
- BBU Instability
- Rezirculator (Lattice) Design

Challenge: Cryoplant

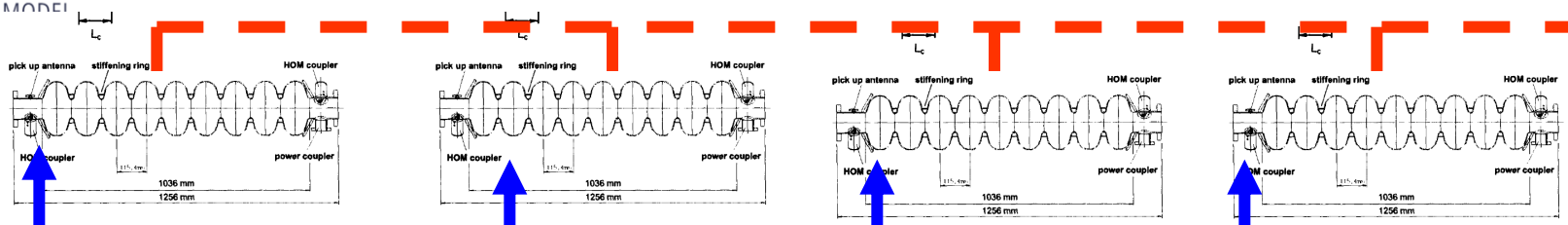

200l /h, lq. Helium

Available Power at 2K 100-150 Watt → ΔE>50MeV from Linac would be optimistic

Injector-Linac (ILAC)

Motivation for normal Conducting -ILAC:

- Easy maintenance
- No cryogenic load,
- Established design (MAMI-ILAC, Th. Weis, H. Euteneuer 1984)

Design: See talk bei Robert Heine tomorrow

- Scaled Version of MAMI-ILAC: 2.5GHz→1,3GHz.
- Phase space shaping by „graded beta“ structure
- 96 KW RF Power (50kW beam loading included)
- T=5MeV, $\Delta\psi_{100\%} < \pm 2.3°$ $\Delta E/E_{\mathrm{rms}}=0.01\%$ length: 11,5 m
- Graded beta + SRF-Modul: („Hybrid“) similar parameters but length 7,5m and 75kW

Spin rotation and source

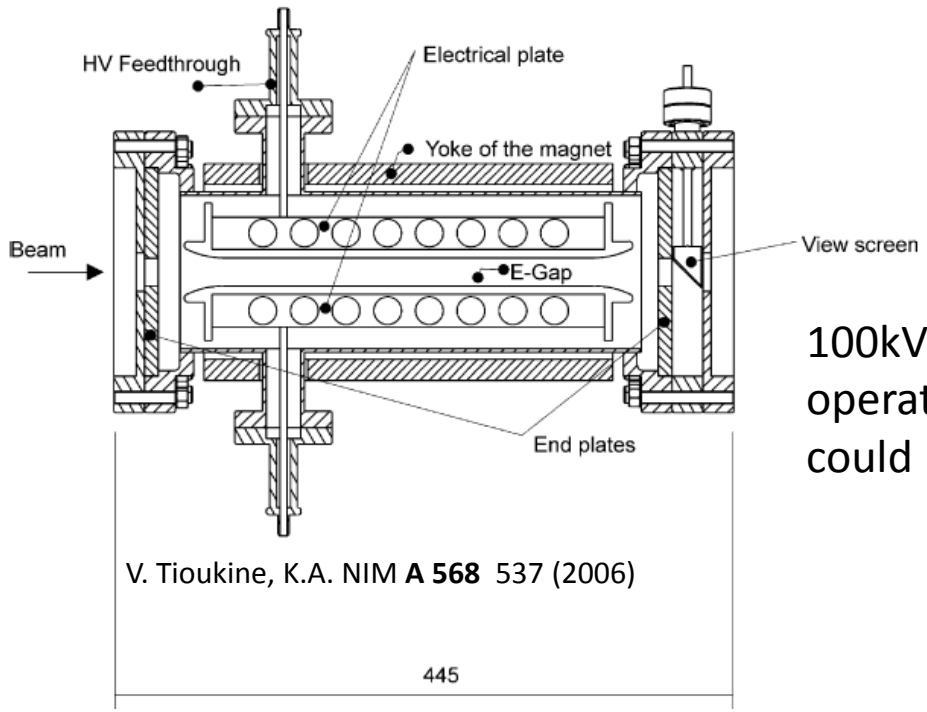

V. Tioukine, K.A. NIM **A 568** 537 (2006)

$$\varphi_{Spin} = \frac{e}{m_e c^2} \frac{1}{\beta^2 \gamma^2} EL$$

100kV ($(\beta\gamma)^2$=0.43) Filter, L=0.3m
operated at 23kV over 2cm gap
could probably work at 200keV ($(\beta\gamma)^2$=0.94)

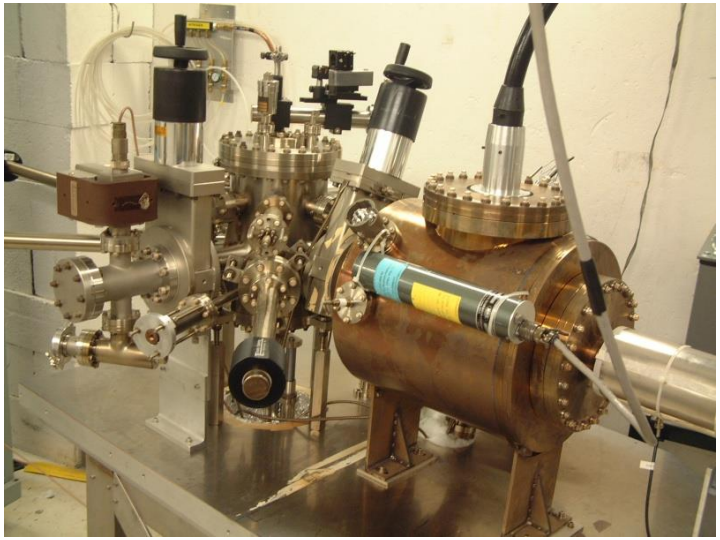

JLAB development:
A 200keV "inverted" source is nowadays very compact - R. Suleiman et al. Proceedings ERL2011. (200keV source probably capable to reach emittance goal at 7.7pC!)

If 200keV too risky for NEA cathode (field emission!) we may operate at, e.g., 150 + 50keV postacceleration

Spin polarized source layout

strongly influenced by need of 'false' asymmetry control! A_{false} <0.2ppb

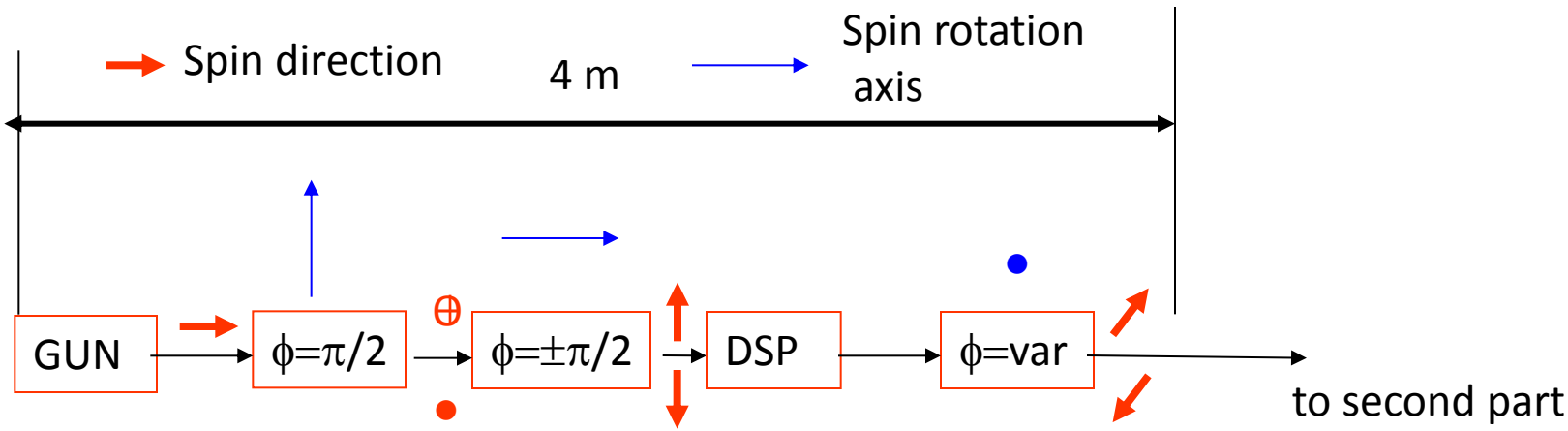

Systematic electron optical helicity reversal! (similar to JLAB/QWEAK)

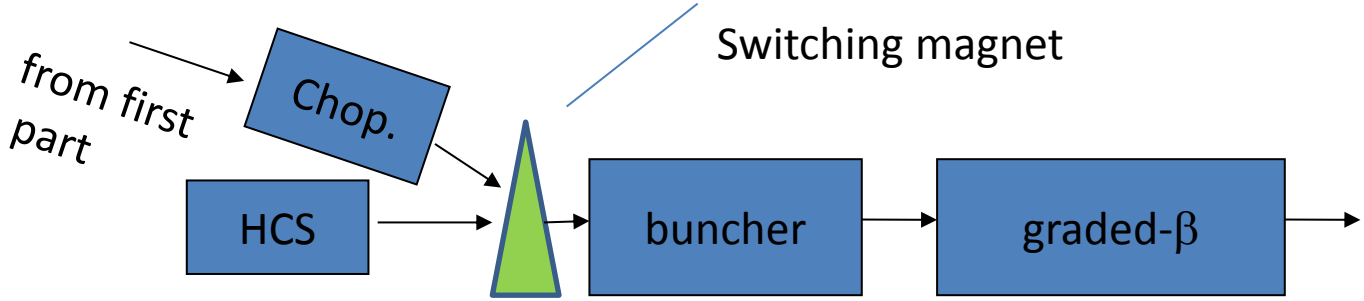

- Polarized Source& Injector overall length ~15m
- 7.7pC operation: Individual High charge source (HCS) with as short connection as possible.
- HCS without chopper ?

Cryomodules and BBU

ELBE
Cryomodule

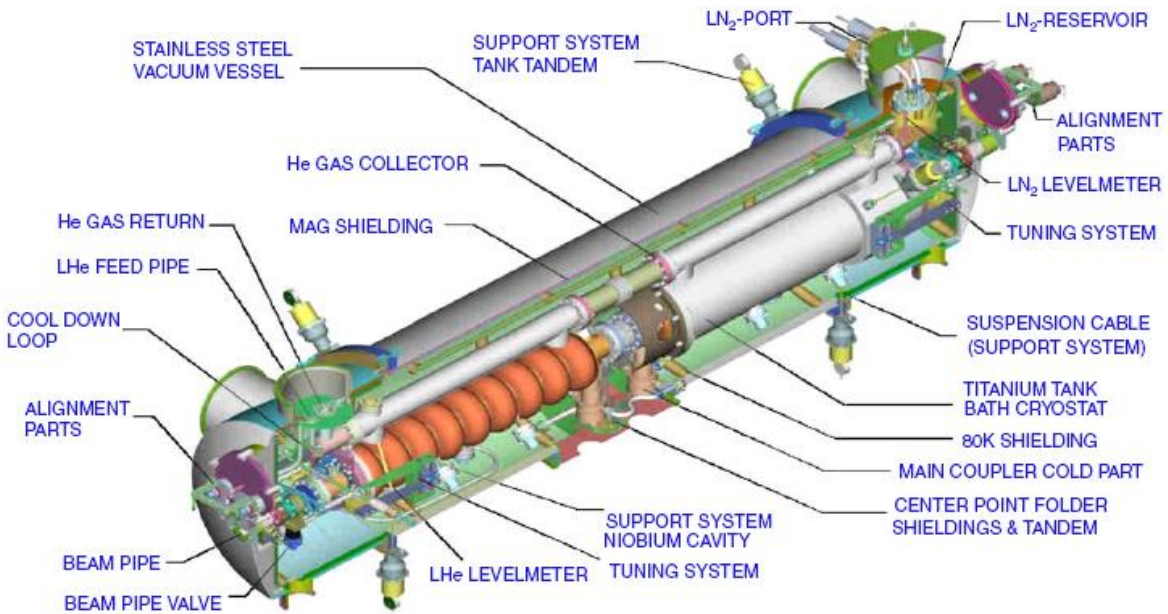

Fig. 1. Three-dimensional drawing of the ELBE cryomodule.

J. Teichert et al. NIMA 557 (2006) 239

- "ELBE" –Modules are suitable for high gradient c.w. operation.
- Commercially available, no additional R&D
- Costs & Delivery time are (to some extent) predictable
- Limitation in Cryopower requires $Q_0=10^{10}$ at 14MeV/m (achieved at DESY/FLASH in operation with TESLA cavity)

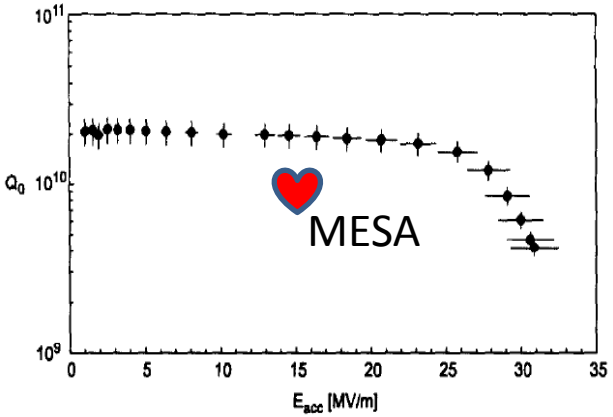

Cryomodules and BBU

9 cell 'TESLA' π-mode Cavity:

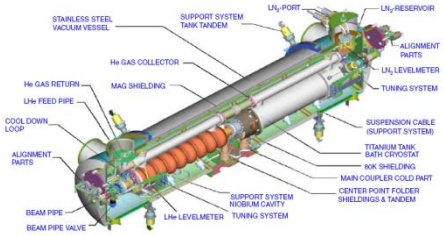

Fig. 1. Three-dimensional drawing of the ELBE cryomodule.

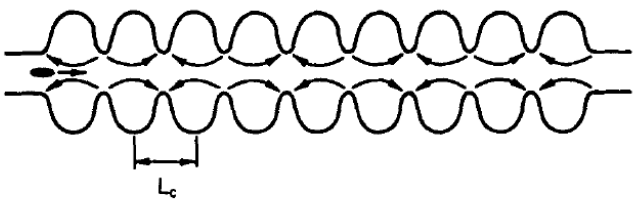

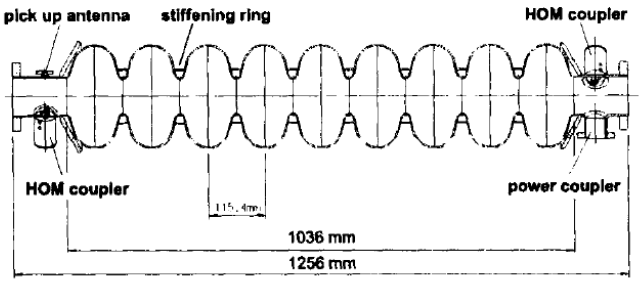

Higher order modes (HOMs) with „bands" of Eigenmodes
e.g. TM11-like. →BBU- Instability for beamcurrent $> I_s$
In recirc. Linacs: Feedback-loop!

$$I_S = -\frac{2c^2}{e\left(R/Q\right)_{HOM} Q_{HOM}\,\omega_{HOM}} \frac{1}{T_{12}\sin(\omega_{HOM} t_r)}$$

(simplified formula!)

General treatment for ERL's
G.H. Hoffstaetter, I. Bazarov: PRSTAB 7 054401 (2004)

T_{12} = Transformation from angle to position

t_r = Recirculation - time

Cryomodules und BBU

$$I_T = -\frac{2c^2}{e\left(R/Q\right)_{HOM} Q_{HOM}\,\omega_{HOM}} \frac{1}{T_{12}\sin(\omega_{HOM} t_r)}$$

$$T_{12} = \text{Horizontal Angle} \Rightarrow \text{Position}$$

$$\mathrm{T}_{34} = \text{Vertical}, \mathrm{T}_{56} = \text{Longitudinal (Energydeviation to phase)}$$

„High current“ – Rezirculators call for :

- Strong HOM damping (TESLA-Cavities are not optimzed!)
- Flexible Recirculation optics to adjust T_{12} , T_{34} but probably also T_{56}

Conclusions:

1. „Non-Tesla Cryomodule“ for MESA → But: compatible with budget & schedule?
2. Second bullet calls for independent orbit recirculation

→ But: Polytronrezirkulator is more compact , inherent stability (at „low“ currents)

Reference-Plan: Use TESLA/Rossendorf Module („Stage-1“: limited current)

We investigate alternative (direct stage-2): Rebuilding/designing optimized cavity & cryomodule (e.g. DICC 1300 MHz, LHeC 801.6MHz). Requires collabarative project with „big science“ (e.g. CERN)

Beam-dynamics: Recirculator-Lattices

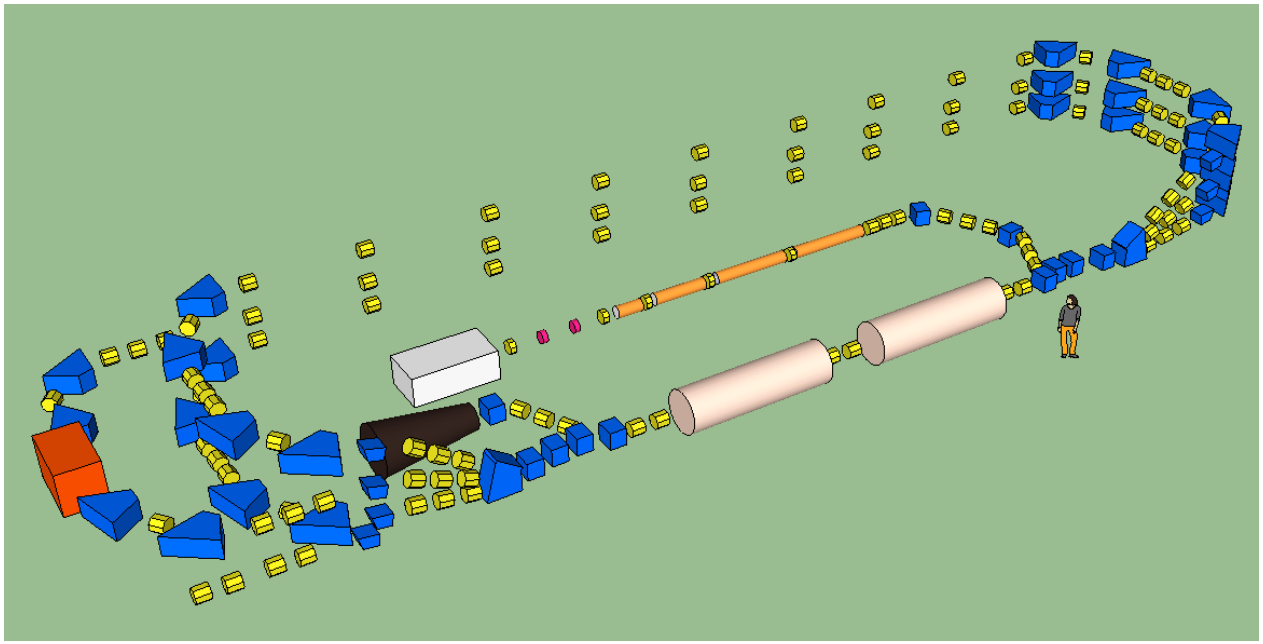

„CEBAF“ inspired

Design: Ralph Eichhorn

Advantage:

- Identical orbits and magnets
- High symmetry

Problem: Vertikal stacking under very constrained long orbit axis

- Large vertical deflection angles
- Small space for compensation quads.

→ Vertical dispersion probably difficult to control

We presently investigate also two types of „flat“ lattices

Horizontal lattices: “Conventional recirculator”

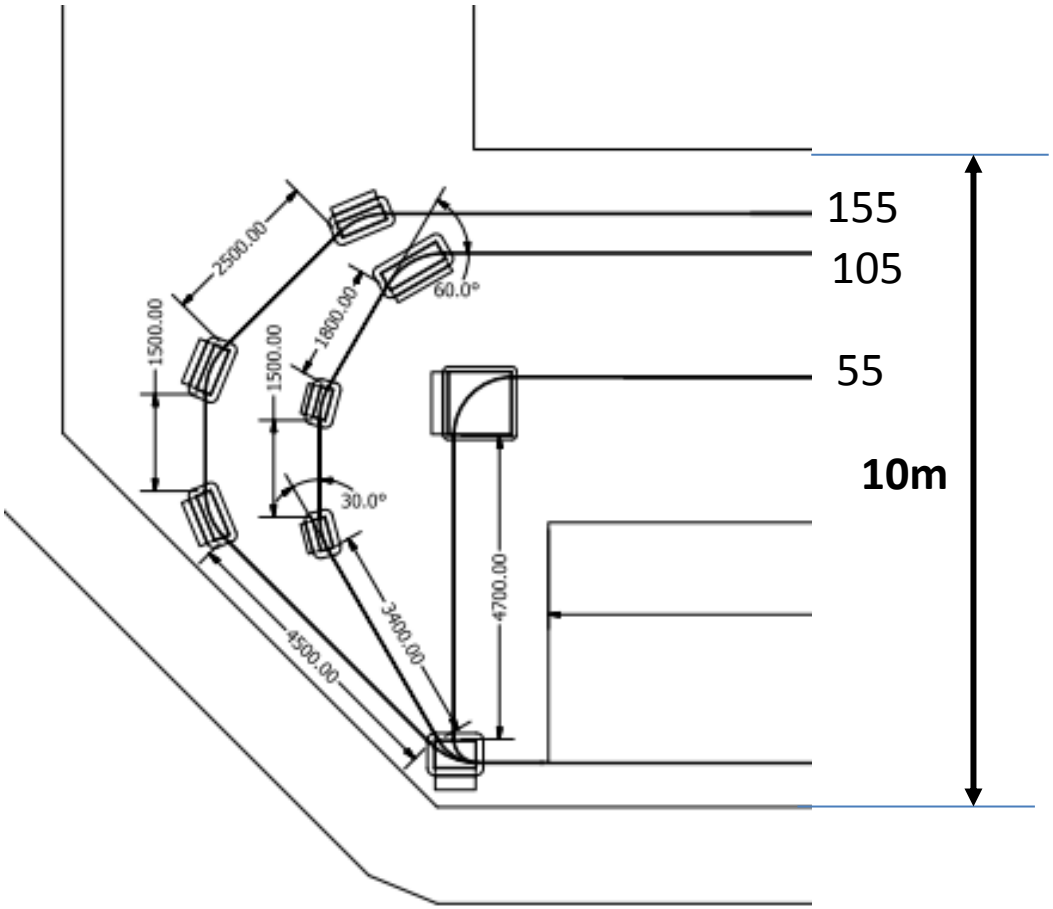

„S-DALINAC“ inspired

Disadvantages:

- diffferent optics for each orbit
- symmetric set-ups difficult
- Large deflection angle in first orbit

Design: Daniel Simon,
Diploma thesis: Scetch of flat lattice with realistic dipole dimensions

Horizontal lattices: Segment Magnet Recirculator

90 degree Segment

„MAMI-C“ inspired

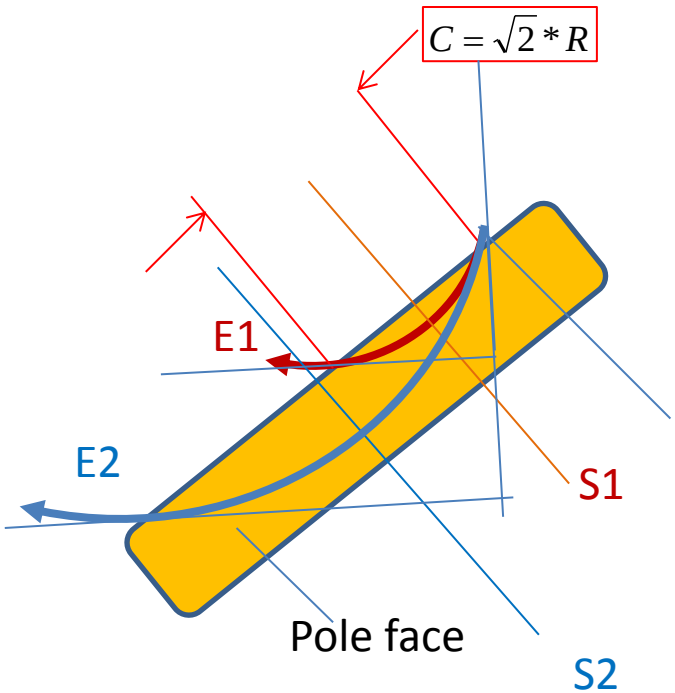

Segment- or „Polytron“- magnet:
Each Orbit enters and exits at **THE SAME** Pole edge
Orbit is **SYMMETRIC** around normal to pole edge:
→ Deflection angle 2*pol face inclination

- Deflection angle is **independent** of energy
- Very convenient transv. Optics (Apart from fringe fields)
- Dispersion **cancels** after each two deflections
- Circular orbits achieved after N*2 Segments
  N=1 Microtron (not suitable for MESA)
  N=2 Double sided Microtron (Two dispersion free sections
  N=3 Hexatron

We investigate an Asymmetric Polytron of second order (AP2)
(Not: „single sided DSM“)

Horizontal lattices: Segment Magnet Recirculator AP2

- Fringe field effect under control (counter field & gradient)
- Phase shift during acceleration under control
- Strong longitudinal focusing (large R56)→ good stability and acceptance
- B- Scaling for two orbit operation (ERL) or higher energy
- Disadvantage: not independent orbits → transv. BBU threshold ?
- Disadvantage large R56 → long. BBU effects ?

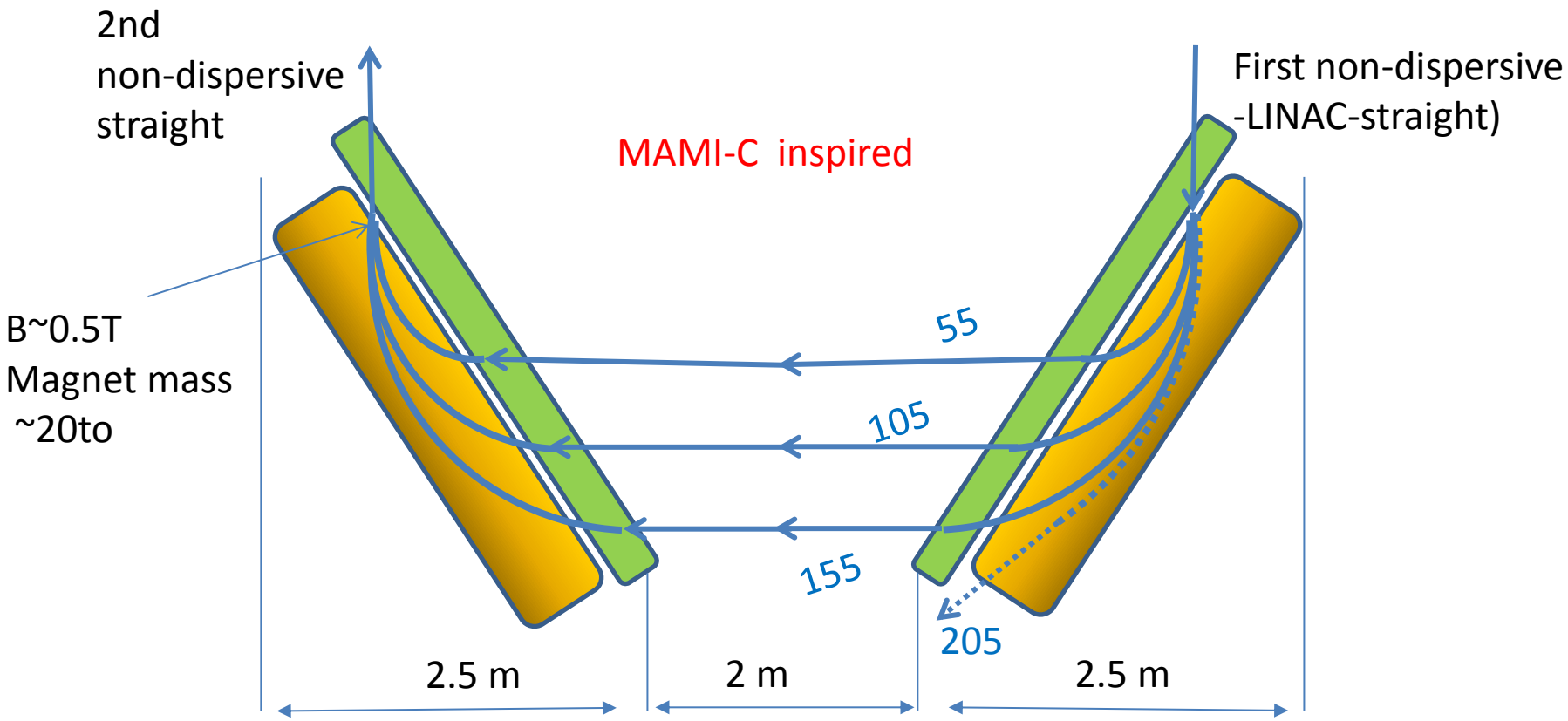

Design: K.H. Kaiser

Outlook

- End 2013 Decision Cryomodule
- Spring 2014 Decision Lattice
- Summer 2014 Infrastructure modifications
- End 2014 Start Injector assembly
- 2015/16 Assembly Lattice, Cryoplant ready.
- End 2016 Delivery Cryomodule
- 2017 Commisioning Cryomodule
- End 2017 MESA commissioning

Acknowledgments

MESA-Project-team:

I. Alexander, K. Aulenbacher, V. Bechthold, Ma.Dehn, Mo.Dehn, F. Fichtner, S. Heidrich, R. Heine, K.H. Kaiser, E. Kirsch, H.J.-Kreidel, Ch. Matejcek, U. Ludwig-Mertin, V.Schmitt, D. Simon

Project team is currently expanding rapidly (SRF, Beam-dynamics,…)!

MESA supported by :

- State of Rhineland Palatinate
- German university excellence initiative:
  PRISMA-Cluster of excellence
- German Science foundation (DFG):
  SFB 1044
- German Ministry of science & ed. (BMBF):
  Joint project: Photocathodes for high brillance beams

Thank you

Suche nach dunklen Photonen an MAMI/MESA

"Bump-hunt" Experimente können (M_A'> 100MeV) sofort begonnen werden: MAMI/A-1 und JLAB/Aspect

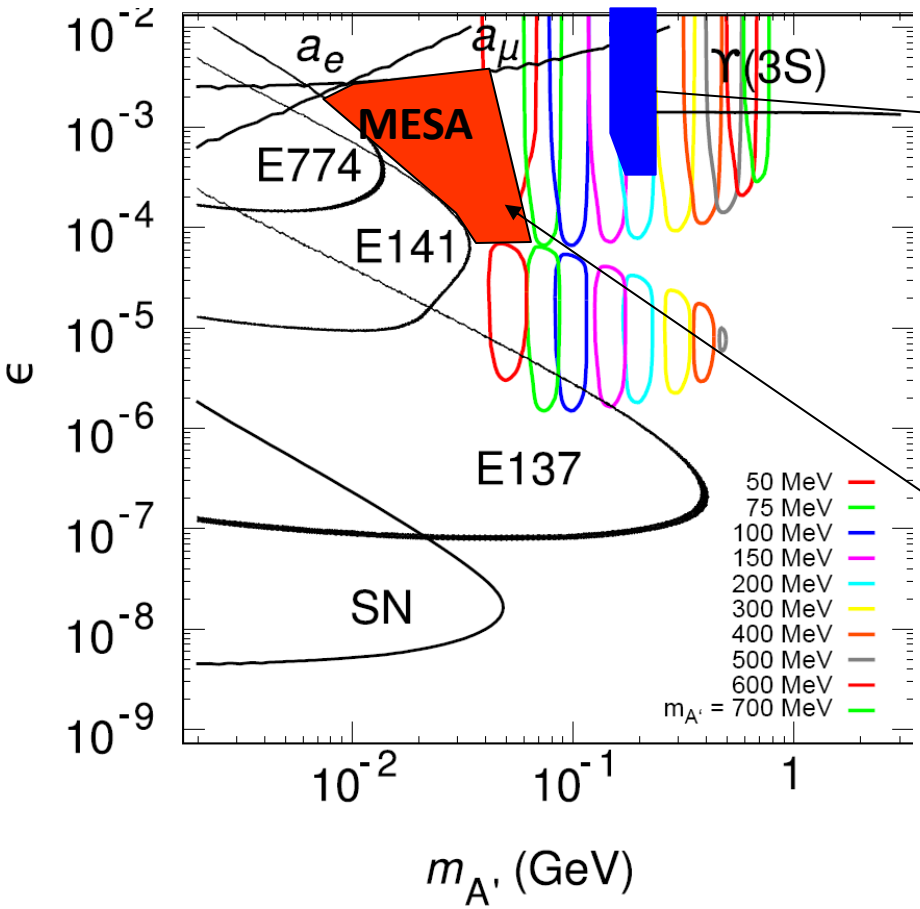

Demonstrationsexperiment an MAMI: 100μA/855MeV auf 0.4% rad. length Tantal (2 Wochen Laufzeit)
(H. Merkel et al. PRL **106** 251802 (2011))

Region interessant wg. $(g-2)_\mu$ Abweichung

ERL/PIT: Ein neues Regime bei E<1GeV

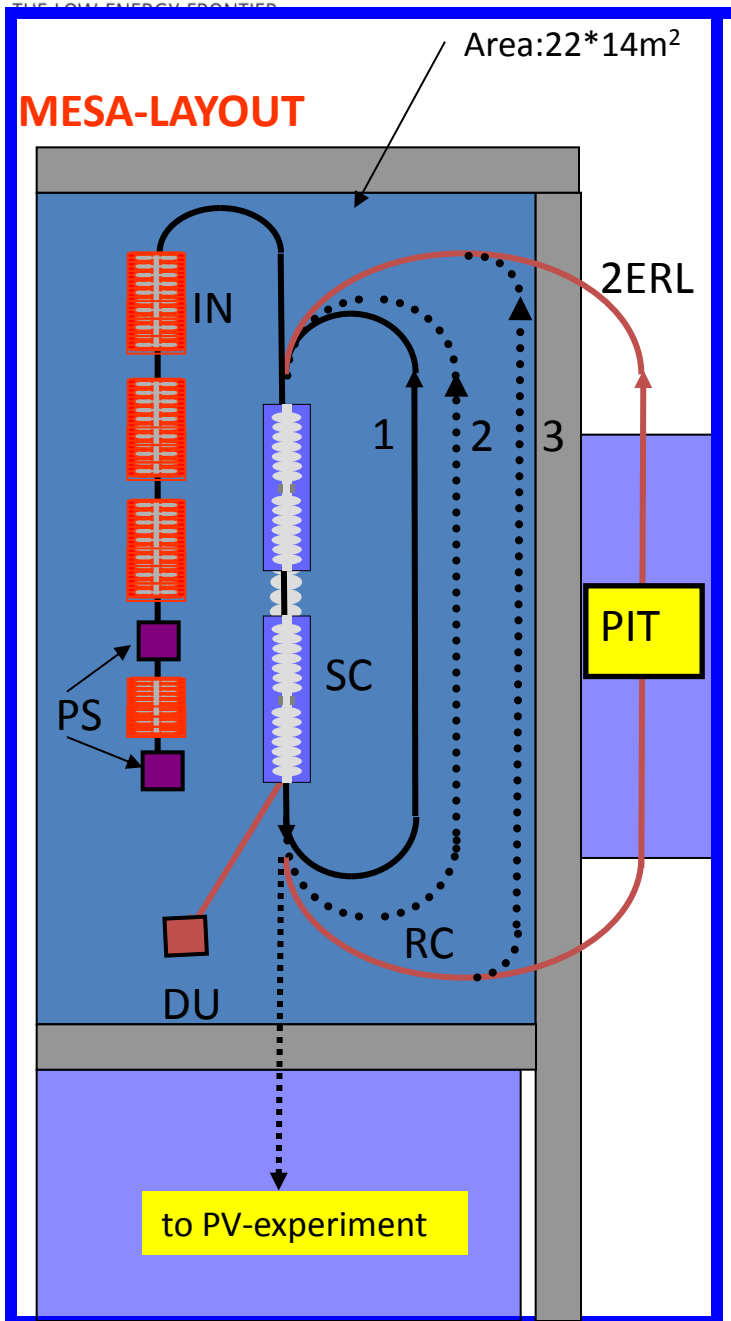

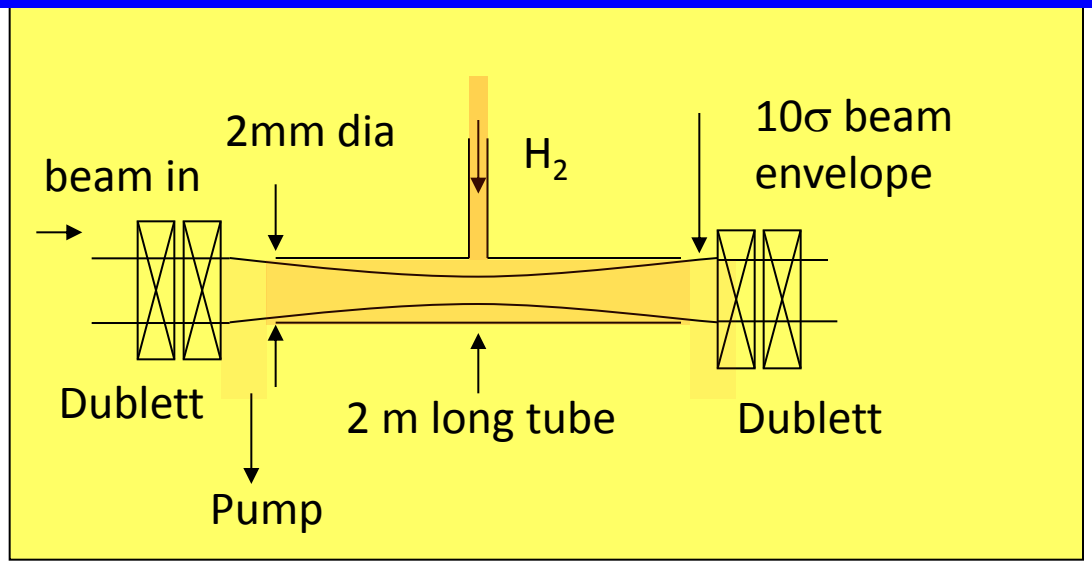

Target dichte N=2*10^{18} atoms/cm^{-2} (3.2 µg/cm^2, 5*10^{-8} X_0)

→ I_0=10^{-2} A: L= 1.2*10^{35}cm^{-2}s^{-1}

→(mittlerer) Enereverlust (Ionisation): ~ 17eV

→ RMS Streuwinkel (Vielfachstreuung): 10µrad

→ Single pass Strahlverschlechterung ist akzeptabel

Bei Bunchladung 7.7pC (10mA): $\varepsilon_{\text{norm}} \approx 1\mu m$

Strahldurchmesser prop. der strahloptischen Funktion β:

$$r^2_{\text{beam}}(z) = \varepsilon_{Geo} * \beta(z)$$

$$\text{mit } \varepsilon_{\text{Geo}} = \frac{\varepsilon_{\text{Norm}}}{\sqrt{\gamma^2 - 1}} \quad \Rightarrow \varepsilon_{\text{Geo}}(100\text{MeV}) \sim 5\text{nm}.$$

In der feldfreien Region um den Punkt $z^* = 0$

$$\beta(z) = \beta(z^*) + \frac{z^2}{\beta(z^*)} = \beta^*(1 + (z/\beta^*)^2) \text{ wähle: } \beta^* = 1m$$

$\Rightarrow$ Maximaler Strahldurchmesser $\leq 0.2\text{mm}$ ($z = \pm 1\text{m}$)