University of Sharjah
College of Engineering
Department of Electrical and Computer Engineering

# DECENTRALIZED NETWORKED CONTROL SYSTEMS: CONTROL AND ESTIMATION OVER LOSSY CHANNELS

by

**Muhammad Ali S. M. Al-Radhawi**

Supervisor

**Professor Maamar Bettayeb**

Program

**Master of Science in Electrical Engineering**

**January 12, 2011**

# DECENTRALIZED NETWORKED CONTROL SYSTEMS: CONTROL AND ESTIMATION OVER LOSSY CHANNELS

by

**Muhammad Ali S. M. Al-Radhawi**

A thesis submitted in partial fulfillment of the requirements for the degree of Master of Science in the Department of Electrical and Computer Engineering, University of Sharjah

**Approved by:**

Maamar Bettayeb ..... Chairman
Professor of Electrical Engineering, University of Sharjah

Abdulla Ismail ..... Member
Professor of Electrical Engineering, United Arab Emirates University

Qassim Nasir ..... Member
Associate Professor of Electrical Engineering, University of Sharjah

January 12, 2011

بسم الله الرحمن الرحيم

(( وَقُل رَّبِّ زِدْنِي عِلْمًا ))

*"O my Lord! increase me in knowledge"*

(Quran XX.114)

(( قُلْ هَلْ يَسْتَوِي ٱلَّذِينَ يَعْلَمُونَ وَٱلَّذِينَ لَا يَعْلَمُونَ ))

*"Are they equal, those who know and those who know not?"*

(Quran XXXIX.9)

# Acknowledgements

First and foremost, the completion of this thesis has been merely by the grace of God, and through Him I have been able to understand and appreciate the real beauty and value of mathematics, and knowledge in general.

I would like to sincerely and deeply thank my advisor, Professor Maamar Bettayeb. His support, and encouragement helped me a lot through the steps of my thesis. I will always appreciate and remember the many hours that we used to spend in his office discussing various research directions. At times he had more faith in me than I, and I hope that my work lived up to some of his expectations.

I thank Prof. Abdulla Ismail for taking the time to serve on my thesis committee. I also thank Dr. Qassim Nasir for serving in the committee, and for years of friendship and help. I am also thankful to the faculty members at the Department, namely, Dr. Karim Abed-Meraim, and Dr. Ahmed Elwakil for their friendship, and collaboration.

I also thank friends whom I have met while pursuing my degrees, namely my officemate Mahmoud Nabag.

Finally, I would like to extend my deepest gratitude and respect to my parents for their support.

# Contents

# List of Figures

# Abstract

Traditionally in control design, one assumes that system measurements are fed back, without latency or faults over infinite bandwidth channels, to a centralized location where processing and actuation take place. However, these two assumptions no longer hold in many modern control systems.

First, the recent technological advances in wireless communication and the decrease in the cost and size of electronics have promoted the use of shared networks for communication between control system components. Control Systems utilizing networks in their loop are called networked control systems (NCSs), which are termed the "Third Generation of Control Systems", in contrast to its predecessors digital and analog control. However, because of network effects such as time delay, packet losses, and coarse quantization, new control problems in NCSs have been researched actively in the last decade.

Second, decentralized control of large-scale systems is having an increasingly important role in real-world problems because of its scalability, robustness and computational efficiency. Applications range from aircraft formations, robotic networks, water transportation networks to power systems, data networks, and process control, to mention just few. However, despite these advantages, decentralized controller design has proven to be a quite challenging and complex task analytically.

The work in the literature is abundant when considering only one of the two problems, however, the combined area of decentralized networked control systems (DNCS) is still in its infancy. In this work, we study control and estimation problems associated with DNCSs. To the best of our knowledge, several problem formulations are addressed for the first time here.

In the DNCS we are considering, we model the network merely as an erasure communication channel following the Gilbert-Elliot model. Packet-losses can result from dropping by the routers due to congestion, dropping by the receiver due to long delay or corrupted content, or dropping by the transmitter due to the inability to access the network. These losses have adversarial effects that might endanger the stability of the system or cause poor performance. Our approach will be to model the overall system as a discrete-time Markovian

jump linear system (DMJLS), and study its stability, control, and estimation.

When looking at the problems decentralized control and estimation of DMJLSs interconnected with norm-bounded interactions, we consider two performance criteria. The first is achieving optimal $\mathscr{H}_\infty$ disturbance attenuation level, and the other is guaranteeing a worst-case average quadratic cost. We consider the three canonical problems: state feedback, dynamic output feedback, and filtering. For all of them, we provide necessary and sufficient for the construction of controllers/estimators, that take the form of linear matrix inequalities (LMI) for the first, and the form of rank-constrained LMIs for the other two. Furthermore, we provide controller/estimator synthesis procedures for local mode-dependent controllers, which are more practical.

In all the cases, we present simulation examples for the application of the developed theorems for a DNCS with packet-losses, comparisons between packet-holding and packet-zeroing are conducted for output feedback, and the effect of the packet-loss probabilities on the performance is investigated.

In a later chapter, we study the stability of a recently proposed overlapping distributed estimation scheme with Markovian packet losses, where LMI conditions are derived for several notions of stability.

Finally, in order to demonstrate the applicability of the results, we apply decentralized state-feedback $\mathscr{H}_\infty$ disturbance attenuation to a dynamic routing problem with switching topology in a data network, a scenario which arises for example in mobile ad-hoc networks (MANETs). The previous results are modified to accommodate arbitrary bounded interconnected delays, where LMI synthesis procedures are provided. A simulation example to illustrate the results is also given.

The control theoretical tools utilized in the thesis include semi-definite programming, Markovian jump systems, the bounded real lemma, $\mathscr{H}_\infty$ control, quadratic stability and the $S$-procedure.

**Keywords:** Decentralized Control, Packet Losses, Networked Control, $\mathscr{H}_\infty$ control, Markovian jump systems, Robust Control.

# Notation

| | |
|---|---|
| $\mathbb{R}^n$ | The normed space of all $n \times 1$ vectors of real numbers |
| $\mathbb{R}^{n\times m}$ | The normed space of all $n \times m$ matrices with real entries |
| $\mathbb{E}$ | The mathematical expectation operator |
| $\Pr(A)$ | Probability of event $A$ |
| $\|z(k)\|^2$ | $\|z(k)\|^2 = z^T(k)z(k)$ |
| $\|z\|_2^2$ | The 2-norm which is defined as $\|z\|_2^2 = \sum_{k=0}^{\infty} \mathbb{E}\|z(k)\|^2$ (see Definition 2.6) |
| $\ell_2(\mathbb{N})$, $\ell_2$ | The Hilbert-space of all mean square-summable sequences (see Definition 2.6) |
| $\mathscr{H}_\infty$ -norm | The supremum of the $\ell_2$ -gain from the disturbance to the regulated variable (see Definition 2.7) |
| $\mathscr{S}, \mathscr{S}_i$ | Large-scale system, $i^{\text{th}}$ subsystem |
| $\bullet$ | The value implied by symmetry in a symmetric matrix entry |
| $A_{ij}$ | $A_{ij} = A_i(\sigma_k)$ when $\sigma_k = j$ |
| $i$ | The subscript $i$ refers to the $i^{\text{th}}$ subsystem |
| $j$ | The subscript $j$ refers to the $j^{\text{th}}$ Markov state |
| $\pi_{j\ell}$ | $\Pr(\sigma_k = j \| \sigma_{k-1} = \ell)$ |
| $\bar{P}_j$ | $\bar{P}_j = \sum_{\ell=1}^{M} \pi_{j\ell} P_\ell$ |
| $\widehat{Q}_j$ | $\widehat{Q}_j = \left(\sum_{\ell=1}^{M} \pi_{j\ell} Q_\ell^{-1}\right)^{-1}$ |
| $\text{diag}[A_1 ... A_n]$ | The matrix with diagonal blocks given by $A_1, .., A_n$, and zero otherwise. |
| $\text{vec}[v_1 ... v_n]$ | The vector obtained by concatenating vectors $v_1, .., v_n$ |
| $I$ | Identity matrix of appropriate dimension |
| $Q > 0, (Q < 0)$ | Matrix $Q$ is positive (negative) definite |
| $Q \geq 0, (Q \leq 0)$ | Matrix $Q$ is positive (negative) semi-definite |
| $\otimes$ | Kronecker's product |
| $Y \succeq 0$ | $Y$ is nonnegative elementwise |

# Acronyms

| | |
|---|---|
| NCS | Networked Control System |
| DNCS | Decentralized Networked Control System |
| DMJLS | Discrete-Time Markovian Jump Linear System |
| i.i.d | Independent Identically Distributed |
| MS | Mean-Square |
| LMI | Linear Matrix Inequality |
| SDP | Semi-Definite Program |
| LTI | Linear Time-Invariant |
| SISO | Single-Input Single-Output |
| TCP | Transmission Control Protocol |
| UDP | User Datagram Protocol |

# 1 Chapter

# Introduction and Relevant Work

## 1.1 Motivation

Centralized control, although possibly optimal, is neither robust nor scalable to complex large-scale dynamical systems with their measurements distributed over large geographical region. There are several reasons for this, first, the computational complexity of employing such centralized controller is very high. Second, the distribution of the sensors over vast geographical region poses a large communication burden which may add long delays and loss of data to the control process. Third, the centralized mechanism is harder to adapt to the changes in the large-scale system. Fourth, the large-scale system can be composed of smaller subsystems with poorly modeled interactions between them and centralized control is not robust to such interactions.

Decentralized Control offers a classical alternative which removes the difficulties caused by centralization. In this approach, the large-scale system is decomposed into $N$ subsystems. This decomposition can be constructed based on the geographical distribution, constraints on the measurements availability, weak coupling between the subsystems, etc... After the system decomposition, a local low-order control is built for each subsystem so that it operates on local measurements. Hence, decentralized control of large-scale systems is having an increasingly important role in real-world problems because of its scalability, robustness and computational efficiency. Applications range from aircraft formations to power systems and communication networks, to mention just few.

In the other hand, the recent technological advances in wireless communication and the decreasing in cost and size of electronics have promoted the appearance of large inexpensive interconnected systems, each with computational and sensing capabilities. Therefore, the systems are distributed with components communicating over networks. However, using

communication networks has its problems which may effect the control process considerably by destabilizing the control or deteriorating the performance. These problems include time delay, packet losses (dropouts), quantization, etc.. The effects of these problems has been an active area of research in the last decade.

In this work, we study a decentralized networked control system (DNCS). The research work in the combined area of DNCS is still in its infancy and several problem formulations are addressed for the first time here.

A recent report on research directions in control theory (Murray et al., 2003) states one of its five recommendations as "substantially increase research aimed at the integration of control, computer science, communications, and networking". Our thesis fits under this direction.

### 1.1.1 Motivating Applications for Decentralized Networked Control Systems

The number of applications of decentralized control is increasing with the advance of communication technologies and computation capabilities.
Examples of applications include:

*Traffic Networks* One of the important problems in traffic networks is the dynamic routing problem with switching topology, with physical constraints of capacities and buffer size (Abdollahi et al., 2010). This is a scenario which arises for example in mobile ad-hoc networks (MANETs). The objective to is stabilize the queue length with some performance measure with respect to an arbitrary admissible exogenous input flows. This problem is decentralized in nature due to the information structure constraints, and switchings in the communication links can be considered as packet-losses.

*Distributed Energy Resources and Microgrids* Smart grids in near future, comprising for instance Flexible AC Transmission Systems FACTS/distributed FACTS and SVCs/STATCOMs for power flow and quality control, coordinated line isolation and fault protection, micro grids for distributed generator (DG) support , will be expected to provide high fidelity power-flow control, self healing, and energy surety and energy security anytime and anywhere. This will require a ubiquitous framework of distributed control-communication supplied by pervasive computation and sensing technologies (Mazumder et al., 2009).

Spatially distributed power electronic systems, which are used in telecommunication, naval, and micro grid power systems are attempting to meet increased demands for reliability,

modularity and reconfigurability. A recent article was published to address these demands by showing wireless control of distributed voltage converters (Mazumder et al., 2005).

*Mobile Control Applications* Formation control problems, such as Unmanned Aerial Vehicles (UAV), is an important problem where decentralization and networked control rises naturally. Instead of treating the formation as one large system with information constraints and constraints on the internal dynamics, the problem is broken down and considered as an interconnected system with overlapping subsystems. for example, Stankovic et al. (2010) consider designed a combined distributed estimator and state feedback control, where we analyze the stability of the former in Chapter 7.

Yang et al. (2008) proposed framework for the design of collective behaviors for groups of identical mobile robots. The approach is based on decentralized simultaneous estimation and control, where each agent communicates with neighbors and estimates the global performance properties of the swarm needed to make a local control decision.

Another application is ocean sampling. Leonard et al. (2007) propose algorithms to determine optimal elliptical trajectories for a fleet of Gliders used to explore the ocean. These algorithms have to contend with very low data rate, asynchronous sampling, and large disturbances (due to the underwater currents) in order to coordinate decentrally their computationally and energy limited gliders.

*Water Transportation Networks* Control of irrigation networks is large-scale problem where DNCS naturally arises. A decentralized control system has been implemented for the flow control of water in irrigation channels which has shown impressive results in performance and water savings (Cantoni et al., 2007). Another emerging application of DNCS is related to combined sewer waste water systems (CSS)(Wan et al., 2008). When a large rainfall occurs the capacity of the CSS can be exceeded and sewage and rainwater are combined, resulting to the discharge of polluted storm water into nearby lakes and rivers which leads to environmental pollution. This is an extremely diverse and challenging problem in which wireless sensing of storm water holding basins, CSS water and sewage levels, and weather forecasting all can provide feedback in order to make decentralized control decisions to prevent such events.

*Other Applications* Consensus in Multi-agent systems (Murray et al., 2007), and the related area of control of complex dynamical networks. (Wang et al., 2003). Control of spatially distributed systems (D'Andrea et al., 2003). Quasi-decentralized control in chemical industry (Sun et al., 2008). Control of smart structures (large arrays of micromechanical and electrical

actuators and sensors) (Oh et al., 2007). Control of extremely large telescopes with adaptive optics and segmented mirrors (MacMartin, 2003). Applications in power systems, examples include automatic generation control (Mahmoud et al., 2009).

Figure 1.1 shows diagrams for some of the applications above.

### 1.1.2 The Gap Between Decentralized and Networked Control Research

The combined area of DNCS is still in its infancy and the current work in DNCS is scattered among the several NCS issues and decentralization schemes as we will see in §1.4.2. This was also mentioned by Bakule (2008). Possible reasons for this are:

- The area of NCS is itself new, most of the work was done after 2000 (Hespanha et al., 2007).
- Most of the research attention was paid to distributed control schemes, because of it has better performance and easier design than decentralized schemes. This research activity in distributed control is also relatively recent (after 2000).
- Decentralized control, and especially optimal control, is difficult since the information structure constraints causes many analytical difficulties such as the existence of control laws and the construction of optimal strategies (Blondel et al., 2000). Consequently, decentralized control laws are conservative in general (Šiljak, 1991), or give characterizations of subproblems only (Rotkowitz et al., 2006).

## 1.2 Networked Control Systems (NCSs)

The recent technological advances in wireless communication and the decreasing in cost and size of electronics have promoted the appearance of large inexpensive interconnected systems, each with computational and sensing capabilities. Therefore, it is common nowadays to implement complex control systems over digital communication networks such as WAN, Ethernet, ControlNet, DeviceNet, Fieldbus, CAN, etc for their advantages (Bushnell, 2001). Advantages include that they are cheap, fast, and easier to distribute over vast geographical areas. This has initiated the change of the means of communication between systems and controllers into networked communications. This urged several researchers to call NCSs the "*Third Generation of Control Systems*" (Graham et al., 2009). However, using communication networks is not free of charge since communication networks have its limitations which

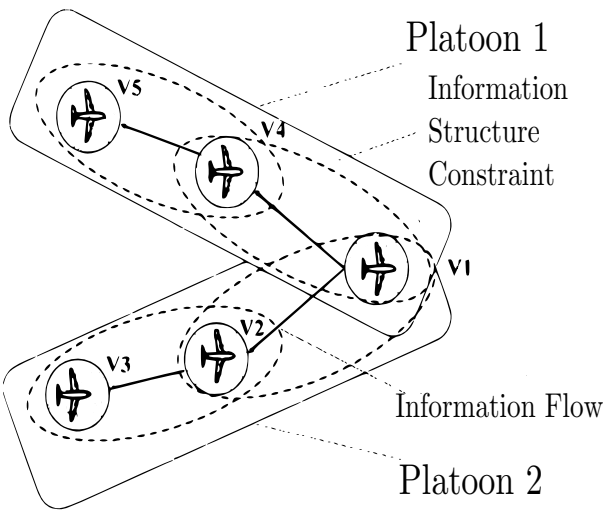


(a) UAVs modeled as overlapping systems.

(b) Robotics Networks.

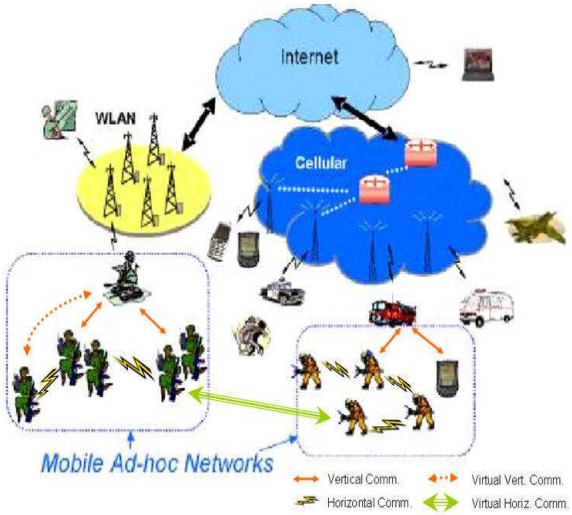


(c) Illustrative diagram for a MANET.

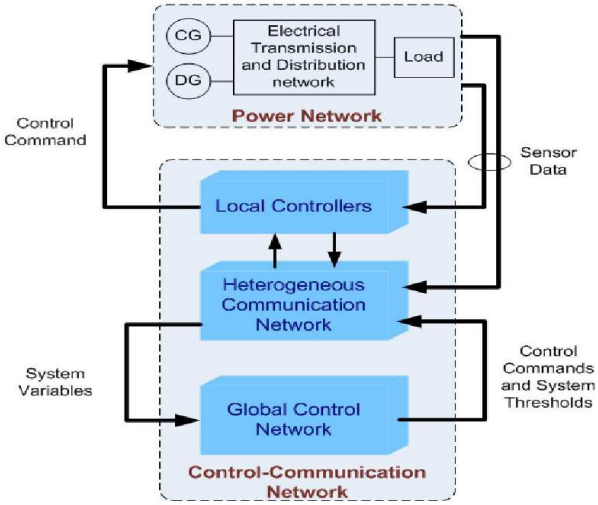


(d) Control for Power Networks (DG: distributed generator, CG: classical generator).

(e) Automated over-shot gates in irrigation networks.

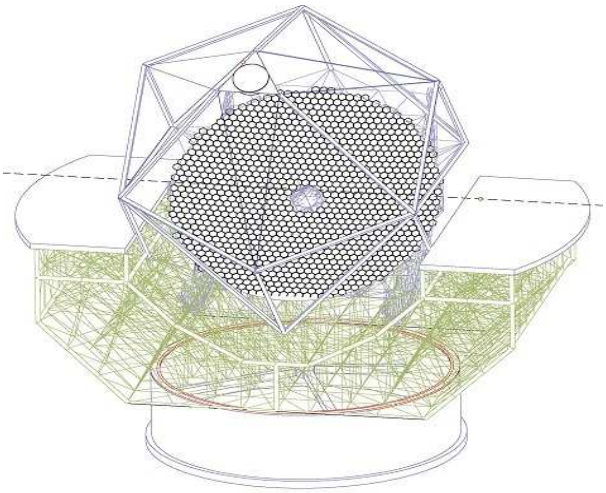

(f) Large Telescope with segmented mirrors.

Figure 1.1: Some applications of DNCSs.

may affect the control considerably. In other words, controller design should take into consideration communication issues. These issues include limited data-rate, delay, packet dropout, fading, etc... This has created new control problems that are being researched actively in the last decade (Antsaklis et al., 2004, 2007).

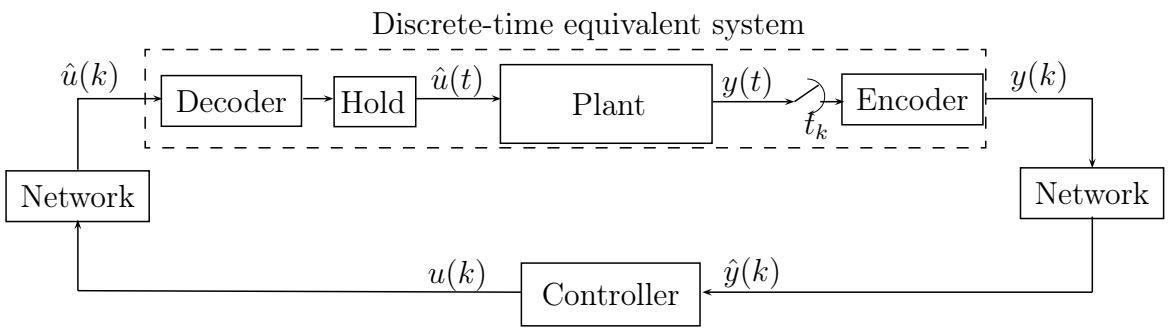


Figure 1.2: A single loop NCS

A typical single loop NCS is depicted in Figure 1.2. The encoder and decoder are also called quantizer and dequantizer, respectively.
Suppose that the plant is described by the pair of equations:

$$\begin{aligned} \dot{x}(t) &= Ax(t) + Bu(t) \\ y(t) &= Cx(t) + Du(t) \end{aligned}$$

The continuous time system with a uniform sampler, a zero-order hold, and negligible quantization effect can be described by a discrete-time equivalent as:

$$\begin{aligned} x(k+1) &= \left(e^{AT}\right) x(k) + \left(\int_0^T e^{At} dt\right) Bu(k) \\ y(k) &= Cx(k) + Du(k) \end{aligned}$$

where $T$ is the sampling period. In the case of non-uniform sampling, a similar discrete-time equivalent system can be derived (Hespanha et al., 2007).

In this work, we will consider discrete-time equivalent systems solely.

### 1.2.1 NCS issues

The problems of control over communication networks that are researched in the literature include the following (Hespanha et al., 2007, Heemels et al., 2010):

*Limited Bit-rate:* The capacity of communication channels in networks is divided between the agents connected to the network. This reflects on the bit-rate allocated to each agent which might be low. This will put strict bounds on the number of quantization level allowed for the encoder. This suggests low communication capacity has a significant negative effect on the attainable control performance. A major result is that there exists a critical positive data rate below which there does not exist any quantization and control scheme able to stabilize an unstable plant, which analogous to the Shannon source coding theorem (Nair et al., 2007, and references therein).

*Time Delay:* Networks cause time-varying/random delays for the transmitted data. This delay is composed usually of transmission delay, queueing delay, propagation delay and negligible computational delay. (Hespanha et al., 2007, Zhang et al., 2001).

*Variable sampling/transmission intervals* Classical digital control systems employ uniform sampling rate, however, this assumption will no longer hold in NCSs where the sampling become time-varying. The notion of maximum allowable transfer interval (MATI) between successive samples is defined in the literature. Several upper bounds on MATI exist to guarantee the stability of the system (Heemels et al., 2010).

*Scheduling:* The problem of scheduling can contribute to the transmission delay. With round-robin (periodic) scheduling and ignoring other delays, the network becomes a periodically time-varying system (Ishii et al., 2002). Other control-oriented protocols are suggested instead of round-robin, e.g try-once-discard (Walsh et al., 2002).

*Fading:* The problem of fading is common in wireless networks. Fading can be modeled as multiplicative noise, which can be modeled as a multiplicative uncertainty and addressed using robust control techniques (Elia, 2005).

*Packet dropouts:* This is the problem which is our main concern. Packet-dropout means the loss of packet in the network. This can occur due to several reasons. First, the packet may be dropped by the routers due to congestion in their queues or to inform the transmitters to reduce their rates. Second, it can be dropped by the receiver due to its late arrival or due to detected errors in it. Third, it may be dropped by the transmitter due to the inability to access the network for a long period. Channels that can be modeled via packet-drops only are termed *erasure channels*.

Networking protocols can be classified according to acknowledgement. If the reception of a

packet acknowledgement was received, the receiver knows whether the packet is lost. This is implemented for example in the Transmission Control Protocol (TCP) protocol. In contrast, the User Datagram Protocol (UDP) protocol does not employ any acknowledgement mechanism.

The most problems of the above are the time-varying delays and packet losses. In this work we are concerned primarily by the problem of packet dropouts (communication losses)[1].

### 1.2.2 Packet Dropout Models

There are several packet dropout models in the literature for discrete-time systems. They can be classified generally into stochastic and deterministic models.
It is worth mentioning that if packet-dropouts are considered for continuous time system with other NCS effects, it can be modeled as prolongation of the delay, prolongation of the sampling interval, or using automata (van Schendel et al., 2010). However, we will not discuss them since they are out of our thesis's scope.

#### The Stochastic model

In this model, packets are dropped according to a certain discrete-time stochastic process. Let the state "1" denotes successful transmission, state "0" denotes packet dropout and let $\theta_k$ denote the state of the $k^{\text{th}}$ packet, then we can define the following stochastic processes:

*Bernoulli:* The Bernoulli model is the simplest stochastic model, so it is widely used in the literature(Sinopoli et al., 2004).
We assume that $\{\theta_k\}_{k=1}^{\infty}$ is an independent identically distributed (i.i.d) Bernoulli process with the following probabilities:

$$\Pr(\theta_k = 0) = p \text{ and } \Pr(\theta_k = 1) = 1 - p.$$

where $p$ is called *the failure rate*. This model is sometimes called a binary erasure model.

*Markov Chain:* The finite-state Markov chain model can be used for modeling correlated packet dropout (Smith et al., 2003, Xiong et al., 2007).

[1]Please note that the terms packet losses, packet drops and packet dropouts will be used interchangeably. Also, lossy links, lossy channels and packet-dropping links will be used interchangeably.

Assume that we have a two-state Markov chain with the following transition probabilities:

$$\Pr(\theta_k = 0|\theta_{k-1} = 1) = p \text{ and } \Pr(\theta_k = 1|\theta_{k-1} = 0) = q$$

where $p$ is called the failure rate and $q$ is called the recovery rate. This model is called the Gilbert-Elliot model. Note that the Bernoulli erasure model can be recovered from the preceding model by setting $p = 1 - q$.

*Poisson:* The Poisson model is used to describe packet drops in continuous time systems (Xu et al., 2005). Consider the Poisson rate $\lambda = 1/T$. The probability that the number of packet losses in the interval $[t, \tau + T)$ equals $k$ is:

$$\Pr(N_{[t,t+\tau)} = k) = \frac{e^{\lambda\tau}(\lambda\tau)^k}{k!}$$

**Deterministic model**

Deterministic models do not assume any stochastic distribution, but use averages or worst case:

*Time averages* Hassibi et al. (1999), Zhang et al. (2001, 2007b) consider packet dropouts occurring at an asymptotic rate defined by the following time average:

$$\eta := \lim_{T\to\infty} \frac{1}{T} \sum_{k=k_0}^{k_0+T-1} (1 - \theta_k), \ \forall k_0 \in \mathbb{N}.$$

This kind of systems is known as *Asynchronous Dynamical Systems* (Hassibi et al., 1999). This kind of systems are hybrid dynamical systems which are systems whose continuous dynamics are governed by a differential or a difference equations and the discrete dynamics are governed by finite automata. In Asynchronous dynamical systems, the finite automata are governed asynchronously by external events that occur at fixed rates.

*Worst case* In this case, packets are allowed to drop arbitrarily, but the number of consecutive packet drops is bounded by an integer $d$ (Yue et al., 2004, Yu et al., 2004, Xiong et al., 2007). The number $d$ is selected usually by the operation engineers based on their prior experience.

### 1.2.3 Overview on Stability and Controller Synthesis over Lossy Links

In this subsection we review some of the basic results for the stability and controller synthesis of discrete-time NCSs with lossy links.

#### Estimation with lossy links

State estimation is an important problem on its own, and also it is crucial for the design certainty-equivalence controllers. Therefore, we overview some of the basic results of state estimation.

Sinopoli et al. (2004) study the performance of the Kalman filter with Bernoulli losses. They study a modified Ricatti $P_{k+1} = A^T P_k A + Q - pA^T P_k C^T (CP_k C^T + R)^{-1} CP_k A$. One of their major results is that their exists a critical packet dropout probability, above which the expected value of the error covariance becomes unbounded. Shi et al. (2010) consider a different performance metric which is the probability that $P_k$ is bounded by a given $M$, and exact expression is derived for this metric.

An analysis in the case of Markovian packet losses was carried out by Huang et al. (2007) and Xiao et al. (2009), and they gave sufficient conditions for the stability of the peak covariance process.

Because of packet losses, the Kalman gain will not converge to a steady-state value and it is dependent on the whole drop out history. Smith et al. (2003) try to avoid this difficulty by computing a fixed set of $2^d$ gains, and the gain is chosen according to the history of the past $d$ packet drop.

In the context of $\mathscr{H}_\infty$ filtering, Wang et al. (2006) study the problem of filtering of time delay system with stochastic losses, sufficient conditions for the solvability of the addressed problem are obtained via linear matrix inequalities (LMIs). Gao et al. (2007) consider $\mathscr{H}_\infty$ filtering with bounded arbitrary losses, delay and quantization, they provide LMI conditions for the existence of estimators. Sahebsara et al. (2008) consider the $\mathscr{H}_\infty$ problem with multiple packet dropouts, where they model the packet-losses stochastically and provide LMI conditions for estimator design.

Liang et al. (2010) consider optimal estimator design with multiple Bernoulli distributed packet dropouts. A linear-minimum-variance filter is proposed.

#### Stability of NCSs with lossy links

Zhang et al. (2001) study the stability of control systems with packet drops modeled as asynchronous dynamical systems with data rate constraints with the approach suggested by

Hassibi et al. (1999) and uses a quadratic Lyapunov function to establish the asymptotic stability of the ADS system. Their results are bilinear in the unknowns, and hence cumbersome computationally.

Seiler et al. (2001) consider a Bernoulli packet dropout model, and they use the theory of Markovian jump system to provide the conditions of stability.

Elia (2005) models NCSs with linear time-invariant (LTI) plants and controllers as deterministic discrete-time systems connected to zero-mean stochastic structured uncertainty. He provides stability conditions for the stochastically perturbed system.

**Controller Synthesis for NCSs with lossy links**

We mention here the work in mere stabilization, linear-quadratic control, and $\mathscr{H}_\infty$ control:

Yu et al. (2004) used a worst case packet dropout model in the backward channel. They modeled the system as a switching system and provided a stabilizing feedback gain results based on the construction of a common quadratic Laypunov function. Continuing on the same path, Xiong et al. (2007) extended their results by assuming packet dropouts in the forward and backward channel. They also used a packet-loss dependent Lyapunov function instead of a common one. Their stabilization results were for both worst case and Markovian models. Yu et al. (2009) generalized the preceding results to allow switching controllers and output feedback.

In a similar work, Zhang et al. (2007b) studied the problem of stabilization with observer-based output feedback in the presence of packet dropped modeled as Asynchronous dynamical systems and they provided LMI conditions.

Yue et al. (2004) design a state feedback controller for sampled-data control system taking into consideration both time-delays and packet dropouts which are modeled using the worst-case model.

consider controller synthesis for an NCS with time-varying sampling intervals, packet dropouts and time-varying delays. The packet dropouts are modeled using the worst case model. Based on this model, constructive LMI conditions are provided for stabilization.

Elia et al. (2010) designed protocols for networked control systems that guarantee the closed loop mean square stability of a SISO plant with i.i.d packet-losses. They have derived the maximal tolerable drop probability and shown that it is only a function of the unstable eigenvalues of the plant.

You et al. (2010) study the mean-square stabilization with Markovian packet-losses with limited data rate, and provide necessary and sufficient conditions for the problem.

The problem of linear quadratic control was studied extensively. Azimi-Sadjadi (2003)

assumes stochastic dropouts and provides a certainty-equivalence based suboptimal controller and estimator design. Sinopoli et al. (2006) and Imer et al. (2006) extended this approach to obtain optimal controllers when the packets are i.i.d Bernoulli. Gupta et al. (2007) show that the separation theorem holds with a joint design of controller, encoder and decoder. Robinson et al. (2008) optimize the controller location for the LQG problem with packet dropouts. They show that it is optimal to place the controller near the actuator and the separation theorem holds in this case. A result of all these works is that the separation theorem holds with packet acknowledgments. If the controller and that actuator were separated by a network and there is no acknowledgement, then the separation theorem does not hold because of the nonclassical information structure (Witsenhausen, 1968). Gupta et al. (2009a) consider the problem of LQG control with arbitrary network topology subject to erasures, they provide optimal controller design with optimal information processing strategy for each node in the network. Gupta et al. (2009b) consider optimal output feedback with several sensors, they design the maps that specify the processing at the controller and at the sensors to minimize a quadratic cost function.

In terms of $\mathscr{H}_\infty$ control, Seiler et al. (2005) consider designing an $\mathscr{H}_\infty$ output feedback controller with Markovian packet dropouts. Yue et al. (2005) consider the problem of $\mathscr{H}_\infty$ control with both dropouts and delays, packet dropouts are modeled as worst case model. While the previous results consider dropouts in the backward channel only, the work of Wang et al. (2007) studies packet drops in both channels with Bernoulli model. Ishii (2007) studies $\mathscr{H}_\infty$ control with periodic packet scheduling and stochastic packet dropouts modeled as a Bernoulli process, this yields a time-varying but periodic controller.

Quevedo et al. (2008) propose control strategy that exploits large packet frame size of typical modern communication protocols to transmit control sequences which cover multiple data-dropout and delay scenarios with Bernoulli packet dropouts.

## 1.3 Decentralized/Distributed Control

As we indicated before, decentralized control has several advantages over centralized control such as scalability, robustness, and adaptability. In this section we give basic definitions and overview general results.

### 1.3.1 System Decomposition and Decentralization Structures

Decentralized control can be designed either by modeling the system as a whole or as interconnection of subsystems. An interconnection of subsystems is often referred to as a

*large-scale system* or as a *complex system*. If subsystems share some states, we refer to the decomposition as an overlapping decomposition (Šiljak, 1991, Lunze, 1992).

### State Space Representation of Interconnected Systems

Consider a large-scale system $S$ composed of $N$ non-overlapping subsystems $\{S_i\}$. The state-space model of the system can be written in the *i/o-oriented model* or the *interaction-oriented model* (Lunze, 1992). The i/o-representation can be written as:

$$S_i : \begin{array}{rcl} x_i^+ & = & A_i x + B_i u_i + \overbrace{\sum_{i \neq j} A_{ij} x_j}^{(A)} + \overbrace{\sum_{i \neq j} B_{ij} u_j}^{(B)} \\ y_i & = & C_i x_i + \underbrace{\sum_{i \neq j} C_{ij} x_j}_{(C)} \end{array} \tag{1.1}$$

While in the interaction-oriented model, we define interaction signals between the subsystems as:

$$S_i : \left\{ \begin{array}{rcl} x_i^+ & = & A_i x + B_i u_i + E_i v_i \\ y_i & = & C_i x_i + G_i v_i \\ w_i & = & F_i x_i + H_i u_i \end{array} \right. \tag{1.2}$$

and the interaction signals are defined by an interaction matrix:

$$v = Lw$$

The interaction-oriented model can be transformed to an i/o-model if it was well-posed.

### Input/Output Decentralization Structures

We can classify interconnected systems as in (1.1) according to:

- *Decoupled:* If the term $(A)$ is absent in (1.1).
- *Input Decentralized:* If the term $(B)$ is absent in (1.1).
- *Output Decentralized:* If the term $(C)$ is absent in (1.1).

*Controller Structures*

Controllers for large-scale systems can be classified into two main classes:

- *Decentralized Controllers:* This means that the controller ca not exchange information between each others.

- *Distributed Controllers:* This means that controllers can exchange information with each other (Langbort et al., 2004).

Suppose that we have $N$ controllers $\{K_i\}$ such that $K_i$ is responsible for generating the input $u_i$ in (1.1). The role of the outputs $\{y_i\}$ in constructing the input $u_i$ can be described by a bipartite graph between nodes representing the inputs and nodes representing the outputs. The sparsity pattern of the reduced adjacency matrix (or the information flow matrix) of that graph represents the structural constraint on the controller, which can yield two special cases:

- *Block diagonal matrix:* The controller can access only $y_i$ to generate $u_i$. It is called the fully decentralized case.
- *Nearly block diagonal:* The controller can have access to several outputs, this cases is sometimes termed *quasi-decentralized controllers*. Yang et al. (2000)

Another classification is *static* or *dynamic* controllers. A local control is said to be *static* if it can be written as:

$$u_i = K_i y_i$$

A local controller is said to be *dynamic* if it is a dynamic system written as:

$$K_i : \begin{cases} z_i^+ &= F_i z + G_i y_i \\ u_i &= H_i z_i + D_i y_i \end{cases} \tag{1.3}$$

### 1.3.2 Overview on Decentralized Control Methods

Decentralized control has been of great interest in the control literature due to its vast and important applications. However, information structure constraints result in many analytical difficulties such as the existence of control laws and the construction of optimal strategies (Blondel et al., 2000). Consequently, decentralized control results are conservative in general (Šiljak, 1991), or give characterizations of subproblems only (Rotkowitz et al., 2006).

Since the field of decentralized control has an extensive literature, we will focus on the basic results and related recent work.

#### Basic works, and surveys

The notion of *decentralized fixed mode* was first introduced by the seminal paper of Wang et al. (1973) which refers to the modes of the system that ca not be moved by any linear time invariant feedback law. It turns out that static state feedback is not sufficient always

for the simultaneous pole placement and dynamic controllers are needed (Lunze, 1992). A full characterization of decentralized stabilizability of LTI systems was settled down by Gong et al. (1997) for continuous time systems, and Deliu et al. (2010) for discrete-time systems. It was shown that the set of linear periodically time-varying controllers is the correct class to consider.

Several surveys exist, an early survey was by Sandell Jr et al. (1978) and a recent survey by Bakule (2008). There are several books, for example, the books of Šiljak (1991) and Lunze (1992).

### Optimal Decentralized Control

In the traditional theory of optimal control of linear systems with quadratic costs and Gaussian noise, the optimal feedback design is linear. However, this does not hold generally if the information structure is not classical (Witsenhausen, 1968), and some of these problems are intractable (Blondel et al., 2000).
This urged a lot of research for the cases of linear optimality. The recent work of Rotkowitz et al. (2006) studies the convexity of optimal decentralized control of a system, they showed that if the controller structural constraint satisfy a property called quadratic invariance, then the control problem is a convex optimization problem.

### Decentralized $\mathscr{H}_\infty$ Control

Subsequent chapters will consider decentralized $\mathscr{H}_\infty$ control, therefore we review some of the work done in this area. Since the optimal decentralized control has no known solution, A first approach to the decentralized control design is to propose a direct but heuristic resolution of the BMI problem (Zhai et al., 2001) or to searching a different problem formulation, possibly conservative but tractable. For example, Li et al. (2002) show that a decentralized $\mathscr{H}_\infty$ control problem can be (conservatively) converted into a model approximation problem. Scorletti et al. (2001) propose an LMI approach to decentralized $\mathscr{H}_\infty$ control where they design every local controller such that the corresponding closed loop subsystem has a certain input-output (dissipative) property.

Cheng (1997) considers uncertain large-scale systems in which interconnections between subsystems are described by norm-bounded interconnections. He presents sufficient and almost-necessary conditions for the existence of controller stabilizing the system and guaranteeing a given disturbance attenuation level. Ugrinovskii et al. (2000) follow similar approach while modeling the interconnection as well as uncertainties in each subsystem with integral quadratic constraints. In our work, we follow a similar approach to derive our results.

Because of the difficulty is solving the problem explicitly, Ebihara et al. (2010) provides methods to compute lower bound on the achievable $\mathscr{H}_\infty$ performance via $\mathscr{H}_\infty$ controllers.

## 1.4 Decentralized Networked Control Systems (DNCS)

A decentralized networked control system (DNCS) is NCS in which control is carried in decentralized fashion.

### 1.4.1 DNCS Configurations

In a DNCS, communication links can exist in several positions. Figure 1.3 shows three possible positions of the network in a DNCS, also any combination of this is possible. The first configuration is the natural extension of the centralized NCS, and can appear widely in the practice, while configuration (c) is highly common with distributed controllers.

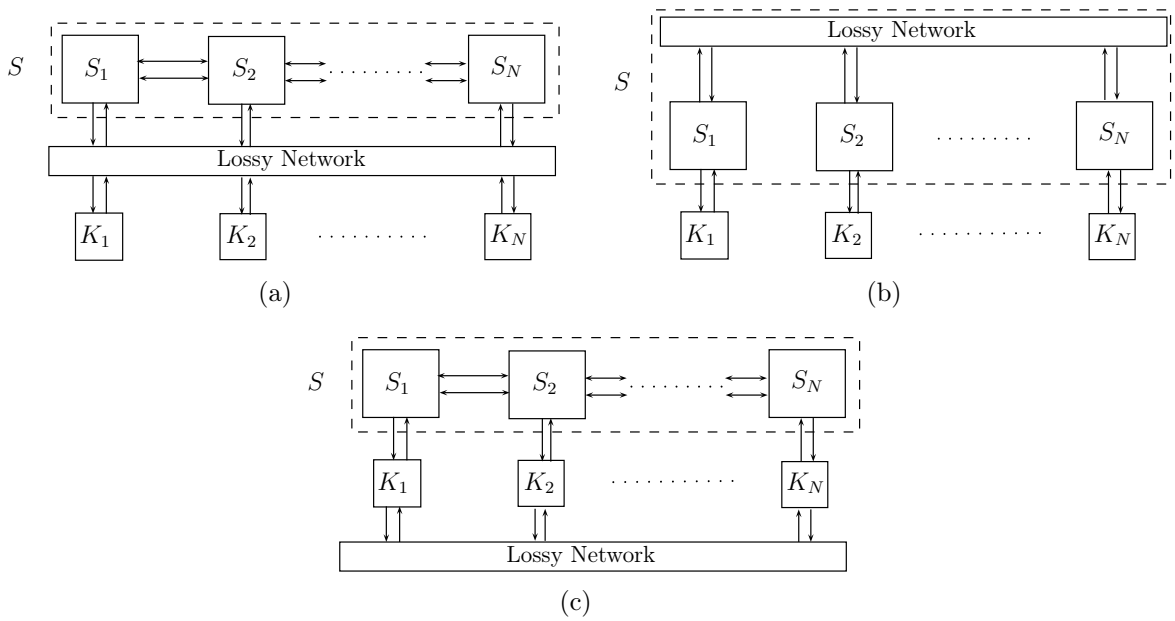


Figure 1.3: Possible positions of the network in the decentralized control system: (a) controllers communicate with the subsystems through a network, (b) The systems interact with each other through a network, (c) controllers exchange information through a network.

### 1.4.2 Previous Studies on DNCS

We review here some of the work done in the area of DNCS.

*DNCS with General Network Effects*

Ishii et al. (2002) consider the case of decentralized stabilization of an undecomposed system, where the local controller can access far measurements through a network. However, measurements are scheduled periodically. The resulting decentralized controllers are periodically time varying.

Matveev et al. (2005) consider the problem of decentralization of an decomposed system over a limited-capacity links. They show that the system is stabilizable if and only if a certain vector characterizing its rate of instability in the open-loop lies in the interior of the rate domain of the network.

Yuksel et al. (2007b,a) study the problem of decentralization stabilization with limited rate constraints. They quantify the rate requirements and obtain optimal signaling, coding and control schemes for decentralized stabilizability.

Zhang et al. (2007a) study the problem of decentralized stabilization with limited bit-rate channels, they find simple structure of the decoder and encoder.

Sun et al. (2008) consider quasi-decentralized control, where a network carries observer estimates between the local controllers. They derive bounds on the maximum allowable update period.

Farhadi et al. (2009) study the problem of decentralized control for a model of microelectromechanical systems (MEMS) devices. The communication is subject to path-loss and slow fading. They use nested $\varepsilon$-decompositions to decompose the system into strongly connected clusters.

Bauer et al. (2010) synthesize decentralized observer-based controllers sing LMIs for large-scale linear plants subject to network communication constraints and varying sampling intervals.

Yadav et al. (2010) propose architectures for distributed controller with sub-controller communication uncertainty.

There is good amount of work on decentralized control with time delays, but since this is not our major concern, we refer the interested reader to some recent works such as Momeni et al. (2009).

### DNCS with Lossy Communication Channels

We review here the work in DNCS with lossy channels

Teo et al. (2003) study the problem of multi-vehicle control with packet losses where an observer-based LQR control is proposed. However, there are no analytical conditions for system stability.

Shi et al. (2005) compare between the performance in the case of decentralized control without and with packet losses. They show that the performance can be impaired as much as 20%.

Following Langbort et al. (2004), Langbort et al. (2005) consider the *distributed* control problem when the controllers have the same interconnection graph as the subsystems. Packet drops occur between the subsystems and also between the controllers. They consider two models of packet dropouts, namely the Bernoulli model and the arbitrary (any time-inhomogeneous Markovian process). Using dissipativity arguments, they design controllers that guarantee an $\mathscr{H}_\infty$ less than 1.

Oh et al. (2006) study the problem of *distributed* estimation of subsystems with switching interaction between them. They study the problem of Kalman filtering and stabilizing communication control using the theory of Markovian jump systems.

Alessio et al. (2008) present a sufficient criterion for analyzing a posteriori the asymptotic stability of the process model in closed-loop with the set of decentralized model predictive controllers (receding horizon controllers) in the presence of packet drop-outs which are modeled by the worst case model.

Jiang et al. (2008) study designing *distributed* controllers for dynamically decoupled systems that share a common objectives. By using Youla-Kucera parameterizations, they showed that the problem can be cast as a convex problem. If there are packet-drops, they provide sufficient conditions for the mean-square stability and optimizing the $\mathcal{H}_2$ performance for Bernoulli model.

Wei (2008) analyzes the stability of a decentralized control system with Bernoulli packet dropouts. He provides sufficient conditions for the mean square stability.

Wang et al. (2009) gives sufficient conditions for $\mathscr{L}_2$-gain finiteness for even-triggered *distributed* control with packet-dropouts.

Stanković et al. (2009) propose a consensus-based *distributed* estimation algorithm, we have provided necessary and sufficient conditions for its stability (Murtadha et al., 2010).

Following the models presented by (Langbort et al., 2004) for *distributed* control, Jin et al. (2009) proposes an adaptive control strategy for compensating packet losses in a distributed control system, while Li et al. (2010) provides stability conditions with random packet-losses via MJLS approach.

Bakule et al. (2010) considers decentralized $\mathscr{H}_\infty$ controller design for symmetric composite continuous-time systems with packet-losses and time-delays, where a sufficient condition is provided for sampled delayed feedback controller.

## 1.5 Problem Formulation and Scope of Work

In this section, we formulate informally the problems that we will be considering in next section. The common features of all the problems are:

1. The large-scale system $\mathscr{S}$ consists of $N$ interconnected discrete-time linear time-invariant systems. The formulation is general enough to capture almost all decentralized control configurations.

2. The formulation can accommodate continuous time systems given that they are sampled uniformly with negligible quantization effects. Hence, we can consider the discrete-time equivalent system as in Figure 1.2.

3. All the system components are time-triggered, and not event triggered. This assumption is justifiable since most actuators, controllers, and sensors are activated based on a time clock in practice.

4. If a packet experiences delay longer than one sampling period, then it is considered to be lost. This assumption is realistic in many networks, since keeping the delayed packets circulating in the network will increase the congestion. Furthermore, incorporating delayed packets in control actions will increase the computational complexity need to implement the controller considerably.

5. The packet-losses are assumed to follow a stochastic Markov chain model, and it exists in both the forward and backward channels[2]. This is very general assumption, since we allow correlated packet-losses, multiple packet-losses, and in both channels.

6. Packet reception acknowledgements are assumed to be available for controllers in the forward channel[3]. For example, TCP protocols satisfy this requirement. The acknowledgment packets does not experience losses. The assumption is not restrictive, since TCP protocols are widely used in practice.

7. The synthesis problems will include the packet-zeroing and packet holding, except for state-feedback where the former can be considered only. Those strategies are well-known in the literature.

[2]The forward channel is the channel from the controller to the subsystems, and backward channel is the channel from the system to the controller.

[3]Note that we require acknowledgements in the forward channel only if it was existent, while they are not needed in the backward channel, for example UDP is sufficient in the backward channel. However, it might be argued that is not possible to have TCP and UDP operating in the same network. The answer is that all-TCP network fits in our framework where the receiver will not use the packet re-sent by the TCP protocol. Furthermore, the general purpose TCP/UDP are not the only used protocols, other control-oriented protocols are available or under development (Graham et al., 2009).

8. The whole system will be modeled as a discrete-time Markovian jump system.

### 1.5.1 Decentralized Control Problems

We will consider state and output feedback problems with $\mathscr{H}_\infty$ and guaranteed cost synthesis. Figure 1.4 shows a block diagram of the problem. The problems are stated informally as follows:

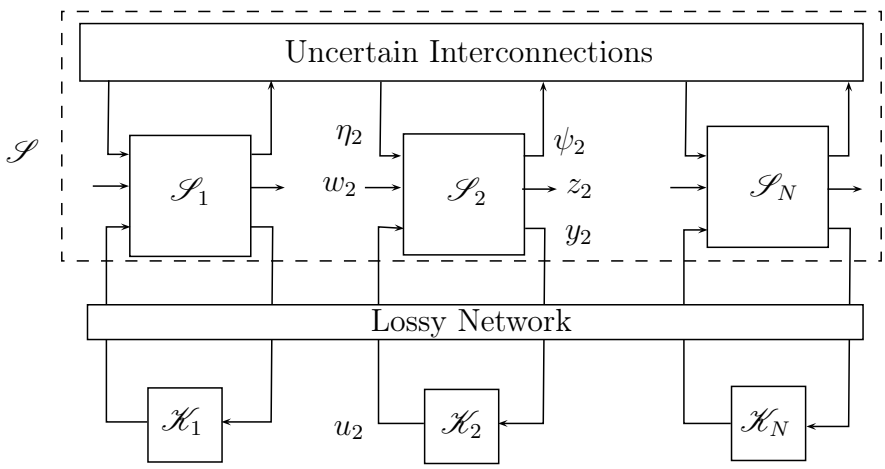


Figure 1.4: Block diagram of the decentralized Networked Control System with disturbance attenuation.

**Problem 1 (*Decentralized $\mathscr{H}_\infty$ State Feedback Synthesis*)** *Given $N$ discrete-time Markovian jump linear systems with norm-bounded uncertain interconnections. Provide procedures for the synthesis of state-feedback controllers stabilizing the system with a given disturbance attenuation level in the following cases:*

1. *The state feedback controller is global-mode dependent with a general Markov chain.*
2. *The state feedback controller is global-mode dependent with a Bernoulli-type Markov chain.*
3. *The state feedback controller is local-mode dependent with a general Markov chain.*
4. *The state feedback controller is local-mode dependent with a Bernoulli-type Markov chain.*

**Problem 2 (*Decentralized $\mathscr{H}_\infty$ Output Feedback Synthesis*)** *Given $N$ discrete-time Markovian jump linear systems with norm-bounded uncertain interconnections. Provide procedures conditions for the synthesis of dynamic output feedback controllers stabilizing the system with a given disturbance attenuation level in the following cases:*

1. *The Output feedback controller is global-mode dependent with a general Markov chain.*
2. *The Output feedback controller is global-mode dependent with a Bernoulli-type Markov chain.*
3. *The Output feedback controller is local-mode dependent with a general Markov chain.*
4. *The Output feedback controller is local-mode dependent with a Bernoulli-type Markov chain.*

**Problem 3 (*Decentralized Guaranteed-Cost State Feedback Synthesis*)** *Given $N$ discrete time Markovian jump linear systems with norm-bounded uncertain interconnections. Provide procedures conditions for the synthesis of state-feedback controllers stabilizing the system with a guaranteed quadratic cost in the following cases:*

1. *The state feedback controller is global-mode dependent with a general Markov chain.*
2. *The state feedback controller is global-mode dependent with a Bernoulli-type Markov chain.*
3. *The state feedback controller is local-mode dependent with a general Markov chain.*
4. *The state feedback controller is local-mode dependent with a Bernoulli-type Markov chain.*

**Problem 4 (*Decentralized Guaranteed-Cost Output Feedback Synthesis*)** *Given $N$ discrete-time Markovian jump linear systems with norm-bounded uncertain interconnections. Provide procedures conditions for the synthesis of dynamic output feedback controllers stabilizing the system with a guaranteed quadratic cost in the following cases:*

1. *The Output feedback controller is global-mode dependent with a general Markov chain.*
2. *The Output feedback controller is global-mode dependent with a Bernoulli-type Markov chain.*
3. *The Output feedback controller is local-mode dependent with a general Markov chain.*
4. *The Output feedback controller is local-mode dependent with a Bernoulli-type Markov chain.*

**Problem 5 (*Decentralized $\mathscr{H}_\infty$ State Feedback with Interconnected Time Delays*)** Given $N$ discrete-time Markovian jump linear systems with delayed uncertain interconnections Provide procedures for the synthesis of state-feedback controllers stabilizing the system with a given disturbance attenuation level.

We will apply the results of Problem 5 of the application of dynamic routing:

**Problem 6 (*Decentralized $\mathscr{H}_\infty$ Dynamic Routing Algorithm*)** *Given a traffic network connected over a directed graph. Design a decentralized control law that drives the queues' lengths in the network to zero for any $\ell_2$ disturbance flow with a given disturbance attenuation level for all bounded interconnected delays.*

### 1.5.2 Decentralized Estimation Problems

We consider here two distinct problems. One of which is the synthesis of decentralized estimator, and the other is for stability analysis of a distributed overlapping estimation. Figure 1.5 shows the block diagram for the first problem, where it is described informally as follows:

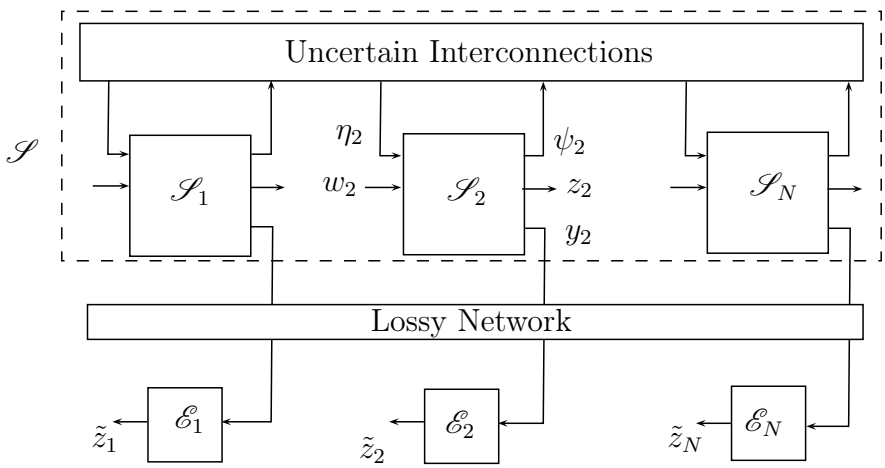


Figure 1.5: Block diagram of the decentralized filtering problem.

**Problem 7 (*Decentralized $\mathscr{H}_\infty$ Estimator Synthesis*)** *Given $N$ discrete-time Markovian jump linear systems with norm-bounded uncertain interconnections. Provide procedures for the synthesis of estimators stabilizing the error system with a given disturbance attenuation level in the following cases:*

1. *The estimator is global-mode dependent with a general Markov chain.*
2. *The estimator is global-mode dependent with a Bernoulli-type Markov chain.*
3. *The estimator is local-mode dependent with a general Markov chain.*
4. *The estimator is local-mode dependent with a Bernoulli-type Markov chain.*

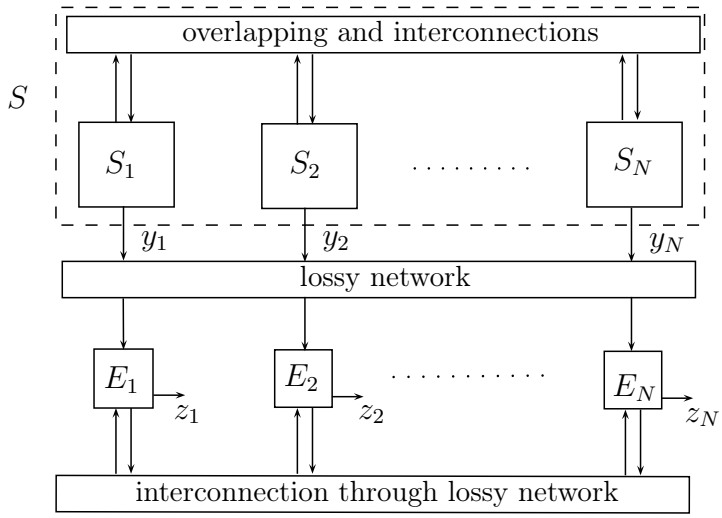


Figure 1.6: Block diagram of the distributed filtering problem.

Figure 1.6 shows the block diagram for the first problem, where it is described informally as follows:

**Problem 8 (*Distributed Overlapping Estimator Stability Analysis*)** Study the stability of scheme presented by Stanković et al. (2009) with Markovian packet-losses.

### 1.5.3 Simulation Tools

The simulations in the thesis were carried out with MATLAB 7.9. LMIs were specified using `CVX` 1.21, a package for specifying and solving convex programs (Grant et al., 2010). `CVX` uses internally solvers such as SeDuMi and SDPT3.

## 1.6 Organization of the Thesis and Summary of Contributions

### 1.6.1 Summary of Contributions

To the best of our knowledge, the following problems were not dealt with in the literature before, and are solved in this work:

1. Solving the problem of $\mathscr{H}_\infty$ state feedback control for discrete-time Markovian jump linear systems with necessary and sufficient LMI conditions.

2. Developing controller synthesis methods for decentralized networked control systems with stochastic packet-losses. This includes all the variations considered: $\mathscr{H}_\infty$ and

guaranteed cost criteria, state and output feedback, packet-zeroing and packet-holding strategies.

3. Developing necessary and sufficient conditions for the decentralized control of discrete-time Markovian jump linear systems with norm-bounded interconnections. This includes all the variations considered: $\mathscr{H}_\infty$ and guaranteed cost criteria, state and output feedback, global and local mode-dependent control, packet-zeroing and packet-holding strategies.

4. Developing synthesis methods for decentralized networked estimators with stochastic packet-losses.

5. Developing necessary and sufficient conditions for the decentralized estimation of Markovian jump linear systems with norm-bounded interconnections.

6. Providing decentralized $\mathscr{H}_\infty$ state feedback controller synthesis procedure for DMJLSs with bounded interconnected time-delays.

7. Applying an $\mathscr{H}_\infty$ discrete-time decentralized dynamic routing for networks with switching topology and bounded interconnected delays.

8. Studying the stability of a distributed overlapping estimation scheme with Markovian packet-losses.

### 1.6.2 Organization of the Thesis

This thesis contains seven chapters, the first of which is this introduction. Chapter 2 contains the theoretical background that will be used throughout the thesis. Chapters 3, 4, 6 form a subpart in the thesis that is dedicated to the problem of decentralized control and one of its applications, while Chapter 5,7 is focused on the complementary problem, namely decentralized and distributed filtering. The conclusions are in Chapter 8. The content of the main chapters is summarized here. The main references where the content of each chapter has been/to be published are reported as well.

- In Chapter 2 we review some basic control theoretical concepts that we are going to utilize in the next chapters such as linear matrix inequalities, Markovian jump systems, bounded real lemma, $\mathscr{H}_\infty$ -control quadratic stability and the $S$-procedure. In §2.5.1, will present necessary and sufficient LMI conditions for the $\mathscr{H}_\infty$ state feedback control of DMJLs, which has not been presented before in the literature, see item (8) in Publications of Author list.

- Chapter 3 is concerned with decentralized state-feedback control with packet-losses. Specifically, Problems 1,3 will be solved, and simulation examples will be presented, see items (6),(7) in Publications of Author list.

- Chapter 4 is concerned with the decentralized output-feedback control with packet-losses. Specifically, Problems 2,4 will be solved, and simulation examples will be presented, see items (1),(2) in Publications of Author list.

- In Chapter 5, we consider the problem of decentralized filtering with packet-losses. Specifically, Problem 7 will be solved, and simulation examples will be presented, see item (3) in Publications of Author list.

- Chapter 6 will consider the application of the ideas considered in Chapter 3 to a dynamic routing problem in a traffic network. Problems 5,6 will be solved, see item (4) in Publications of Author list.

- Chapter 7 is concerned with stability analysis of a distributed overlapping estimator with packet-losses. Problem 8 will be solved, and simulation examples will be presented, see item (5) in Publications of Author list.

- Finally, the conclusion is stated in Chapter 8, and some future directions are mentioned.

# 2 Chapter

# Control Theoretical Background

## 2.1 Introduction

In this chapter, we review basic control theoretical tools that we use in the later chapters of the thesis.

All our results will be in term what is called *Linear Matrix Inequalities*, which are a type of constraints frequently appearing in control problems. We will discuss its definition, problem formulations and related issues.

The packet losses is an NCS are assumed to occur stochastically, and this best captured via Markov chains. Linear systems with Markovian jump parameters are termed *Markovian Jump Linear Systems*. We will state the definition and the basic stability results for this kind of systems.

Am important result in system theory is the *Bounded Real Lemma*, which gives necessary and sufficient conditions for boundedness of the gain from the disturbing input to the regulated output. We state the lemma and some of its extensions since we need it in our consideration of the problem of $\mathscr{H}_\infty$ control, worst-case quadratic cost control, and quadratic stability.

We review the famous $\mathscr{H}_\infty$ control problem for DMJLS. The state feedback problem is solved for the *first time* with necessary and sufficient LMI conditions. The output feedback case is also reviewed.

We will model the interconnection effect in the decentralized control system by a norm-bounded uncertainties. An appropriate stability notions with such uncertainties is called *Quadratic Stability*. Its definition and characterizations will be discussed later in this chapter.

Finally, we include another important tool from control theory which is the *S-Procedure* . It will be used later for the necessity part of our results.

## 2.2 Linear Matrix Inequalities

Linear Matrix Inequalities (LMIs) methodology is a standard way to describe convex constraints in optimization problems. Optimization subject to LMIs is called *semi-definite programming*. LMIs are widely used in control because they appear naturally in many problems. Furthermore, there exist computationally efficient polynomial time algorithms such as interior point methods that can be applied easily to it. Therefore, semi-definite programming problems are always solvable in the sense that it can be determined whether or not the problem feasible, and if it is, a feasible point that minimizes the cost function globally can be computed with a prespecified accuracy. This section is entirely based on Boyd et al. (1994).

**Definition 2.1** A linear matrix inequality is an expression of the form:

$$F(x) = F_0 + \sum_{i=1}^{M} F_i x_i < 0 \tag{2.1}$$

where $[x_1, ..., x_m]^T \in \mathbb{R}^n$ are decision variables, and $\{F_i\} \in \mathbb{R}^{n\times n}$ is a set of symmetric matrices.

### Matrices as variables

LMI problems will not appear with the above form with scaler variables. Instead, we will encounter from now on LMIs with matrix variables. For example, consider the Lyapunov matrix inequality:

$$A^T PA - P < 0, P > 0$$

where $P = P^T \in \mathbb{R}^{n\times n}$ is the matrix variable. If we need to convert it to the form (2.1), then we consider the $x \in \mathbb{R}^{n(n-1)/2}$ as the vector containing matrix $P$ entries. The matrix $P$ can be decomposed as:

$$P = x_1 B_1 + ... + x_{n(n-1)/2} B_{n(n-1)/2}$$

where $\{B_i\}$ is the standard basis of the space of $n \times n$ symmetric matrices.

Generally, an LMI constraint with a matrix variables can be written as:

$$F(P_1, .., P_m) := F_0 + \sum_{i=1}^{m} U_i P_i V_i < 0$$

where $P_1, .., P_m$ are the matrix variables, and $F_0, U_i, V_i$ are given matrices.

### Standard LMI problems

We mention some standard LMI problems that we will use later:

*The LMI Problem* It is the problem of determining wether a certain LMI is feasible or not, and if it is, to find one feasible point. It can be written as:

$$\begin{aligned} \text{Find} \quad & x^* \\ \text{such that} \quad & F(x^*) > 0 \end{aligned} \tag{2.2}$$

*The Eigenvalue Problem* It is the problem of minimizing the maximum eigenvalue of a matrix depending affinely on a variable, or declaring that the problem is not feasible. It can be written as

$$\begin{aligned} \text{minimize} \quad & \lambda \\ \text{subject to} \quad & \lambda I - F(x) > 0, G(x) > 0 \end{aligned} \tag{2.3}$$

where $F(x), G(x)$ are in the form of (2.1).

### LMI relations

We list here some ways that we will use later to convert problems to LMIs or manipulate them.

*System of LMIs* Several LMI constraints can be always casted on into a single LMI. For example, $F_1(x) > 0, F_2(x) > 0$ can be written as:

$$\begin{bmatrix} F_1(x) & 0 \\ 0 & F_2(x) \end{bmatrix} > 0$$

*Congruence Transformation* Consider $F > 0$, then $WFW^T > 0$ with $W$ full rank. Therefore, we can always pre-multiply and post-multiply an LMI by a full rank matrix and its transpose.

*Schur's Complement* The Schur's complement is one of the most common ways for obtaining LMIs. It states that the pair of inequalities:

$$\begin{aligned} Q_1 - Q_2^T Q_3^{-1} Q_2 &> 0 \\ Q_3 &> 0 \end{aligned}$$

is equivalent to:

$$\begin{bmatrix} Q_1 & Q_2^T \\ Q_2 & Q_3 \end{bmatrix} > 0$$

*Change of Variables* It is possible that by defining new variables to linearize some matrix inequalities. For example, consider synthesizing a state feedback control law $u_k = Kx_k$ to stabilize the system $x_{k+1} = Ax_k + Bu_k$. Using the Lyapunov inequality, we can write:

$$(A + BK)^T P(A + BK) - P < 0, P > 0$$

which is a nonlinear inequality in $P, K$. Noting that $P = PP^{-1}P$, we can use Schur's complement to write the matrix inequality as:

$$\begin{bmatrix} P & (A + BK)^T P \\ P(A + BK) & P \end{bmatrix} > 0$$

Define a new variable $Q = P^{-1}$, by multiplying both sides by the congruence transformation diag$[Q\ Q]$, we get:

$$\begin{bmatrix} Q & Q(A + BK)^T \\ (A + BK)Q & Q \end{bmatrix} > 0$$

Finally, we set $Y = KQ$ to get:

$$\begin{bmatrix} Q & QA^T + Y^T B^T \\ AQ + BY & Q \end{bmatrix} > 0$$

which is an LMI in the variables $Q, Y$. We can get our original variables by $P = Q^{-1}, K = YQ^{-1}$.

### 2.2.1 Linear Matrix Inequalities with Rank Constraints

LMIs with rank-constraints are usually involved with robust dynamic output feedback problems, and the problems of reduced order controller design .

**Definition 2.2** A rank constrained LMI feasibility problem is defined as:

$$\begin{aligned} \text{Find} \quad & x \\ \text{such that} \quad & F(x) < 0 \\ & G(x) < 0,\ \text{rank}(G(x)) < r \end{aligned} \tag{2.4}$$

where $F(x), G(x)$ are in the form of (2.1).

These kind of problems are nonconvex and NP hard. However, there exists several algorithms to deal with them such as the alternating LMI method (Grigoriadis et al., 1996), the cone complementarity linearization algorithm (El Ghaoui et al., 1997), the Newton-like method (Orsi et al., 2006), and nuclear-norm minimization algorithm (Recht et al., 2010), to mention just few.

## 2.3 Discrete-Time Markovian Jump Linear Systems (DMJLSs)

Markovian jump systems are a special class of switching systems in which they have their own theory well-developed (Costa et al., 2005). It was called jump systems to reflect the fact that the system matrices "jump" randomly between a countable set of system matrices.

**Definition 2.3 (Ji et al., 1991, Costa et al., 2005)** Consider the system

$$x(k+1) = A_{\theta_k} x(k) + B_{\theta_k} u(k) \tag{2.5}$$

where $x(0), \theta_0$ are given. $\theta_k$ is a discrete-time finite Markov chain taking values on $\mathscr{M} = \{1, .., M\}$ with transition probabilities $\pi_{ij} = \Pr(\theta_k = i | \theta_k = j)$. Such system is called *Markovian jump linear system* (MJLS).

Since the system matrix is switching stochastically, we need a stochastic notion of stability. There are three notions of second-moment stability for a DMJLS:

**Definition 2.4 (Ji et al., 1991)** The system (2.5) with $u(k) \equiv 0$ is:

1. Stochastically Stable, if for every initial state $x(0), \theta_0$

$$\mathbb{E}\left[\sum_{k=1}^{\infty} \|x(k)\|^2 | x(0), \theta_0\right] < \infty.$$

2. Mean Square Stable , if for every initial state $x(0), \theta_0$

$$\lim_{k\to\infty} \mathbb{E}[\|x(k)\|^2 | x(0), \theta_0] = 0.$$

3. Exponentially Mean Square Stable, if for every initial state $x(0), \theta_0$, there exist constants $0 < \alpha < l$ and $\beta > 0$ such that for all $k \geq 0$

$$\mathbb{E}[\|x(k)\|^2 | x(0), \theta_0] \leq \beta \alpha^k \|x(0)\|^2$$

A fundamental result that the three notions are equivalent and they can be tested via a corresponding LMI:

**Theorem 2.1 (Ji et al., 1991)** For the system (2.5) with $u(k) \equiv 0$,

1. the notions of stochastic stability, mean-square stability and exponential mean-square stability are equivalent.

2. second-moment stability holds iff there exist matrices $\{T_i\} > 0$ that satisfy:

$$A_i^T \left( \sum_{j=1}^{N} \pi_{ij} T_j \right) A_i - G_i < 0, \qquad i = 1, .., N$$

The notion of stochastic stabilizability is defined as:

**Definition 2.5** For the system (2.5), the pair $(A_{\theta_k}, B_{\theta_k})$ is said to be stochastically stabilizable if there exists mode-dependent linear state-feedback matrix $K_{\theta_k}$ such that the autonomous system $x(k+1) = (A_{\theta_k} + B_{\theta_k} K_{\theta_k}) x(k)$ is stochastically stable.

## 2.4 The Bounded Real Lemma

We define the 2-norm and the $\ell_2$-space:

**Definition 2.6** Consider a random signal $z(k) \in \mathbb{R}^n$, the 2-norm of $z$ is defined as:

$$\|z\|_2^2 = \mathbb{E} \sum_{k=1}^{\infty} z^T(k) z(k)$$

If a signal $z$ has a finite 2-norm it is said to be mean-square summable.
The Hilbert-space of all mean-square summable signals is denoted by $\ell_2(\mathbb{N})$, or just $\ell_2$.

Consider the following DMJLS, and assume it is stochastically stabilizable:

$$\mathscr{G}: \; x(k+1) = A_{\theta_k} x(k) + E_{\theta_k} w(k) \tag{2.6}$$

$$z(k) = C_{\theta_k} x(k) + D_{\theta_k} w(k) \tag{2.7}$$

The $\mathscr{H}_\infty$ norm [1] of $\mathscr{G}$ can be defined as:

[1] The $\mathscr{H}_\infty$ -norm of a stable complex-valued transfer matrix is the supremum of its maximum singular value over the unit circle, and it equals the $\ell_2$-gain in time domain. Therefore, using the term "$\mathscr{H}_\infty$ norm" for DMJLs is an abuse of notation since $\mathscr{H}_\infty$ norm can be defined for LTI systems only. The term "$\ell_2$-gain" might be more appropriate.

**Definition 2.7 (Seiler et al., 2003)** The system $\mathscr{G}$ defined by (2.6) is said to have a $\mathscr{H}_\infty$ norm less than $\gamma > 0$ if:

$$\sup_{\theta_0 \in \mathscr{M}} \sup_{0 \neq w \in \ell_2} \frac{\|z\|_2^2}{\|w\|_2^2} < \gamma^2$$

where $x(0) = 0$. The notation is $\|\mathscr{G}\|_\infty < \gamma$.

The bounded real lemma provides a way to check the above definition. Here is its statement:

**Theorem 2.2 (Seiler et al., 2003)** The system $\mathscr{G}$ defined by (2.6) is second-moment stable and $\|\mathscr{G}\|_\infty < \gamma$ if and only if there exist matrices $\{P_i\} > 0, i = 1, .., M$ satisfying:

$$\begin{bmatrix} A_i & E_i \\ C_i & D_i \end{bmatrix}^T \begin{bmatrix} \bar{P}_i & 0 \\ 0 & I \end{bmatrix} \begin{bmatrix} A_i & E_i \\ C_i & D_i \end{bmatrix} - \begin{bmatrix} P_i & 0 \\ 0 & \gamma^2 I \end{bmatrix} < 0 \tag{2.8}$$

where $\bar{P}_i = \sum_{j=1}^M \pi_{ij} P_j$.

If the Markov chain satisfies the following condition on the transition probabilities:

$$\forall i, \pi_{ij} = \pi_j,$$

then the bounded real lemma simplifies to:

**Theorem 2.3 (Seiler et al., 2005)** The system $\mathscr{G}$ defined by (2.6) with a Markov chain satisfying $\forall i, \pi_{ij} = \pi_j$ is second-moment stable and $\|\mathscr{G}\|_\infty < \gamma$ if and only if there exists matrix $P > 0$ satisfying:

$$\sum_{i=1}^M \pi_j \begin{bmatrix} A_i & E_i \\ C_i & D_i \end{bmatrix}^T \begin{bmatrix} P & 0 \\ 0 & I \end{bmatrix} \begin{bmatrix} A_i & E_i \\ C_i & D_i \end{bmatrix} - \begin{bmatrix} P & 0 \\ 0 & \gamma^2 I \end{bmatrix} < 0 \tag{2.9}$$

### 2.4.1 A Variation on the Bounded Real Lemma

In the later chapters, we need a modified version of the bounded real lemma: Let $\tau_1, ..., \tau_N > 0$, and let $i \in \{1, .., N\}$ be given. Consider the following DMJLS which is assumed to be stochastically stabilizable:

$$\mathscr{G}: \quad x(k+1) = A_{\theta_k} x(k) + \sqrt{\tau_i} E_{\theta_k} w(k) \tag{2.10}$$

$$z(k) = \begin{bmatrix} C_{\theta_k} \\ \sqrt{\sum_{\nu \neq i} \tau_\nu^{-1}} H_{\theta_k} \end{bmatrix} x(k) + \sqrt{\tau_i} \begin{bmatrix} D_{\theta_k} \\ \sqrt{\sum_{\nu \neq i} \tau_\nu^{-1}} G_{\theta_k} \end{bmatrix} w(k) \tag{2.11}$$

We state the following version of the bounded real lemma:

**Lemma 2.1** The system $\mathscr{G}$ in (2.10) is stochastically stable and $\|\mathscr{G}\|_\infty < 1$ if and only if there exist matrices $\{P_j\} > 0$ that satisfy the following system of matrix inequalities:

$$\left[\begin{array}{cc|ccc} P_j & \bullet & \bullet & \bullet & \bullet \\ 0 & \tau_i^{-1}I & \bullet & \bullet & \bullet \\ \hline A_j & E_j & (\sum_\ell \pi_{j\ell}P_\ell)^{-1} & \bullet & \bullet \\ C_j & D_j & 0 & I & \bullet \\ \tilde{H}_j & \tilde{G}_j & 0 & 0 & \tilde{I}_i \end{array}\right] > 0 \tag{2.12}$$

where $\tilde{I}_i = \text{diag}[\tau_1 I \dots \tau_{i-1} I \ \tau_{i+1} I \ \dots \tau_N I]$, $\tilde{H}_j = [H_j^T \dots H_j^T]^T$,$\tilde{G}_j = [G_j^T \dots G_j^T]^T$ (concatenated $N-1$ times).

***Proof:*** Using Schur's complement Boyd et al. (1994), we can write (2.12) as:

$$\begin{bmatrix} P_j & 0 \\ 0 & \tau_i^{-1}I \end{bmatrix} - \begin{bmatrix} A_j & E_j \\ C_j & D_j \\ \tilde{H}_j & \tilde{G}_j \end{bmatrix}^T \begin{bmatrix} \bar{P}_j & 0 & 0 \\ 0 & I & 0 \\ 0 & 0 & \tilde{I}_i^{-1} \end{bmatrix} \begin{bmatrix} A_j & E_j \\ C_j & D_j \\ \tilde{H}_j & \tilde{G}_j \end{bmatrix} > 0 \tag{2.13}$$

which is equivalent to:

$$\begin{bmatrix} P_j & 0 \\ 0 & \tau_i^{-1}I \end{bmatrix} - \begin{bmatrix} A_j^T\bar{P}_jA_j + C_j^TC_j + \tilde{H}_j^T\tilde{I}_i^{-1}\tilde{H}_j & A_j^T\bar{P}_jE_j + D_j^TC_j + \tilde{H}_j^T\tilde{I}_i^{-1}\tilde{G}_j \\ E_j^T\bar{P}_jA_j + C_j^TD_j + \tilde{G}_j^T\tilde{I}_i^{-1}\tilde{H}_j & E_j^T\bar{P}_jE_j + D_j^TD_j + \tilde{G}_j^T\tilde{I}_i^{-1}\tilde{G}_j \end{bmatrix} > 0 \tag{2.14}$$

Note that $\tilde{H}_j^T\tilde{I}_i^{-1}\tilde{H}_j = \left(\sum_{\nu\neq i}\tau_\nu^{-1}\right)H_j^TH_j$ and hence it can be written as:

$$\begin{bmatrix} P_j & 0 \\ 0 & \tau_i^{-1}I \end{bmatrix} - \tag{2.15}$$
$$\begin{bmatrix} A_j & E_j \\ C_j & D_j \\ \sqrt{\sum_{\nu\neq i}\tau_\nu^{-1}}H_j & \sqrt{\sum_{\nu\neq i}\tau_\nu^{-1}}G_j \end{bmatrix}^T \begin{bmatrix} \bar{P}_j & 0 & 0 \\ 0 & I & 0 \\ 0 & 0 & I \end{bmatrix} \begin{bmatrix} A_j & E_j \\ C_j & D_j \\ \sqrt{\sum_{\nu\neq i}\tau_\nu^{-1}}H_j & \sqrt{\sum_{\nu\neq i}\tau_\nu^{-1}}G_j \end{bmatrix}^T > 0$$

The last inequality can be recognized as the bounded real lemma Seiler et al. (2003) for a scaled version of system (2.10) (with input $\sqrt{\tau_i}w(k)$). Hence, we conclude that it is equivalent to the stochastic stability of the scaled system and that the $\mathscr{H}_\infty$ for the scaled system is less than $\tau_i^{-1}$, which is equivalent to the stochastic stability of $\mathscr{G}$ and $\|\mathscr{G}\|_\infty < 1$. ■

If the Markov chain satisfies the condition $\forall i, \pi_{ij} = \pi_j$, then we can state the following Lemma:

**Lemma 2.2** The system $\mathscr{G}$ in (2.10) satisfying $\pi_{ij} = \pi_j$ is stochastically stable and $\|\mathscr{G}\|_\infty < 1$ if and only if there exist matrix $P > 0$ that satisfy the LMI:

$$\begin{bmatrix} P & 0 \\ 0 & \tau_i^{-1} I \end{bmatrix} - \sum_{j=1}^{M} \begin{bmatrix} A_j & E_j \\ C_j & D_j \\ \tilde{H}_j & \tilde{G}_j \end{bmatrix}^T \begin{bmatrix} P & 0 & 0 \\ 0 & I & 0 \\ 0 & 0 & \tilde{I}_i^{-1} \end{bmatrix} \begin{bmatrix} A_j & E_j \\ C_j & D_j \\ \tilde{H}_j & \tilde{G}_j \end{bmatrix} > 0 \tag{2.16}$$

where $\tilde{I}_i = \text{diag}[\tau_1 I \dots \tau_{i-1} I \ \tau_{i+1} I \ \dots \tau_N I]$, $\tilde{H}_j = [H_j^T \dots H_j^T]^T$,$\tilde{G}_j = [G_j^T \dots G_j^T]^T$ (concatenated $N-1$ times).

***Proof:*** The proof is similar to the proof of Lemma 2.1, except that it uses the special version of the bounded real lemma stated in Theorem 2.2. ■

## 2.5 $\mathscr{H}_\infty$ Control

Robust control is a vital branch of control theory since it aims at warranting a minimum acceptable performance regardless of all possible disturbances such as model uncertainties, noise, etc... This problem can be formulated efficiently as minimizing the $\mathscr{L}_2$-gain of the system from the disturbances to costs, which is known as the $\mathscr{H}_\infty$ control problem because of equality of the $\mathscr{H}_\infty$ norm of the transfer matrix and the $\mathscr{L}_2$-gain for linear time-invariant systems.
Consider the DMJLS:

$$\begin{aligned} \mathscr{P}: \ x_{k+1} &= A_{\theta_k} x_k + B_{\theta_k} u_{\theta_k} + E_{\theta_k} w_k \\ z_k &= C_{\theta_k} x_k + D_{\theta_k} u_k \\ y_k &= G_{\theta_k} x_k + L_{\theta_k} w_k \end{aligned} \tag{2.17}$$

where $x, u, w, z, y$ are the state, control input, exogenous input (e.g. disturbance), regulated variable and the measurement, respectively. We need to synthesize a control law $u_k = \mathscr{K}(y_k)$ such that the closed loop system $\mathscr{P}_c$ satisfies the $\mathscr{H}_\infty$ norm bound: $\|\mathscr{P}_{c,wz}\|_\infty < \gamma$, for a given $\gamma$.

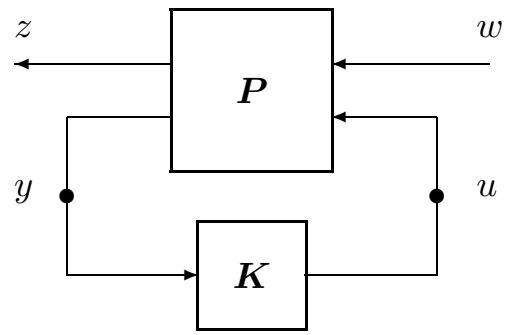


Figure 2.1: Standard $\mathscr{H}_\infty$ Control Problem Block Diagram

Figure 2.1 depicts the problem block diagram.

### 2.5.1 The State Feedback Problem

The case when $y_k = x_k$ is called the state feedback problem. We need to synthesize a static state feedback controller of the form:

$$u_k = K_{\theta_k} x_k \tag{2.18}$$

Even though the $\mathscr{H}_\infty$ control problem has been considered long time ago for DMJLSs, it is interesting to note that there are no necessary and sufficient LMI conditions available in the literature for the elementary state feedback problem. The early papers approached the problem using coupled Riccati inequalities, where sufficient conditions were provided by Fragoso et al. (1995), Boukas et al. (1997), and necessary and sufficient conditions by Costa et al. (1996). Discrete coupled Riccati equations are usually solved via iterative techniques (Abou-Kandil et al., 1995) which are difficult to be initialized. Also, transformation of the Riccati inequalities to LMIs via Schur complements (Ait-Rami et al., 1996) does not work directly in the discrete time case.

Later papers have used LMIs for various $\mathscr{H}_\infty$ state feedback problems, for example with mixed $\mathscr{H}_2/\mathscr{H}_\infty$ criteria (Costa et al., 1998), norm-bounded uncertainty (Shi et al., 1999), time-delays (Cao et al., 1999), polytypic uncertainties (Palhares et al., 2001), uncertain transition probabilities (Boukas, 2009), etc.., however, none of them gave necessary and sufficient conditions, and only sufficient conditions were provided. In this subsection, we fill this longstanding gap in the literature. Our solution was inspired by the work of Geromel et al. (2009).

**Theorem 2.4** The system (2.17) is stochastically stabilizable with a disturbance attenuation level $\gamma$ via decentralized mode-dependent state feedback control of the form (2.18)

if and only if there exist symmetric matrices $Q_i$ and matrices $Y_i$, $J_i$ and $Z_{ij}$ of compatible dimensions satisfying the LMIs

$$\begin{bmatrix} Q_i & \bullet & \bullet & \bullet \\ 0 & \gamma^2 I & \bullet & \bullet \\ A_i Q_i + B_i Y_i & E_i & J_i + J_i' - Z_{pi} & \bullet \\ C_i Q_i + D_i Y_i & 0 & 0 & I \end{bmatrix} > 0 \tag{2.19}$$

$$\begin{bmatrix} Z_{ij} & \bullet \\ J_i & Q_i \end{bmatrix} > 0 \tag{2.20}$$

In the affirmative case, suitable state-feedback gains are given by $K_i = Y_i Q_i^{-1}$.

***Proof:*** For the necessity, assume that the system is stochastically stabilizable with $\gamma$ disturbance attenuation level. Hence, the closed-loop system satisfies (2.8). Define $Q_i := P_i^{-1}$, $Y_i = K_i Q_i$. Taking the Schur's complement and multiplying (2.8) to the right by $\mathrm{diag}[Q_i, I, I, I]$ and to the left by its transpose we obtain

$$\begin{bmatrix} Q_i & \bullet & \bullet & \bullet \\ 0 & \gamma^2 I & \bullet & \bullet \\ A_i Q_i + B_i Y_i & E_i & \hat{Q}_i & \bullet \\ C_i Q_i + D_i Y_i & 0 & 0 & I \end{bmatrix} > 0 \tag{2.21}$$

where $\hat{Q}_i = (\sum_{j=1}^{M} \pi_{ij} Q_j^{-1})^{-1}$.
For $J_i = \hat{Q}_i$ and $Z_{ij} = \hat{Q}_i Q_j^{-1} \hat{Q}_i + \varepsilon I$ with $\varepsilon > 0$ we see that (2.20) is verified and we obtain

$$J_i + J_i' - \bar{Z}_i = \hat{Q}_i - \varepsilon I$$

hence, taking $\varepsilon > 0$ sufficiently small, inequality (2.22) implies that (2.19) holds and the claim follows.

For the sufficiency, assume that (2.19) and (2.20) hold. From (2.20) we have $Z_{ij} > J_i' Q_j^{-1} J_i$ and consequently multiplying these inequalities by $p_{ij}$ and summing up for all $j \in \mathscr{M}$ we obtain

$$\begin{aligned} J_i + J_i' - Z_{pi} &= J_i + J_i' - \sum_{j=1}^{N} \pi_{ij} Z_{ij} \\ &\leq J_i + J_i' - J_i' \hat{Q}_i^{-1} J_i \\ &\leq \hat{Q}_i - (J_i - \hat{Q}_i)' \hat{Q}_i^{-1} (J_i - \hat{Q}_i) \\ &\leq \hat{Q}_i \end{aligned} \tag{2.22}$$

which implies that (2.19) remains valid if the diagonal term on the second column and row is replaced by $\hat{Q}_i$. Multiplying the inequality obtained after the replacements indicated by (2.22) to the right by $\mathrm{diag}[Q_i^{-1}, I, I, I]$ and to the left by its transpose we obtain

$$\begin{bmatrix} Q_i^{-1} & \bullet & \bullet & \bullet \\ 0 & \gamma^2 I & \bullet & \bullet \\ A_i + B_i K_i & E_i & \sum_{j=1}^N \pi_{ij} Q_j^{-1} & \bullet \\ C_i + D_i K_i & 0 & 0 & I \end{bmatrix} > 0 \tag{2.23}$$

which is equivalent to (2.8) for the closed loop matrices $A_i + B_i K_i$, $C_i + D_i K_i$ and for $P_i = Q_i^{-1}$.

■

### 2.5.2 The Output Feedback Problem

The output feedback problem requires the synthesis of controller in the form:

$$\xi_{k+1} = \tilde{A}_{\theta_k} \xi_k + \tilde{B}_{\theta_k} y_k \tag{2.24}$$

$$u_k = \tilde{C}_{\theta_k} \xi_k + \tilde{D}_{\theta_k} y_k \tag{2.25}$$

The problem was solved recently by Geromel et al. (2009), we state their main result:

**Theorem 2.5 (Geromel et al., 2009)** The system (2.17) is stochastically stabilizable with a disturbance attenuation level $\gamma$ via decentralized mode-dependent output feedback (2.24) if and only if there exist symmetric matrices $\{X_j\}, \{Y_j\}, \{Z_{j\ell}\}$, matrices $\{W_j\}, \{R_j\}\{S_j\}$, $\{T_j\}, \{J_j\}$, $j, \ell = 1, ..., M$, satisfying the LMIs:

$$\left[\begin{array}{ccc|ccc} Y_j & \bullet & \bullet & \bullet & \bullet & \bullet \\ I & X_j & \bullet & \bullet & \bullet & \bullet \\ 0 & 0 & \gamma^2 I & \bullet & \bullet & \bullet \\ \hline A_j Y_j + B_j S_j & A_j + B_j T_j G_j & F_j + B_j T_j L_j & J_j + J_j^T - \bar{Z}_{j\ell} & \bullet & \bullet \\ W_j & \bar{X}_j + R_j G_j & \bar{X}_j F_j + R_j L_j & I & \bar{X}_j & \bullet \\ C_j Y_j + D_j S_j & C_j + D_j T_j G_j & 0 & 0 & 0 & I \end{array}\right] > 0 \tag{2.26}$$

$$\begin{bmatrix} Z_{j\ell} & J_j^T \\ J_j & Y_\ell \end{bmatrix} > 0 \tag{2.27}$$

where $\bar{X}_j = \sum_{\ell=1}^M \pi_{j\ell} X_\ell$, $\bar{Z}_j = \sum_{\ell=1}^M \pi_{j\ell} Z_{j\ell}$.

Furthermore, the corresponding mode-dependent controller matrices are given as:

$$\begin{bmatrix} \tilde{A}_j & \tilde{B}_j \\ \tilde{C}_j & \tilde{D}_j \end{bmatrix} = \begin{bmatrix} \hat{Y}_j - \bar{X}_j & \bar{X}_j B_j \\ 0 & I \end{bmatrix}^{-1} \begin{bmatrix} W_j - \bar{X}_j A_j Y_j & R_j \\ S_j & T_j \end{bmatrix} \begin{bmatrix} Y_j & 0 \\ G_j Y_j & I \end{bmatrix}^{-1} \tag{2.28}$$

where $\hat{Y}_j = \sum_{\ell=1}^{M} \pi_{j\ell} Y_\ell^{-1}$.

### 2.5.3 The Filtering Problem

The output feedback problem requires the synthesis of filter in the form:

$$\xi_{k+1} = \tilde{A}_{\theta_k} \xi_k + \tilde{B}_{\theta_k} y_k \tag{2.29}$$

$$\bar{z}_k = \tilde{C}_{\theta_k} \xi_k + \tilde{D}_{\theta_k} y_k \tag{2.30}$$

such as to minimize the $\mathscr{H}_\infty$ norm from the disturbance to the error $(z_k - \bar{z}_k)$. The problem was solved recently by Gonçalves et al. (2009), we state their main result:

**Theorem 2.6** Gonçalves et al. (2009) The error system resulting from applying filter (2.29) to system (2.17) is stochastically stable with a disturbance attenuation level $\gamma$ if and only if there exist symmetric matrices $\{X_j\}, \{Y_j\}$, matrices $\{W_j\}, \{R_j\}\{S_j\}, \{T_j\}$, $j = 1, ..., M$, satisfying the LMIs:

$$\left[\begin{array}{ccc|ccc} Y_j & \bullet & \bullet & \bullet & \bullet & \bullet \\ Y_j & X_j & \bullet & \bullet & \bullet & \bullet \\ 0 & 0 & \gamma^2 I & \bullet & \bullet & \\ \hline \bar{Y}_j A_j & \bar{Y}_j A_j & \bar{Y}_j F_j & \bar{Y}_j & \bullet & \bullet \\ \bar{X}_j A_j + R_j G_j + W_j & \bar{X}_j A_j + R_j G_j & \bar{X}_{ij} F_j + R_j L_j & \bar{Y}_{ij} & \bar{X}_j & \bullet \\ C_j - T_{ij} G_{ij} - S_j & C_{ij} - T_j G_j - T_j L_j & 0 & 0 & I & \end{array}\right] > 0 \tag{2.31}$$

where $\bar{X}_j = \sum_{\ell=1}^{M} \pi_{j\ell} X_\ell, \bar{Y}_j = \sum_{\ell=1}^{M} \pi_{j\ell} Y_{j\ell}$. Furthermore, the corresponding mode-dependent estimator matrices are

$$\begin{bmatrix} \tilde{A}_j & \tilde{B}_j \\ \tilde{C}_j & \tilde{D}_j \end{bmatrix} = \begin{bmatrix} \bar{Y}_j - \bar{X}_j & 0 \\ 0 & I \end{bmatrix}^{-1} \begin{bmatrix} W_j & R_j \\ -S_j & T_j \end{bmatrix} \tag{2.32}$$

## 2.6 Quadratic Stability

Quadratic stability is a notion of stability for uncertain systems. It implies the existence of a single quadratic Lyapunov function that has negative difference for all admissible uncer-

tainties. We assume that the uncertainties are norm-bounded.

Consider the DMJLS:

$$x(k+1) = (A_{\theta_k} + \Delta A_{\theta_k})x(k) = (A_{\theta_k} + E_{\theta_k}\Delta(k)H_{\theta_k})x(k) \tag{2.33}$$

where $\Delta(k)$ is a time-varying matrix satisfying the norm-bound $\Delta(k)\Delta^T(k) \leq I$ for all $k$. Assume that there exists a (switching) quadratic Lyapunov function $V(x(k), \theta_k) = x^T(k)P_{\theta_k}x(k)$ that is able to guarantee the stability of the system for all $\Delta$. This can be formulated as: (for $i = 1, .., M$)

$$\begin{aligned}\Delta V &= \mathbb{E}[V(x(k+1), \theta_{k+1})|x(k), \theta_k = i] - V(x(k), \theta_k)\\ &= x^T(k+1)\mathbb{E}[P_{\theta_{k+1}}|\theta_k = i]x^T(k+1) - x(k)^T P_{\theta_k}x(k)\\ &= x^T(k)[(A_i + E_i\Delta(k)H_i)^T(\textstyle\sum_{j=1}^M \pi_{ij}P_j)(A_i + E_i\Delta(k)H_i) - P_i]x(k)\end{aligned}$$

This motivates the following definition:

**Definition 2.8 (Boukas et al., 1998)** The system (2.33) is quadratically stochastically stable if there exists $\{P_i\} > 0$, $i = 1, .., M$, such that the following system of inequalities is satisfied:

$$(A_i + E_i\Delta(k)H_i)^T(\textstyle\sum_{j=1}^M \pi_{ij}P_j)(A_i + E_i\Delta(k)H_i) - P_i < 0 \tag{2.34}$$

for all $\Delta(k)\Delta^T(k) \leq I$.

To show that quadratic stochastic stability implies mean-square stability refer to Boukas et al. (1998).

The previous definition does not give a method to construct the matrices $\{P_i\}$. The following theorem provides the answer:

**Theorem 2.7** The system (2.33) is quadratically stochastically stable if and only if there exist matrices $\{P_i\} > 0$ and a constant $\tau > 0$ such that the following inequalities hold for $i = 1, .., M$:

$$\begin{bmatrix} A_i & E_i \\ H_i & 0 \end{bmatrix}^T \begin{bmatrix} \bar{P}_i & 0 \\ 0 & \tau^{-1}I \end{bmatrix} \begin{bmatrix} A_i & E_i \\ H_i & 0 \end{bmatrix} - \begin{bmatrix} P_i & 0 \\ 0 & \tau^{-1}I \end{bmatrix} < 0 \tag{2.35}$$

***Proof:*** Using Schur's complement, inequalities (2.35) are equivalent to the system of coupled Riccati inequalities

$$A_i^T\bar{P}_iA_i + A_i^T\bar{P}_iE_i(\tau^{-1} - E_i^T\bar{P}E_i)^{-1}E_i^T\bar{P}_i^TA_i - P_i + \tau H_i^TH_i < 0 \tag{2.36}$$

$$\tau^{-1}I - E^T\bar{P}E < 0 \tag{2.37}$$

The rest follows from Boukas et al. (1998). ■

Note that (2.35) is the same as (2.8). Actually there is a strong connection between quadratic stability and $\mathscr{H}_\infty$ norm. Note that the system (2.33) can be written in the equivalent form:

$$x(k+1) = A_{\theta_k}x(k) + E_{\theta_k}\eta(k) \tag{2.38}$$

$$\psi(k) = H_{\theta_k}x(k) \tag{2.39}$$

with the norm bound $\|\eta(k)\|^2 \leq \|\psi(k)\|^2$.

If we scale $\eta(k)$ down by $\sqrt{\tau}$ and do all other necessary scalings, then (2.35) will result from applying the bounded real lemma to system (2.38). Therefore, we get the following corollary:

**Corollary 2.1** The system (2.33) is quadratically stochastically stable if and only if the system (2.38) has unitary $\mathscr{H}_\infty$ norm.

This connection between $\mathscr{H}_\infty$ norm and quadratic stability will be crucial to our later developments, since it implies that the quadratic stabilizability problem can be reduced to an $\mathscr{H}_\infty$ control problem.

## 2.7 The *S*-Procedure

The $S$-procedure is a well-known method to convert the feasibility of a certain inequality subject to inequality constraints into a feasibility of a single augmented inequality (Boyd et al., 1994). The procedure is usually lossy. However, in some cases it can be lossless, such as the one considered by Yakubovich (1992). The following version of the $S$-procedure is stateed here, and it will be instrumental in the later chapters.

**Lemma 2.3** Consider a DMJLS $x(k+1) = A(\sigma_k)x(k) + B(\sigma_k)w(k)$ that satisfies the stability assumption: For any initial conditions $x(0), \sigma_0$, if $w \in \ell_2$ then $x \in \ell_2$. Consider the functionals:

$$\mathscr{F}_0(w) = \mathbb{E}\sum_{k=0}^{\infty} x^T(k)R_0x(k) + w^T(k)S_0w(k) + b_0 \tag{2.40}$$

$$\mathscr{F}_i(w) = \mathbb{E}\sum_{k=0}^{\infty} x^T(k)R_ix(k) + w^T(k)S_iw(k) + b_i \tag{2.41}$$

where $\{R_i\}, \{S_i\}$ are symmetric, and $\{b_i\} > 0$. Suppose that:

1. $\mathscr{F}_0(w) \leq 0$ for all $w \in \ell_2$ such that $\mathscr{F}_i(w) \geq 0$, $i = 1, ..., N$

2. There exists $w \in \ell_2$ such that $\mathscr{F}_i(w) > 0$

Then there exists constants $\tau_i \geq 0$ such that:

$$\mathscr{F}_0(w) + \sum_{i=1}^{N} \tau_i \mathscr{F}_i(w) \leq 0 \tag{2.42}$$

***Proof:*** The proof follows the lines of Ugrinovskii et al. (2005), see also Petersen et al. (1996). ■

# 3 Chapter

# Decentralized State-Feedback Control With Packet Losses

## 3.1 Introduction

In this chapter, we look at the problem of decentralized state-feedback of DMJLS subsystems inter- connected with norm-bounded interactions. We consider two performance criteria. The first is achieving optimal $\mathscr{H}_\infty$ disturbance attenuation level, and the other one guaranteeing a worst-case average quadratic cost. For both of them, we provide necessary and sufficient linear matrix inequality (LMI) conditions for the synthesis of mode-dependent controllers that robustly stabilize the large-scale system against the uncertain interactions and guarantee the required performance. We also provide simplified conditions for the case of Bernoulli-type Markov chains.

Furthermore, controller synthesis procedures are provided for local mode-dependent controllers. Compared to the global-mode dependent controllers, it has some advantages. First, the global mode of the large-scale system does not need to be available to all controllers, which poses a communication burden in the global mode-dependent case. Second, local controllers will be switching between substantially smaller number of modes compared to the global mode-dependent case.

The developed theorems are applied to the problem of decentralized control of discrete-time interconnected systems with local controllers communicating with their subsystems over lossy communication channels. Assuming a Gilbert-Elliot model for packet losses, the networked control system can be formulated as Markovian jump linear system.

This is the first work, to the best of our knowledge, that considers the synthesis of *decentralized*, in contrast to distributed, control laws for large-systems with stochastic packet-

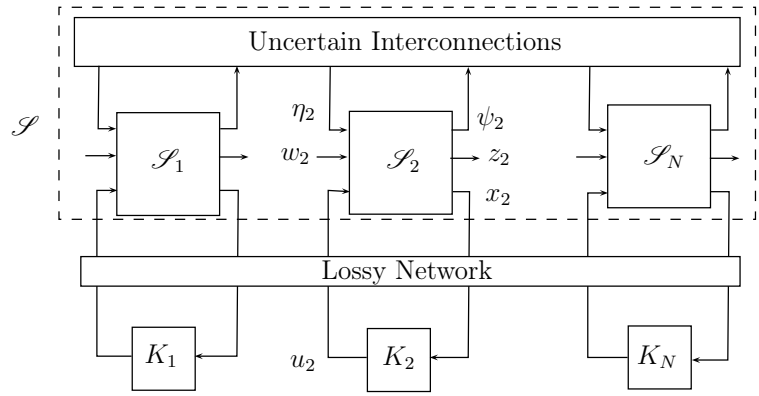


Figure 3.1: Block diagram of the decentralized NCS with state feedback and disturbance input.

losses. Also, the problem of decentralized control of DMJLSs has not been investigated yet, which is in contrast to the continuous-time variant, see for example Ugrinovskii et al. (2005) and the references therein. Furthermore, it is also interesting to note that the problem of robust state-feedback with norm-bounded uncertainties for DMJLSs has not been solved with explicit necessary and sufficient LMIs in literature.

## 3.2 Decentralized State-feedback Control with Packet Losses

Consider Figure 3.1, let $\mathscr{S}$ be composed of the subsystems $\mathscr{S}_i$ be described as the standard model (Petersen et al., 2000):

$$x_i(k+1) = A_i x_i(k) + B_i u_i(k) + F_i w_i(k) + \sum_{j\neq i} (\Gamma_{xij}(k) x_j(k) + \Gamma_{uij}(k) u_j(k)) \tag{3.1}$$

$$z_i(k) = C_i x_i(k) + D_i u_i(k) \tag{3.2}$$

where $x_i \in \mathbb{R}^{n_i}, u_i \in \mathbb{R}^{m_i}, z_i \in \mathbb{R}^{\rho_i}, w_i \in \mathbb{R}^{o_i}$ are the state, input, regulated variable and disturbance of the subsystem, respectively. The interaction matrices has the structure $[\Gamma_{xij}(k)\ \Gamma_{yij}(k)] = E_i \Delta_{ij}(k)[H_j\ G_j]$, where $\Delta_{ij}$ are time-varying and known only to satisfy the norm-bound $\sum_{\nu\neq i} \Delta_{i\nu}\Delta_{i\nu}^T \leq I$. We denote $\eta_i(k) = \sum_{j\neq i} \Delta_{ij}(H_j x_j + G_j u_j)$. Note this uncertainty model (when $\Delta_{ij} = 0$) includes the case in which that subsystems are interacting over communication channels with packet losses. Note that the disturbance and the regulated variable are associated only with a disturbance attenuation problem which will be considered in the next section. In the fourth section, we consider the problem of guaranteeing a certain bound on a quadratic cost in which there is no external disturbance.

As in Figure 3.1, we can have packet-drops in both of the forward and backward channels, or in only one of them. Each forward channel is assumed to consist of $n_i$ independent

communication channels where $n_i$-subsystem's states are sent separately to local controllers, similarly the $m_i$ control signals are assumed to be sent over sperate channels[1].
Each communication channel is assumed to be a stochastic switch which is described by a two-state Markov chains $\theta_{ij}(k), \varphi_{i\ell}(k) \in \{0, 1\}$, $j = 1, .., n_i, \ell = 1, .., m_i$, with the failure rate: $\pi_f = \Pr(\theta_{ij}(k) = 0|\theta_{ij}(k-1) = 1)$, and the recovery rate: $\pi_r = \Pr(\theta_{ij}(k) = 1|\theta_{ij}(k-1) = 0)$. This model is called the *Gilbert-Elliot erasure model*. The special case when $\pi_r = 1 - \pi_f$ is called the *Bernoulli erasure model*.
We assume a simple and standard procedure for handling packet-losses: if a packet is lost, it is assumed to be zero[2]. This assumption enables us to design state feedback gains with advantage of no extra dynamics in the controller.

Assume the we have $L_i$ communication channels per subsystem, which means that augmented Markov chain $\sigma_i(k)$ has $2^{L_i}$ states. As a result, each subsystem can be written as a discrete-time Markovian jump system (DMJLS):

$$x_i(k+1) = A_i x_i(k) + \bar{B}_i(\sigma_i(k))u_i(k) + E_i\eta_i(k) + F_i w_i(k) \tag{3.3}$$

$$z_i(k) = C_i x_i(k) + D_i u_i(k) \tag{3.4}$$

where $\bar{B}_i(\sigma_i(k)) = \Theta_i(\sigma_i(k))B_i\Phi_i(\sigma_i(k))$, $\Theta_i = \mathrm{diag}[\theta_{i1}...\theta_{1n_i}]$, $\Phi_i = \mathrm{diag}[\varphi_{i1}...\varphi_{1m_i}]$. If we have packet-drops in forward channel only for example, then $\bar{B}_i(\sigma_i(k)) = \Theta_i(\sigma_i(k))B_i$.

Assume that the pairs $(A_{ij}, \bar{B}_{ij})$ are stochastically stabilizable, we will apply the theory to be developed later to design local mode-dependent (or packet-loss dependent) controllers of the form:

$$u_i(k) = K_i(\sigma_i(k))x_i(k) \tag{3.5}$$

[1]The formulation applies easily to the case of states and inputs grouped into fewer number of channels, or packet-losses occurring in only of the forward and backward channels.

[2]Packet holding can't be used in a *static* state feedback setup, since the holded packet will increase the dimension of the state space, and the problem becomes a static output feedback problem which is very hard (Blondel et al., 2000). The situation of packet-holding can be handled by considering *dynamic* controllers which will be discussed in the next chapter.

## 3.3 Decentralized $\mathscr{H}_\infty$ Disturbance Attenuation

### 3.3.1 $\mathscr{H}_\infty$ Problem Formulation

Consider a large-scale system $\mathscr{S}$ composed of $N$ interconnected discrete-time Markovian jump linear subsystems $\{\mathscr{S}_i\}_{i=1}^N$. The subsystem $\mathscr{S}_i$ is given as:

$$x_i(k+1) = A_i(\sigma_k)x_i(k) + B_i(\sigma_k)u_i(k) + F_i(\sigma_k)w_i(k) + \sum_{j\neq i}(\Gamma_{xij}(k)x_j(k) + \Gamma_{uij}(k)u_j(k)) \tag{3.6}$$

$$z_i(k) = C_i(\sigma_k)x_i(k) + D_i(\sigma_k)u_i(k) \tag{3.7}$$

where $x_i \in \mathbb{R}^{n_i}$, $u_i \in \mathbb{R}^{m_i}$ and $x = [x_1^T\ x_2^T\ ..\ x_N^T]^T$. The interaction matrices are structured as:

$$[\Gamma_{xij}(k)\ \Gamma_{uij}(k)] = E_i(\sigma_k)\Delta_{ij}(k)[H_j(\sigma_k)\ G_j(\sigma_k)] \tag{3.8}$$

where $\Delta_{ij} \in \mathbb{R}^{r\times s}$ are time-varying and known only to satisfy the norm-bound:

$$\sum_{j\neq i}\Delta_{ij}(k)\Delta_{ij}^T(k) \leq I \tag{3.9}$$

Note that if we use the terminology that $\eta_i(k) = \sum_{j\neq i}\Delta_{ij}(k)(H_j(\sigma_k)x_j(k)+G_j(\sigma_k)u_j(k))$ is an interaction signal, then the above bound is equivalent to

$$\begin{aligned}\|\eta_i(k)\|^2 &\leq \sum_{j\neq i}\|\psi_j(k)\|_2^2 \\ &\triangleq \sum_{j\neq i}\|H_j(\sigma_k)x_j(k) + G_j(\sigma_k)u_j(k)\|_2^2\end{aligned} \tag{3.10}$$

If an interaction signal $\eta_i(k) \in \ell_2$ satisfy the above bound, it is said to be *admissible*. The set of all admissible interaction signals for $\mathscr{S}$ is denoted by $\Xi$.

The Markov chain $\sigma_k \in \{1,..,M\}$ is a sequence of random variables with the following transition probabilities: $\pi_{ij} = \Pr[\sigma_{k+1} = i|\sigma_k = j]$. We consider a mode-dependent decentralized state-feedback of the form:

$$u_i(k) = K_i(\sigma_k)x_i(k) \tag{3.11}$$

We assume that the pairs $(A_i(\sigma_k), B_i(\sigma_k)), i = 1,...,N$ are stochastically stabilizable (Costa et al., 2005, Ji et al., 1991).

Consider the problem of decentralized quadratic stabilization with disturbance attenua-

tion via state feedback control:

**Definition 3.1** The large-scale system $\mathscr{S}$ composed of subsystems $\{\mathscr{S}_i\}$ (3.6) with (3.10) is said to be quadratically stochastically stabilizable with disturbance attenuation level $\gamma > 0$ via decentralized state feedback (3.11) if there exists $\{\tilde{K}_{ij}\}$ such that the closed-loop large-scale system $\mathscr{S}_c$ is quadratically stable and $\|\mathscr{S}_{c,zw}\|_\infty < \gamma$ for all $\eta \in \Xi$.

Refer to Definition 2.7 for the $\mathscr{H}_\infty$ norm.

### 3.3.2 The Main Result

Note that (2.12) is linear except in the nonlinear term $\widehat{Q}_j = (\sum_\ell \pi_{j\ell} Q_\ell^{-1})^{-1}$. A transformation will be utilized to transform the matrix inequality into a linear one. A similar manipulation was used by Geromel et al. (2009) for output feedback.

Considering again our decentralized control problem, Define the following auxiliary subsystem:

$$x_i(k+1) = A_i(\sigma_k)x_i(k) + B_i(\sigma_k)u_i(k) + \bar{E}_i(\sigma_k)\bar{\eta}_i(k) + \bar{F}_i(\sigma_k)\bar{w}_i(k) \tag{3.12}$$

$$\bar{z}_i(k) = \bar{C}_i(\sigma_k)x_i(k) + \bar{D}_i(\sigma_k)u_i(k) \tag{3.13}$$

where $\bar{E}_{ij} = \sqrt{\tau_i}E_{ij}$, $\bar{F}_{ij} = \sqrt{\tau_i}F_{ij}$,

$$\bar{C}_{ij} = \begin{bmatrix} C_{ij} \\ \left(\sum_{j\neq i}\tau_j^{-1}\right)^{\frac{1}{2}} H_{ij} \end{bmatrix}, \ \bar{D}_{ij} = \begin{bmatrix} D_{ij} \\ \left(\sum_{j\neq i}\tau_j^{-1}\right)^{\frac{1}{2}} G_{ij} \end{bmatrix}$$

After applying controller (3.11) to the system (3.12), we get the closed-loop subsystem:

$$\begin{aligned} x_i(k+1) &= (A_i(\sigma_k) + B_i(\sigma_k)K_i(\sigma_k))x_i(k) + \bar{E}_i(\sigma_k)\bar{\eta}_i(k) + \bar{F}_i(\sigma_k)\bar{w}_i(k) \\ \bar{z}_i(k) &= (\bar{C}_i(\sigma_k) + \bar{D}_i(\sigma_k)K_i(\sigma_k))x_i(k) \end{aligned} \tag{3.14}$$

The following theorem provides the LMI needed to synthesize decentralized controllers:

**Theorem 3.1** (a) The large-scale system $\mathscr{S}$ is quadratically stochastically stabilizable with disturbance attenuation level $\gamma > 0$ via decentralized mode-dependent feedback (3.11) if and only if there exist symmetric matrices $\{Q_{ij}\}$, $\{S_{ij\ell}\}$, matrices $\{Y_{ij}\}$, $\{R_{ij}\}$ and constants

$\{\tau_i\}$, $i = 1, .., N$, $j, \ell = 1, ..., M$, satisfying the LMIs:

$$\left[\begin{array}{ccc|ccc} Q_{ij} & \bullet & \bullet & \bullet & \bullet & \bullet \\ 0 & \tau_i I & \bullet & \bullet & \bullet & \bullet \\ 0 & 0 & \gamma^2 I & \bullet & \bullet & \bullet \\ \hline A_{ij}Q_{ij} + B_{ij}Y_{ij} & \tau_i E_{ij} & F_{ij} & R_{ij} + R_{ij}^T - \bar{S}_{ij} & \bullet & \bullet \\ C_{ij}Q_{ij} + D_{ij}Y_{ij} & 0 & 0 & 0 & I & \bullet \\ \tilde{H}_{ij}Q_{ij} + \tilde{G}_{ij}Y_{ij} & 0 & 0 & 0 & 0 & \tilde{I}_i \end{array}\right] > 0 \tag{3.15}$$

$$\begin{bmatrix} S_{ij\ell} & R_{ij}^T \\ R_{ij} & Q_{i\ell} \end{bmatrix} > 0 \tag{3.16}$$

where $\bar{S}_{ij} = \sum_{\ell=1}^{M} \pi_{j\ell} S_{ij\ell}$. Furthermore, the corresponding mode-dependent control gain is given by:

$$K_{ij} = Y_{ij} Q_{ij}^{-1} \tag{3.17}$$

(b) The optimal attenuation level $\gamma^*$ can be found by solving the semi-definite program:

$$\text{min. } \gamma^2 \tag{3.18}$$

subject to (3.15), (3.16).

### 3.3.3 Proof of Theorem 3.1

**Sufficiency**

From (3.16) we have $S_{ij\ell} > R_{ij}^T Q_{i\ell}$, and hence

$$R_{ij} + R_{ij}^T - \bar{S}_{ij} = R_{ij} + R_{ij}^T - \sum_{\ell=1}^{M} S_{ij\ell} \tag{3.19}$$

$$\leq R_{ij} + R_{ij}^T - H_{ij}^T \widehat{Q}_{ij}^{-1} H_{ij} \tag{3.20}$$

$$\leq \widehat{Q}_{ij} \tag{3.21}$$

where the last inequality is true since for any $X > 0, Y$ we have $Y^T X^{-1} Y - Y - Y^T + X = (Y - X)^T X^{-1} (Y - X) \geq 0$.

By (3.19), we conclude that if $R_{ij} + R_{ij}^T - \bar{S}_{ij}$ was replaced by $\widehat{Q}_{ij}$, then (3.15) still holds.

Using (3.17), we have:

$$\left[\begin{array}{ccc|ccc} Q_{ij} & \bullet & \bullet & \bullet & \bullet & \bullet \\ 0 & \tau_i I & \bullet & \bullet & \bullet & \bullet \\ 0 & 0 & \gamma^2 I & \bullet & \bullet & \bullet \\ \hline A_{ij}Q_{ij}+B_{ij}Y_{ij} & \tau_i E_{ij} & F_{ij} & \widehat{Q}_{ij} & \bullet & \bullet \\ C_{ij}Q_{ij}+D_{ij}Y_{ij} & 0 & 0 & 0 & I & \bullet \\ \tilde{H}_{ij}Q_{ij}+\tilde{G}_{ij}Y_{ij} & 0 & 0 & 0 & 0 & \tilde{I}_i \end{array}\right] > 0 \tag{3.22}$$

Let $P_{ij} = Q_{ij}^{-1}$, multiply (3.22) by $[P\ I\ I\ I]$ from both sides, and by Schur complement

$$\begin{bmatrix} P_{ij} & 0 & 0 \\ 0 & \tau_i^{-1} I & 0 \\ 0 & 0 & \gamma^2 I \end{bmatrix} - \begin{bmatrix} \begin{pmatrix} \hat{A}_{ij}^T \bar{P}_{ij} \hat{A}_{ij} + \hat{C}_{ij}^T \hat{C}_{ij} \\ + \left(\sum_{\nu \neq i} \tau_\nu^{-1}\right) \hat{H}_{ij}^T \hat{H}_{ij} \end{pmatrix} & \bullet & \bullet \\ E_{ij}^T \bar{P}_{ij} \hat{A}_{ij} & E_{ij}^T \bar{P}_{ij} E_{ij} & \bullet \\ F_{ij}^T \bar{P}_{ij} \hat{A}_{ij} & F_{ij}^T \bar{P}_{ij} E_{ij} & F_{ij}^T \bar{P}_{ij} F_{ij} \end{bmatrix} > 0 \tag{3.23}$$

where $\hat{A}_{ij} = A_{ij} + B_{ij}K_{ij}$, $\hat{C}_{ij} = C_{ij} + D_{ij}K_{ij}$, and $\hat{H}_{ij} = H_{ij} + G_{ij}K_{ij}$.

The closed-loop large-scale system composed of subsystems (3.14) can be written as:

$$x(k+1) = (A(\sigma_k) + \bar{B}(\sigma_k)K(\sigma_k))x(k) + \bar{E}(\sigma_k)\bar{\eta}(k) + \bar{F}(\sigma_k)\bar{w}(k) \tag{3.24}$$

$$\bar{z}(k) = (\bar{C}(\sigma_k) + \bar{D}(\sigma_k)K(\sigma_k))x(k) \tag{3.25}$$

Define $P_j = \mathrm{diag}[P_{1j}\ ...\ P_{1N}]$. Since each subsystem satisfies (3.23), it is evident that the system (3.24) satisfies the following matrix inequality with block-diagonal matrices:

$$\begin{bmatrix} \hat{A}_j^T \bar{P}_j \hat{A}_j + \hat{C}_j^T \hat{C}_j - P_j & \bullet & \bullet \\ E_j^T \bar{P}_j \hat{A}_j & E_j^T \bar{P}_j E_j & \bullet \\ F_j^T \bar{P}_j \hat{A}_j & F_j^T \bar{P}_j E_j & F_j^T \bar{P}_j F_j - \gamma^2 I \end{bmatrix} < \begin{bmatrix} -\tilde{T}_2 \hat{H}_j^T \hat{H}_j & 0 & 0 \\ 0 & \tilde{T}_1 I & 0 \\ 0 & 0 & 0 \end{bmatrix} \tag{3.26}$$

where $\tilde{T}_1 = \mathrm{diag}[\tau_1^{-1} I\ ...\ \tau_N^{-1} I]$, $\tilde{T}_2 = \mathrm{diag}\left[\left(\sum_{\nu \neq 1} \tau_\nu^{-1}\right) I ... \left(\sum_{\nu \neq N} \tau_\nu^{-1}\right) I\right]$. Note that

$$\begin{aligned} \begin{bmatrix} x \\ \eta \end{bmatrix}^T \begin{bmatrix} -\tilde{T}_2 \hat{H}_j^T \hat{H}_j & 0 \\ 0 & \tilde{T}_1 I \end{bmatrix} \begin{bmatrix} x \\ \eta \end{bmatrix} &= \sum_{i=1}^N -\left(\sum_{\nu \neq i} \tau_\nu^{-1}\right) \|\psi_i(k)\|^2 + \|\eta_i(k)\|^2 \\ &= \sum_{i=1}^N \tau_i^{-1} \left(-\sum_{\nu \neq i} \|\psi_\nu(k)\|^2 + \|\eta_i(k)\|^2\right) \leq 0 \end{aligned} \tag{3.27}$$

where the last inequality is true for all admissible interactions by definition. Therefore, by (3.26) and (3.27), we conclude that:

$$\begin{bmatrix} x \\ \eta \\ w \end{bmatrix}^T \begin{bmatrix} \begin{pmatrix} \hat{A}_j^T \bar{P}_j \hat{A}_j + \\ \hat{C}_j^T \hat{C}_j - P_j \end{pmatrix} & \bullet & \bullet \\ E_j^T \bar{P}_j \hat{A}_j & E_j^T \bar{P}_j E_j & \bullet \\ F_j^T \bar{P}_j \hat{A}_j & F_j^T \bar{P}_j E_j & F_j^T \bar{P}_j F_j - \gamma^2 I \end{bmatrix} \begin{bmatrix} x \\ \eta \\ w \end{bmatrix} < 0 \tag{3.28}$$

for all $\|\eta_i\|_2^2 \leq \sum_{\nu \neq i} \|\psi_\nu\|_2^2$. This implies:

$$\begin{bmatrix} \zeta \\ \eta \\ w \end{bmatrix}^T \left( \begin{bmatrix} \hat{A}_j & E_j & F_j \\ \hat{C}_j & 0 & 0 \end{bmatrix}^T \begin{bmatrix} \bar{P}_j & 0 \\ 0 & I \end{bmatrix} \begin{bmatrix} \hat{A}_j & E_j & F_j \\ \hat{C}_j & 0 & 0 \end{bmatrix} - \begin{bmatrix} P_j & 0 & 0 \\ 0 & 0 & 0 \\ 0 & 0 & \gamma^2 I \end{bmatrix} \right) \begin{bmatrix} \zeta \\ \eta \\ w \end{bmatrix} < 0 \tag{3.29}$$

for all $w \in \ell_2, \eta \in \Xi$.

Hence, it follows from the bounded real lemma (Lemma 2.1) that $\|\mathscr{S}_{c,zw}\| < \gamma$ for all $\eta \in \Xi$. ■

**Necessity**

Suppose that we have $\|\mathscr{S}_{c,zw}\| < \gamma$ for all uncertain interactions. This implies that there exists $\varepsilon > 0$ such that:

$$\|z\|_2^2 - \gamma^2 \|w\|^2 \leq -\varepsilon \|w\|^2 \text{ for all } w \in \ell_2, \eta \in \Xi \tag{3.30}$$

Define the following quadratic functionals:

$$\mathscr{F}_0(\eta, w) = \|z\|_2^2 - \gamma^2 \|w\|^2 + \varepsilon \|w\|^2 \tag{3.31}$$

$$\mathscr{F}_i(\eta, w) = \sum_{j \neq i} \|\psi_j\|_2^2 - \|\eta_i\|_2^2 + \varepsilon \|w\|^2, i = 1, .., N \tag{3.32}$$

Consider the set of inputs $\eta \in \ell_2$ such that $\mathscr{F}_i(\eta) \geq 0$, which implies that it satisfies (3.10), hence they are admissible. Since (3.30) is satisfied, we conclude that $\mathscr{F}_0(\eta) \leq 0$. Furthermore, we can choose $\|w\|_2^2 > 0$ and the inputs $\eta$ independently such that $\mathscr{F}_i(\eta) > 0$.
We satisfied the conditions of Lemma 2.3 with $b_i = \varepsilon \|w\|^2$, which implies that we can find constants $\tau_i^{-1} \geq 0$, $i = 1, ..., N$, such that (2.42) holds for any input $\eta \in \Xi, w \in \ell_2$. This can

be written as:

$$\|z\|_2^2 - \gamma^2\|w\|^2 + \sum_{i=1}^{N} \tau_i^{-1}(\textstyle\sum_{\nu\neq i}\|\psi_\nu\|_2^2 - \|\eta_i\|^2) \leq -(1+\textstyle\sum_{i=1}^{N}\tau_i^{-1})\varepsilon\|w\|_2^2 \tag{3.33}$$

To show that $\tau_i^{-1} > 0$, assume that $\tau_i^{-1} = 0$, set $w = 0$, $\eta_j = 0, j \neq i$. Note that by substituting in (3.33), it will be invalid since $\eta_i \neq 0$ and this is contradiction.
Since $\sum_{i=1}^{N}\tau_i^{-1}\sum_{\nu\neq i}\|\psi_\nu\|_2^2 = \sum_{i=1}^{N}(\sum_{\nu\neq i}\tau_\nu^{-1})\|\psi_i\|_2^2$, we can write (3.33) in the following form:

$$\|\bar{z}\|_2^2 - \|\bar{w}\|^2 \leq -\bar{\varepsilon}\|w\|_2^2 \tag{3.34}$$

where $\bar{\varepsilon} = (1+\sum_{i=1}^{N}\tau_i^{-1})\varepsilon$, and $\bar{w} = [\tilde{T}_1^{1/2}\eta \;\; \gamma^{-1}w]$. This implies that the closed-loop system (3.24) satisfies the $\mathscr{H}_\infty$ -bound:

$$\sup_{\eta,w,\sigma_0} \frac{\|\bar{z}(k)\|_2^2}{\|\bar{w}(k)\|_2^2} < 1 \tag{3.35}$$

If we set interconnection disturbances $w_j = 0, \eta_j = 0, j \neq i$ in (3.35), then $\|\bar{z}_j\|_2^2 = 0, j \neq i$. This implies:

$$\sup_{\eta_i,w_i,\sigma_0} \frac{\|\bar{z}_i(k)\|_2^2}{\|\bar{w}_i(k)\|_2^2} < 1 \tag{3.36}$$

This implies that controller (3.11) achieves a unitary $\mathscr{H}_\infty$ -norm for every auxiliary closed-loop subsystem (3.14). Substitute for $A_j, E_j, C_j$ in (2.12) by $A_{ij} + B_{ij}K_{ij}, E_{ij}, C_{ij} + D_{ij}K_{ij}$, respectively. The resulting inequality will be (3.22). Note that by denoting $Y_{ij} = K_{ij}Q_{ij}$, we can solve for $Y_{ij}$ to get $K_{ij}$ and vice versa.
In (3.22), there exists $\delta > 0$ such that the inequality is preserved while replacing $\widehat{Q}_{ij}$ by $\widehat{Q}_{ij} - \delta I$. Consequently, denote $R_{ij} = \widehat{Q}_{ij}$, $S_{ij\ell} = \widehat{Q}_{ij}Q_\ell^{-1}\widehat{Q}_{ij} + \delta I$. As a result, (3.16) is satisfied. We have

$$\bar{S}_{ij} = \widehat{Q}_{ij}\left(\sum_{\ell=1}^{M}\pi_{j\ell}Q_{i\ell}^{-1}\right)\widehat{Q}_{ij} + \delta I$$

Hence,

$$R_{ij} + R_{ij}^T - \bar{S}_{ij} = \widehat{Q}_{ij} - \delta I,$$

and (3.15) is verified. ■

### 3.3.4 The case of Markov chain satisfying $\pi_{ij} = \pi_j$

The conditions of Theorem 3.1 will simplify considerably if the Markov chain satisfy the condition that $\forall i, \pi_{ij} = \pi_j$. This type of conditions is satisfied in networked system with Bernoulli erasure model.

**Theorem 3.2** (a)The large-scale system $\mathscr{S}$ satisfying that $\forall i, \pi_{ij} = \pi_j$ is quadratically stochastically stabilizable with disturbance attenuation level $\gamma > 0$ via decentralized mode-dependent feedback (3.11) if and only if there exist symmetric matrices $\{Q_i\}$, matrices $\{Y_{ij}\}$ and constants $\{\tau_i\}$, $i = 1, .., N$, $j = 1, ..., M$, satisfying the LMIs:

$$\left[\begin{array}{c|ccc} W_i & \bullet & \dots & \bullet \\ \hline \sqrt{\pi_1}\,\Psi_{i1} & Z_i & \dots & \bullet \\ \vdots & \vdots & \ddots & \vdots \\ \sqrt{\pi_M}\,\Psi_{iM} & 0 & \dots & Z_i \end{array}\right] > 0 \tag{3.37}$$

where $W_i = \text{diag}[Q_i \ \tau_i I \ \gamma^2 i], Z_i = diag[Q_i \ I \ \tilde{I}_i]$

$$\Psi_{ij} = \begin{bmatrix} A_{ij}Q_i + B_{ij}Y_{ij} & \tau_i E_{ij} & F_{ij} \\ D_{ij}Q_i + D_{ij}Y_{ij} & 0 & 0 \\ \tilde{H}_{ij}Q_i + \tilde{G}_{ij}Y_{ij} & 0 & 0 \end{bmatrix}$$

Furthermore, the corresponding mode-dependent control gain is given by: $K_{ij} = Y_{ij}Q_i^{-1}$.

(b) The optimal attenuation level $\gamma^*$ can be found by solving the semi-definite program (3.18) subject to (3.37).

***Proof:*** The proof follows the lines of the proof of Theorem 3.1, except that it uses Lemma 2.2 instead of Lemma 2.1. ■

### 3.3.5 Local-Mode Dependent Control

In this section, we give sufficient conditions for the existence of local-mode dependent decentralized control. We assume that the local subsystems are Markovian also, which enables us to view the local mode-dependent controllers as cluster observation controllers do Val et al. (2002).

Suppose that every subsystem $\mathscr{S}_i$ is associated with a local Markov chain $\sigma_i(k)$ with $M_i$ states.

$$\begin{aligned} x_i(k+1) &= A_i(\sigma_i(k))x_i(k) + B_i(\sigma_i(k))u_i(k) + F_i(\sigma_i(k))w_i(k) + \textstyle\sum_{j\neq i}(\Gamma_{xij}(k)x_j(k) + \Gamma_{uij}(k)u_j(k)) \\ z_i(k) &= C_i(\sigma_i(k))x_i(k) + D_i(\sigma_i(k))u_i(k) \end{aligned} \tag{3.38}$$

with (3.8) defined accordingly.

We consider a *local* mode-dependent decentralized state-feedback of the form:

$$u_i(k) = K_i(\sigma_i(k))x_i(k) \tag{3.39}$$

We define the global Markov state $\sigma(k) = (\sigma_1(k)\dots\sigma_N(k))$. The transition matrix for the augmented state can be computed as: $\Lambda = \bigotimes_{i=1}^{N}\Lambda_i$, where $\Lambda_i$ is the transition matrix of $\sigma_i(k)$ and $\otimes$ denotes the Kronecker product. Note that if the large-scale system is considered as a whole, then the $i^{\text{th}}$ local controller (3.39) observes the *cluster* of states $\mathscr{C}_{iq}$ defined as: $\mathscr{C}_{iq} = \{(\sigma_1,..,\sigma_N) : \sigma_i(k) = q\}$, thus $(\sigma_1(k)\dots\sigma_N(k))$ are considered as one cluster for a certain $\sigma_i(k)$.

**Corollary 3.1** (a) The large-scale system $\mathscr{S}$ composed of subsystem (3.38) is quadratically stochastically stabilizable with disturbance attenuation level $\gamma > 0$ via decentralized local mode-dependent feedback (3.39) if it satisfies LMIs (3.16), (3.16) with the equality constraints:

$$Q_{ij} = Q_{iq}, S_{ij\ell} = S_{iq\ell}, Y_{ij} = Y_{iq}, R_{ij} = R_{iq}, \tag{3.40}$$

where $j \in \mathscr{C}_{iq}, q = 1,...,M_i$. The local-mode dependent controller is given by: $K_{iq} = Y_{iq}Q_{iq}^{-1}$.

(b) The optimal attenuation level $\gamma^*$ can be found by solving the semi-definite program (3.18) subject to (3.15), (3.16), (3.40).

If we have also the advantage that state-space of the local subsystems is invariant in each cluster, as in the case of the networked control system discussed before, this enables us to state the following result:

**Corollary 3.2** (a) The large-scale system $\mathscr{S}$ composed of subsystem (3.38) is quadratically stochastically stabilizable with disturbance attenuation level $\gamma > 0$ via decentralized local mode-dependent feedback (3.39) if there exist symmetric matrices $\{Q_{iq}\}, \{S_{iq\ell}\}$, matrices $\{Y_{iq}\}, \{R_{iq}\}$ and constants $\{\tau_i\}$, $i = 1,..,N$, $q, \ell = 1,...,M_i$, satisfying the LMIs:

$$\left[\begin{array}{ccc|ccc} Q_{iq} & \bullet & \bullet & \bullet & \bullet & \bullet \\ 0 & \tau_i I & \bullet & \bullet & \bullet & \bullet \\ 0 & 0 & \gamma^2 I & \bullet & \bullet & \bullet \\ \hline A_{iq}Q_{iq} + B_{iq}Y_{iq} & \tau_i E_{iq} & F_{iq} & R_{iq} + R_{iq}^T - \bar{S}_{iq} & \bullet & \bullet \\ C_{iq}Q_{iq} + D_{iq}Y_{iq} & 0 & 0 & 0 & I & \bullet \\ \tilde{H}_{iq}Q_{iq} + \tilde{G}_{iq}Y_{iq} & 0 & 0 & 0 & 0 & \tilde{I}_i \end{array}\right] > 0 \tag{3.41}$$

and

$$\begin{bmatrix} S_{iq\ell} & R_{iq}^T \\ R_{iq} & Q_{i\ell_i} \end{bmatrix} > 0 \tag{3.42}$$

Furthermore, the corresponding mode-dependent control gain is given by:

$$K_{iq} = Y_{iq} Q_{iq}^{-1} \tag{3.43}$$

(b) The optimal attenuation level $\gamma^*$ can be found by solving the semi-definite program (3.18) subject to (3.41), (3.42).

***Proof:*** To establish that (3.15) and (3.16) hold, we define $Q_{ij} = Q_{iq}$ for all $j \in \mathscr{C}_{iq}$. Notice that we can convert the dependence on $q$ to $j$ in all variables since we have invariant dynamics of $\mathscr{S}_i$ under the $i^{\text{th}}$ cluster. ■

**Remark 3.1** Note that Corollary 3.2, when applicable, gives us a clear computational advantage over Theorem 3.1, since the number of matrix inequalities is $N\sum_{i=1}^{N} M_i$ and $N\prod_{i=1}^{N} M_i$, respectively.

## 3.4 Guaranteed Cost Decentralized Controller Design Via Linear Matrix Inequalities

### 3.4.1 Guaranteed Cost Problem Formulation

Consider a large-scale system $\mathscr{S}$ composed of $N$ interconnected discrete-time Markovian jump linear subsystems $\{\mathscr{S}_i\}_{i=1}^{N}$ as in Figure 3.2. The subsystem $\mathscr{S}_i$ is given as:

$$x_i(k+1) = A_i(\sigma_k)x_i(k) + B_i(\sigma_k)u_i(k) + \sum_{j\neq i}(\Gamma_{xij}(j)x_j(k) + \Gamma_{uij}(j)ux_j(k)) \tag{3.44}$$

where $x_i \in \mathbb{R}^{n_i}$, $u_i \in \mathbb{R}^{m_i}$ and $x = [x_1^T\ x_2^T\ ..\ x_N^T]^T$. The interaction matrices $\Gamma_{ij}(k)$ are structured as in (3.8) where $\Delta_{ij} \in \mathbb{R}^{r\times s}$ are time-varying and known only to satisfy the norm-bound (3.9). Note that if we use the terminology that $\eta_i(k) = \sum_{j\neq i}\Delta_{ij}(k)(H_j(\sigma_k)x_j(k) + G_j(\sigma_k)u_j(k))$ is an interaction signal, then the norm bound is equivalent to (3.10).

If an interaction signal $\eta_i(k) \in \ell_2$ satisfies the norm bound, it is said to be *admissible*. The set of all admissible interaction signals for $\mathscr{S}$ is denoted by $\Xi$.

The Markov chain $\sigma_k \in \{1,..,M\}$ is a sequence of random variables with the following transition probabilities: $\pi_{ij} = \Pr[\sigma_{k+1} = i|\sigma_k = j]$. Let $\lambda = [\lambda_1...\lambda_M]$, with $\lambda_i > 0$, denote the intial probability distribution vector of $\sigma_k$.

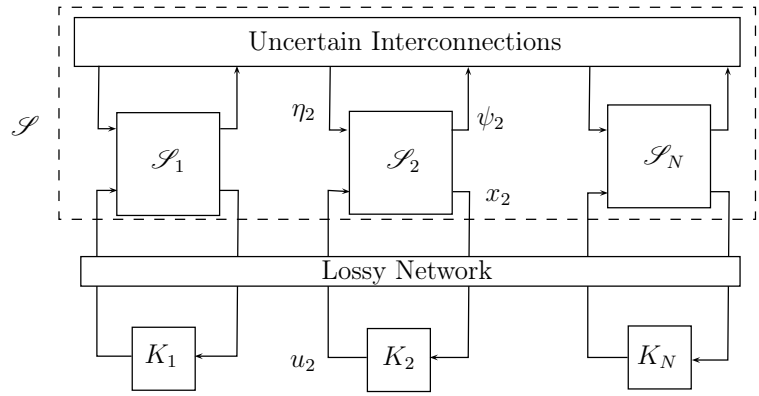


Figure 3.2: Block diagram of the decentralized DMJLS with state feedback.

We consider a mode-dependent decentralized state-feedback of the form:

$$u_i(k) = K_i(\sigma_k)x_i(k) \tag{3.45}$$

We aim at guaranteeing a worst case quadratic performance $\sup_{\Xi} J < c, c > 0$, where[3]:

$$J = \mathbb{E}\sum_{i=1}^{N}\left[\sum_{k=0}^{\infty} x_i^T(k)W_i(\sigma_k)x_i(k) + u_i^T(k)V_i(\sigma_k)u_i(k)\middle| x_i(0), \sigma_0\right] \tag{3.46}$$

where $W_{ij}, V_{ij} > 0$. We define

$$C_{ij} = \left[W_{ij}^{1/2^T}\ 0\right]^T, D_{ij} = \left[0\ V_{ij}^{1/2^T}\right]^T$$

.

We assume that the pairs $(A_i(\sigma_k), B_i(\sigma_k)), i = 1, ..., N$ are stochastically stabilizable (Costa et al., 2005). According to Ji et al. (1991), the three notions of stochastic stabilizability, mean-square stabilizability and exponential stabilizability are equivalent for a DMJLS.

The closed-loop large-scale system $\mathscr{S}_c$ with decentralized state-feedback control (3.45) can be written as:

$$x(k+1) = (A(\sigma_k) + B(\sigma_k)K(\sigma_k) + E(\sigma_k)\Delta(k)H(\sigma_k))x(k) \tag{3.47}$$

where $\Delta(k) = [\Delta_{ij}(k)]_{i,j=1}^{N}, \Delta_{ii} = 0$, $A(\sigma_k) = \text{diag}[A_1(\sigma_k)$ ... $A_N(\sigma_k)]$, $\bar{B}(\sigma_k) = \text{diag}[B_1(\sigma_k)$ ... $B_N(\sigma_k)]$, $\bar{C}(\sigma_k) = \text{diag}[\bar{C}_1(\sigma_k)$ ... $\bar{C}_N(\sigma_k)]$, $\bar{D}(\sigma_k) = \text{diag}[\bar{D}_1(\sigma_k)$ ... $\bar{D}_N(\sigma_k)]$ and $K(\sigma_k) = \text{diag}[K_1(\sigma_k)$ ... $K_N(\sigma_k)]$.

[3]The problem of guaranteed cost control is a standard problem in control, see for example Petersen et al. (2000)

We state the following motivating lemma:

**Lemma 3.1** If there exist matrices $\{P_j\}$,$\{K_j\}$ such that the following matrix inequalities hold for $j = 1, .., M$

$$(A_j + B_jK_j + E_j\Delta H_j)^T\bar{P}_j(A_j + B_jK_j + E_j\Delta H_j) - P_j + U_j + K^T(\sigma_k)V(\sigma_k)K(\sigma_k) < 0, \tag{3.48}$$

for all $\Delta(k)$ satisfying $\sum_{j\neq i}\Delta_{ij}(k)\Delta_{ij}^T(k) \leq I$, then $\mathscr{S}_c$ is quadratically stable and $J \leq \mathbb{E}x^T(0)P(\sigma_0)x(0)$.

***Proof:*** For the first part, Equation (3.48) guarantees the quadratic stability of the system since for any admissible $\Delta$:

$$(A_j + B_jK_j + E_j\Delta H_j)^T\bar{P}_j(A_j + B_jK_j + E_j\Delta H_j) - P_j < 0$$

To establish the second part, let $V(x(k), \sigma_k) = x^T(k)P(\sigma_k)x(k)$. It follows from (3.48) that if $\sigma_k = j$:

$$\begin{aligned}
&x(k)^TU_jx(k) + u^T(k)V_ju(k)\\
&\leq x^T(k)(A_j + B_jK_j + E_j\Delta H_j)^T\bar{P}_j(A_j + B_jK_j + E_j\Delta H_j - P_j)x(k)\\
&= V(x(k), \sigma_k) - \mathbb{E}[V(x(k+1), \sigma_k)|\sigma_k = i]
\end{aligned}$$

summing from 0 to $\infty$ and taking the expected value:

$$J \leq V(x(0), \sigma_0) = \mathbb{E}x^T(0)P(\sigma_0)x(0) \tag{3.49}$$

where $\lim_{k\to\infty}\mathbb{E}V(x(k), \sigma_k) = 0$, since the system is quadratically stable. ■

This motivates the following definition of our problem, see also Petersen et al. (1998):

**Definition 3.2** The large-scale system $\mathscr{S}$ with subsystems $\{\mathscr{S}_i\}_{i=1}^N$ defined in (3.44),(3.10) with cost (3.46) is quadratically stochastically stabilizable with guaranteed cost via decentralized state-feedback of the form (3.45) if there exist matrices $\{P_j\}$,$\{K_j\}$ such that (3.48) holds for all $\Delta(k)$ satisfying $\sum_{j\neq i}\Delta_{ij}(k)\Delta_{ij}^T(k) \leq I$.

### 3.4.2 The main result

Note that (2.12) is linear except in the nonlinear term $\widehat{Q}_j = (\sum_\ell \pi_{j\ell}Q_\ell^{-1})^{-1}$. A transformation will be utilized to transform the matrix inequality into a linear one. A similar manipulation

was used by Geromel et al. (2009) for output feedback.

Considering again our decentralized control problem, define the following auxiliary subsystem:

$$x_i(k+1) = A_i(\sigma_k)x_i(k) + B_i(\sigma_k)u_i(k) + \bar{E}_i(\sigma_k)\bar{\eta}_i(k) \tag{3.50}$$

$$\bar{z}_i(k) = \bar{C}_i(\sigma_k)x_i(k) + \bar{D}_i(\sigma_k)u_i(k) \tag{3.51}$$

where $\bar{E}_{ij} = \sqrt{\tau_i}E_{ij}$,

$$\bar{C}_{ij} = \begin{bmatrix} C_{ij} \\ \left(\sum_{j\neq i}\tau_j^{-1}\right)^{\frac{1}{2}} H_{ij} \end{bmatrix}, \ \bar{D}_{ij} = \begin{bmatrix} D_{ij} \\ \left(\sum_{j\neq i}\tau_j^{-1}\right)^{\frac{1}{2}} G_{ij} \end{bmatrix}$$

After applying controller (3.45) to System (3.50), we get closed-loop subsystem:

$$\begin{aligned} x_i(k+1) &= (A_i(\sigma_k) + B_i(\sigma_k)K_i(\sigma_k))x_i(k) + \bar{E}_i(\sigma_k)\bar{\eta}_i(k) \\ \bar{z}_i(k) &= (\bar{C}_i(\sigma_k) + \bar{D}_i(\sigma_k)K_i(\sigma_k))x_i(k) \end{aligned} \tag{3.52}$$

If apply Lemma 2.1 to (3.52), then our problem reduces to solving to a set of $MN$ matrix inequalities in the variables $\{Q_{ij}\}$, $\{K_i\}$ and $\{\tau_i\}$. However, the matrix inequalities are nonlinear due the presence of $\widehat{Q}_{ij}$ and the bilinear term of $K_i$ and $Q_i$. We state the main theorem which provides the equivalent LMIs:

**Theorem 3.3** (a) The large-scale system $\mathscr{S}$ is quadratically stochastically stabilizable with guaranteed cost via decentralized mode-dependent feedback (3.45) if and only if there exist symmetric matrices $\{Q_{ij}\}, \{S_{ij\ell}\}$, matrices $\{Y_{ij}\}, \{R_{ij}\}$ and constants $\{\tau_i\}$, $i = 1, .., N$, $j, \ell = 1, ..., M$, satisfying the LMIs:

$$\left[\begin{array}{cc|ccc} Q_{ij} & \bullet & \bullet & \bullet & \bullet \\ 0 & \tau_i I & \bullet & \bullet & \bullet \\ \hline A_{ij}Q_{ij} + B_{ij}Y_{ij} & \tau_i E_{ij} & R_{ij} + R_{ij}^T - \bar{S}_{ij} & \bullet & \bullet \\ C_jQ_j + D_{ij}Y_{ij} & 0 & 0 & I & \bullet \\ \tilde{H}_{ij}Q_{ij} + \tilde{G}_{ij}Q_{ij} & 0 & 0 & 0 & \tilde{I}_i \end{array}\right] > 0 \tag{3.53}$$

$$\begin{bmatrix} S_{ij\ell} & R_{ij}^T \\ R_{ij} & Q_{i\ell} \end{bmatrix} > 0 \tag{3.54}$$

where $\tilde{I}_i = \text{diag}[\tau_1 I \ldots \tau_{i-1} I \ \tau_{i+1} I \ \ldots \tau_N I]$, $\tilde{H}_j = [H_j^T \ldots H_j^T]^T$ (concatenated $N-1$ times),

$\tilde{G}_j = [G_j^T \dots G_j^T]^T$, and $\bar{S}_{ij} = \sum_{\ell=1}^{M} \pi_{j\ell} S_{ij\ell}$. Furthermore, the corresponding mode-dependent control gain is given by:

$$K_{ij} = Y_{ij} Q_{ij}^{-1} \tag{3.55}$$

(b) If the problem in part (a) is feasible, then via solving the following semi-definite program:

$$\text{minimize} \sum_{i=1}^{N} a_i \tag{3.56}$$

subject to (3.53), (3.54) and

$$\begin{bmatrix} a_i & \bullet \\ X_i & \tilde{Q}_i \end{bmatrix} > 0 \tag{3.57}$$

where $X_i = [\sqrt{\lambda_1} x_i(0) \ \dots \ \sqrt{\lambda_N} x_i(0)]$, and $\tilde{Q}_i = \text{diag}[Q_{i1} \ \dots$
$Q_{iM}]$, the optimal worst-case performance (3.46) achievable via (3.45) can be upper bounded as:

$$\inf_u \sup_\Xi J \leq \sum_{i=1}^{N} a_i \tag{3.58}$$

### 3.4.3 Proof of Theorem 3.3

**Part (a)—Sufficiency**

Using the same method is the proof in §3.3.3, we have:

$$\left[\begin{array}{cc|ccc} Q_{ij} & \bullet & \bullet & \bullet & \bullet \\ 0 & \tau_i I & \bullet & \bullet & \bullet \\ \hline A_{ij}Q_{ij} + B_{ij}K_{ij}Q_{ij} & \tau_i E_{ij} & \widehat{Q}_{ij} & \bullet & \bullet \\ C_j Q_j + D_{ij}K_{ij}Q_{ij} & 0 & 0 & I & \bullet \\ \tilde{H}_{ij}Q_{ij} + G_{ij}K_{ij}Q_{ij} & 0 & 0 & 0 & \tilde{I}_i \end{array}\right] > 0 \tag{3.59}$$

Let $P_{ij} = Q_{ij}^{-1}$, multiply (3.59) by $[P \ I \ I \ I]$ from both sides, and by Schur complement and similar to the proof of Lemma 2.1

$$\begin{bmatrix} P_{ij} & 0 \\ 0 & \tau_i^{-1} I \end{bmatrix} - \begin{bmatrix} \begin{pmatrix} \hat{A}_{ij}^T \bar{P}_{ij} \hat{A}_{ij} + \hat{C}_{ij}^T \hat{C}_{ij} \\ + \left(\sum_{\nu \neq i} \tau_\nu^{-1}\right) \hat{H}_{ij}^T \hat{H}_{ij} \end{pmatrix} & \bullet \\ E_{ij}^T \bar{P}_{ij} \hat{A}_{ij} & E_{ij}^T \bar{P}_{ij} E_{ij} \end{bmatrix} > 0 \tag{3.60}$$

where $\hat{A}_{ij} = A_{ij} + B_{ij}K_{ij}$, $\hat{C}_{ij} = C_{ij} + D_{ij}K_{ij}$, and $\hat{H}_{ij} = H_{ij} + G_{ij}K_{ij}$.

The closed-loop large-scale system composed of subsystems (3.52) can be written as:

$$x(k+1) = (A(\sigma_k) + \bar{B}(\sigma_k)K(\sigma_k))x(k) + \bar{E}(\sigma_k)\bar{\eta}(k) \tag{3.61}$$

$$\bar{z}(k) = (\bar{C}(\sigma_k) + \bar{D}(\sigma_k)K(\sigma_k))x(k) \tag{3.62}$$

Define $P_j = \text{diag}[P_{1j} \ ... \ P_{1N}]$. Since each subsystem satisfies (3.60), it is evident that System (3.61) satisfies the following matrix inequality with block-diagonal matrices:

$$\begin{bmatrix} \hat{A}_j^T \bar{P}_j \hat{A}_j + \hat{C}_j^T \hat{C}_j - P_j & \bullet \\ E_j^T \bar{P}_j \hat{A}_j & E_j^T \bar{P}_j E_j \end{bmatrix} < \begin{bmatrix} -T_2 \hat{H}_j^T \hat{H}_j & 0 \\ 0 & T_1 I \end{bmatrix} \tag{3.63}$$

where $\tilde{T}_1 = \text{diag}[\tau_1^{-1} I \ ... \ \tau_N^{-1} I]$, $\tilde{T}_2 = \text{diag}\left[\left(\sum_{\nu \neq 1} \tau_\nu^{-1}\right) I \ ... \left(\sum_{\nu \neq N} \tau_\nu^{-1}\right) I\right]$. Note that $\eta(k) = \Delta H(\sigma_k)x(k)$, hence

$$\begin{aligned} \begin{bmatrix} x \\ \eta \end{bmatrix}^T \begin{bmatrix} -\tilde{T}_2 \hat{H}_j^T \hat{H}_j & 0 \\ 0 & \tilde{T}_1 I \end{bmatrix} \begin{bmatrix} x \\ \eta \end{bmatrix} &= \sum_{i=1}^{N} - \left(\sum_{\nu \neq i} \tau_\nu^{-1}\right) \|\psi_i(k)\|^2 + \|\eta_i(k)\|^2 \\ &= \sum_{i=1}^{N} \tau_i^{-1} \left(-\sum_{\nu \neq i} \|\psi_\nu(k)\|^2 + \|\eta_i(k)\|^2\right) \leq 0 \end{aligned} \tag{3.64}$$

where the last inequality is true for all admissible interactions. Therefore, by (3.63) and (3.64), we conclude that:

$$\begin{bmatrix} x \\ \eta \end{bmatrix}^T \begin{bmatrix} \hat{A}_j^T \bar{P}_j \hat{A}_j + \hat{C}_j^T \hat{C}_j - P_j & \bullet \\ E_j^T \bar{P}_j \hat{A}_j & \hat{E}_j^T \bar{P}_j E_j \end{bmatrix} \begin{bmatrix} x \\ \eta \end{bmatrix} < 0 \tag{3.65}$$

for all $\|\eta_i\|_2^2 \leq \sum_{\nu \neq i} \|\psi_\nu\|_2^2$. Note that (3.65) is equivalent to (3.48). ■

**Part (a)—Necessity**

Suppose that the given DMJLS is stabilizable via decentralized state-feedback and that condition (3.48) holds. It follows from (3.49) that for any $b > \mathbb{E}x^T(0)P(\sigma_0)x(0)$ there exists $\varepsilon > 0$ such that (3.47) satisfies the following inequality for all $\eta \in \Xi$:

$$(1+\varepsilon)J(\eta) < b - \varepsilon \tag{3.66}$$

Define the following functionals:

$$\mathscr{F}_0(\eta) = (1+\varepsilon)J - b + \varepsilon \tag{3.67}$$

$$\mathscr{F}_i(\eta) = \sum_{j\neq i} \|\psi_j\|_2^2 - \|\eta_i\|_2^2 + \beta_i(x_i(0)), \tag{3.68}$$

where $\beta_i$ are arbitrary functions satisfying $\beta_i(0) = 0, \beta_i(x) > 0$ for $x \neq 0$.
Consider the set of inputs $\eta \in \ell_2$ such that $\mathscr{F}_i(\eta) \geq 0$, which implies (3.10) is satisfied, hence they are admissible. Since (3.66) holds, we conclude that $\mathscr{F}_0(\eta) \leq 0$. Furthermore, since $\beta_i(x_i(0)) > 0$, we can choose the inputs such that $\mathscr{F}_i(\eta) > 0$.
We satisfied the conditions of Lemma 2.3, which implies that we can find constants $\tau_i^{-1} > 0$, $i = 1, ..., N$, such that (2.42) holds for any input $\eta \in \ell_2$. This can be written as:

$$\begin{aligned} &J + \sum_{i=1}^{N} \left[ (\textstyle\sum_{j\neq i} \tau_i^{-1}) \|\psi_i\|_2^2 - \tau_i^{-1} \|\eta_i\|_2^2 \right] \\ &\leq -\varepsilon J + b - \varepsilon - \sum_{i=1}^{N} \tau_i \beta_i(x_i(0)) \end{aligned} \tag{3.69}$$

When $x(0) = 0$, we claim that the following inequality holds $\eta_i \in \Xi$:

$$J + \sum_{i=1}^{N} \left[ (\textstyle\sum_{j\neq i} \tau_i^{-1}) \|\psi_i\|_2^2 - \tau_i^{-1} \|\eta_i\|_2^2 \right] \leq -\varepsilon J \tag{3.70}$$

The proof follows a similar methodology to that of Moheimani et al. (1997b), let $X = [x, u, \psi, \eta]$ and denote $\mathscr{G}(X) = J + \sum_{i=1}^{N} [(\sum_{j\neq i} \tau_i^{-1}) \|\psi_i\|_2^2 - \tau_i^{-1} \|\eta_i\|_2^2]$. Assume that there exists $X_1$ with $x(0) = 0$ such that $\mathscr{G}(X_1) > 0$. Let $X_2$ denote a corresponding vector with $x(0) = x_0$ and $\eta \equiv 0$. Note that since the system is linear, then for every $a \in \mathbb{R}$, $aX_1 + X_2$ satisfies (3.69). But since $\mathscr{G}$ is quadratic, we can write $\mathscr{G}(aX_1 + X_2) = a^2\mathscr{G}(X_1) + \mathscr{G}(X_2) + a\mu(X_1, X_2)$ where $\mu$ is a bilinear term. Note that since $\mathscr{G}(X_1) > 0$ we have $\lim_{a\to\infty} \mathscr{G}(aX_1 + X_2) = \infty$ which contradicts (3.69). We show also that (3.70), implies that $\tau_i^{-1} > 0$, assume that $\tau_i^{-1} = 0$, set $\eta_j = 0, j \neq i$. Note that by substituting in (3.70), it will be invalid since $\eta_i \neq 0$ and this is a contradiction.

Denote $\bar{\eta}_i(k) = \tau^{-1/2}\eta_i(k)$, (3.70) implies that the closed-loop system (3.61) satisfies the following $\mathscr{H}_\infty$ -bound:

$$\sup_{\eta\in\Xi} \frac{\|\bar{z}_i(k)\|^2}{\|\bar{\eta}(k)\|_2^2} < 1 \tag{3.71}$$

If we set interconnection disturbances $\eta_j = 0, j \neq i$ in (3.71), then $\bar{z}_j = 0, j \neq i$. This implies:

$$\sup_{\eta_i \in \Xi_i} \frac{\|\bar{z}_i(k)\|_2^2}{\|\bar{\eta}_i(k)\|_2^2} < 1 \tag{3.72}$$

This implies that controller (3.45) solves the $\mathscr{H}_\infty$ -control problem for every subsystem (3.50). Substitute for $A_j, E_j, C_j$ in (2.12) by $A_{ij} + B_{ij}K_{ij}, E_{ij}, C_{ij} + D_{ij}K_{ij}$, respectively. The resulting inequality will be (3.59).

Using the same argument in §3.3.3, (3.53) is verified. ■

**Part (b)**

Note that since (3.49) holds of arbitrary $\eta \in \Xi$, and if we assume $x_i(0)$ and $\lambda$ to be known, and we take the infimum of both sides, we get:

$$\begin{aligned} \inf_u \sup_\Xi J &= \inf_u \sup_\Xi \sum_{i=1}^N \|z_i\|_2^2 \\ &\leq \inf_u \sum_{i=1}^N x_i^T(0) \left( \sum_{j=1}^M \lambda_j P_{ij} \right) x_i(0) \end{aligned} \tag{3.73}$$

where $\lambda = [\lambda_1, .., \lambda_N]$ is the initial distribution with $\lambda_i > 0$.
Note that minimizing the right side of (3.73) is equivalent to minimizing $\sum_{i=1}^N a_i$ with:

$$a_i > \sum_{j=1}^M \lambda_j x_i^T(0) P_{ij} x_i(0) \tag{3.74}$$

Using the Schur's complement, (3.56) follows. ■

### 3.4.4 The case of Markov chain satisfying $\pi_{ij} = \pi_j$

The conditions of Theorem 3.3 will simplify considerably if the Markov chain satisfies the condition that $\forall i, \pi_{ij} = \pi_j$. This type of conditions is satisfied in networked systems with a Bernoulli erasure model.

**Theorem 3.4** (a) The large-scale system $\mathscr{S}$ satisfying $\forall i, \pi_{ij} = \pi_j$ is quadratically stochastically stabilizable with guaranteed cost via decentralized mode-dependent feedback (3.45) if and only if there exist symmetric matrices $\{Q_i\}$, matrices $\{Y_{ij}\}$ and constants $\{\tau_i\}$,

$i = 1, .., N$, $j = 1, ..., M$, satisfying the LMIs:

$$\left[\begin{array}{c|ccc} W_i & \bullet & \dots & \bullet \\ \hline \sqrt{\pi_1}\,\Psi_{i1} & Z_i & \dots & \bullet \\ \vdots & \vdots & \ddots & \vdots \\ \sqrt{\pi_M}\,\Psi_{iM} & 0 & \dots & Z_i \end{array}\right] > 0 \tag{3.75}$$

where $W_i = \mathrm{diag}[Q_i \ \tau_i I], Z_i = \mathrm{diag}[Q_i \ I \ \tilde{I}_i]$,

$$\Psi_{ij} = \begin{bmatrix} A_{ij}Q_i + B_{ij}Y_{ij} & \tau_i E_{ij} \\ D_{ij}Q_i + D_{ij}Y_{ij} & 0 \\ \tilde{H}_{ij}Q_i + \tilde{G}_{ij}Q_i & 0 \end{bmatrix}$$

Furthermore, the corresponding mode-dependent control gain is given by: $K_{ij} = Y_{ij}Q_i^{-1}$.

(b) If the problem in part (a) is feasible, then the optimal worst-case performance (3.46) achievable via (3.45) can be upper bounded by solving the semi-definite program (3.56) subject to (3.75), (3.57).

***Proof:*** The proof follows the lines of the proof of Theorem 3.3, except that it uses Lemma 2.2 instead of Lemma 2.1. ■

### 3.4.5 Local-Mode Dependent Control

In this section, we give sufficient conditions for the existence of a local-mode dependent decentralized controller. We assume that the local subsystems are Markovian also, which enables us to view the local mode-dependent controllers as cluster observation controllers (do Val et al., 2002).

Suppose that every subsystem $\mathscr{S}_i$ is associated with a local Markov chain $\sigma_i(k)$ with state space of $M_i$ elements.

$$x_i(k+1) = A_i(\sigma_i(k))x_i(k) + B_i(\sigma_i(k))u_i(k) + \sum_{j\neq i}(\Gamma_{xij}(j)x_j(k) + \Gamma_{uij}(j)u_j(k)) \tag{3.76}$$

with (3.8) defined accordingly.

We consider a *local* mode-dependent decentralized state-feedback of the form:

$$u_i(k) = K_i(\sigma_i(k))x_i(k) \tag{3.77}$$

We define the global Markov state $\sigma(k) = (\sigma_1(k) \dots \sigma_N(k))$. The transition matrix for the

augmented state can be computed as: $\Lambda = \bigotimes_{i=1}^{N} \Lambda_i$, where $\Lambda_i$ is the transition matrix of $\sigma_i(k)$ and $\otimes$ denotes the Kronecker product. Note that if we consider the large-scale system as a whole, then the $i^{\text{th}}$ local controller (3.77) observes the *cluster* of states $\mathscr{C}_{iq}$ defined as: $\mathscr{C}_{iq} = \{(\sigma_1, .., \sigma_N) : \sigma_i(k) = q\}$, thus $(\sigma_1(k) \dots \sigma_N(k))$ are considered as one cluster for a certain $\sigma_i(k)$.

**Corollary 3.3** (a) The large-scale system $\mathscr{S}$ is quadratically stochastically stabilizable with guaranteed cost via decentralized local mode-dependent feedback (3.77) if it satisfies LMIs (3.54), (3.54) with the equality constraints:

$$Q_{ij} = Q_{iq}, S_{ij\ell} = S_{iq\ell}, Y_{ij} = Y_{iq}, R_{ij} = R_{iq}, \tag{3.78}$$

when $j \in \mathscr{C}_{iq}, q = 1, ..., M_i$. The local-mode dependent controller is given by: $K_{iq} = Y_{iq} Q_{iq}^{-1}$.

(b) If the problem in part (a) is feasible, then the optimal worst-case performance (3.46) achievable via (3.77) can be upper bounded by solving the semi-definite program (3.56) subject to (3.54), (3.57) and (3.78).

If we have also the advantage that state-space of the local subsystems is invariant in each cluster, as in the case of the networked control system discussed before, this enables us to state the following result:

**Corollary 3.4** (a) The large-scale system $\mathscr{S}$ is quadratically stochastically stabilizable with guaranteed cost via decentralized local mode-dependent feedback (3.77) if there exist symmetric matrices $\{Q_{iq}\}, \{S_{iq\ell}\}$, matrices $\{Y_{iq}\}, \{R_{iq}\}$ and constants $\{\tau_i\}$, $i = 1, .., N$, $q, \ell = 1, ..., M_i$, satisfying the LMIs:

$$\left[\begin{array}{cc|ccc} Q_{iq} & \bullet & \bullet & \bullet & \bullet \\ 0 & \tau_i I & \bullet & \bullet & \bullet \\ \hline A_{iq}Q_{iq} + B_{iq}Y_{iq} & \tau_i E_{ij} & R_{iq} + R_{iq}^T - \bar{S}_{iq} & \bullet & \bullet \\ C_q Q_q + D_{iq} Y_{iq} & 0 & 0 & I & \bullet \\ \tilde{H}_{iq}Q_{iq} + \tilde{G}_{iq}Q_{iq} & 0 & 0 & 0 & \tilde{I}_i \end{array}\right] > 0 \tag{3.79}$$

and

$$\begin{bmatrix} S_{iq\ell} & R_{iq}^T \\ R_{iq} & Q_{i\ell_i} \end{bmatrix} > 0 \tag{3.80}$$

Furthermore, the corresponding mode-dependent control gain is given by:

$$K_{iq} = Y_{iq} Q_{iq}^{-1} \tag{3.81}$$

(b) If the problem in part (a) is feasible, then via solving the following semi-definite program:

$$\text{minimize} \sum_{i=1}^{N} a_i \tag{3.82}$$

subject to (3.53), (3.54) and

$$\begin{bmatrix} a_i & \bullet \\ X_i & \tilde{Q}_i \end{bmatrix} > 0 \tag{3.83}$$

where $X_i = [\sqrt{\lambda_{i1}} x_i(0) \ ... \ \sqrt{\lambda_{iN}} x_i(0)]$, and $\tilde{Q}_i = \text{diag}[Q_{i1} \ ... \ Q_{iM_i}]$, the optimal worst-case performance (3.46) achievable via (3.45) can be upper bounded as in (3.58).

***Proof:*** To establish that (3.53) and (3.54) hold, we define $Q_{ij} = Q_{iq}$ for all $j \in \mathscr{C}_{iq}$. Notice that we can convert the dependence on $q$ to $j$ in all variables since we have invariant dynamics of $\mathscr{S}_i$ under the $i^{\text{th}}$ cluster. ■

**Remark 3.2** Note that Corollary 3.4, when applicable, gives us a clear computational advantage over Theorem 3.3, since the number of matrix inequalities is $N \sum_{i=1}^{N} M_i$ and $N \prod_{i=1}^{N} M_i$, respectively.

## 3.5 Examples and Simulation

### 3.5.1 Example I: Local-mode dependent $\mathscr{H}_\infty$ design for a DNCS

In this example, we apply the results to the design of local mode-dependent decentralized controllers for a large-scale system controlled over communication channels vulnerable to packet-losses in the system-control channel only.

We have three subsystems. For every subsystem, the two states transmitted to the controller are sent over sperate channels. Hence, every local Markov state belong to the set $\{11, 10, 01, 00\}$, where "0" denotes failure and "1" denotes success. The symbol "10" denotes success in the first state transmission, and failure in the second state transmission.

The system matrices, where the Markovian switching occurs in the $B$-matrix only according to our formulation, are[4]:

[4]The results were verified with respect to a large set of randomly generated matrices which were constructed such that the open-loop system is unstable. The presented examples are only selected ones. We didn't use examples from the literature since this problem wasn't treated before, and we couldn't find benchmark examples that fit to our setup.

$$A_1 = \begin{bmatrix} 1.061 & -0.05331 \\ 0.05306 & 0.9546 \end{bmatrix}, A_2 = \begin{bmatrix} 1.159 & -0.03001 \\ 0.2154 & 1.014 \end{bmatrix}, A_3 = \begin{bmatrix} 0.67556 & -2.8530 \\ 0.4773 & -0.3962 \end{bmatrix},$$

$$B_1 = \begin{bmatrix} -0.0828 \\ 0.7397 \end{bmatrix}, B_2 = \begin{bmatrix} 0.4698 \\ 0.3746 \end{bmatrix}, B_3 = \begin{bmatrix} -0.4052 \\ -0.9017 \end{bmatrix}, E_1 = \begin{bmatrix} 0.2171 \\ -0.1178 \end{bmatrix}, E_2 = \begin{bmatrix} -0.1539 \\ -0.167 \end{bmatrix},$$

$$E_3 = \begin{bmatrix} 0.1545 \\ 0.1201 \end{bmatrix}, C_1 = \begin{bmatrix} -0.6794 & -0.5242 \\ 0.7457 & 0.2917 \\ 0.0 & 0.0 \end{bmatrix}, C_2 = \begin{bmatrix} -0.6888 & -0.1551 \\ -0.6178 & 0.712 \\ 0.0 & 0.0 \end{bmatrix},$$

$$C_3 = \begin{bmatrix} 0.9660 & -0.1999 \\ 0.1053 & -0.6024 \\ 0.0 & 0.0 \end{bmatrix}, H_1 = \begin{bmatrix} 0.4669 \\ 0.1649 \end{bmatrix}^T, H_2 = \begin{bmatrix} 0.3564 \\ 0.3159 \end{bmatrix}^T,$$

$$H_3 = \begin{bmatrix} 0.2504 \\ 0.4667 \end{bmatrix}^T, F_1 = \begin{bmatrix} 0.006921 \\ 0.01318 \end{bmatrix}, F_2 = \begin{bmatrix} -0.02656 \\ 0.004878 \end{bmatrix}, F_3 = \begin{bmatrix} 0.04316 \\ -0.01648 \end{bmatrix}$$

, $G_1 = G_2 = G_3 = 0$, and $D_1 = D_2 = D_3 = 1^T$. The transition matrices are:

$$\Lambda_1 = \begin{bmatrix} 0.1140 & 0.186 & 0.266 & 0.434 \\ 0.09 & 0.21 & 0.21 & 0.49 \\ 0.152 & 0.248 & 0.228 & 0.372 \\ 0.12 & 0.28 & 0.18 & 0.42 \end{bmatrix}, \Lambda_2 = \begin{bmatrix} 0.0700 & 0.13 & 0.28 & 0.52 \\ 0.102 & 0.098 & 0.408 & 0.392 \\ 0.203 & 0.377 & 0.147 & 0.273 \\ 0.2958 & 0.2842 & 0.2142 & 0.2058 \end{bmatrix}$$

$$\Lambda_3 = \begin{bmatrix} 0.1170 & 0.1830 & 0.2730 & 0.427 \\ 0.084 & 0.216 & 0.196 & 0.504 \\ 0.1482 & 0.2318 & 0.2418 & 0.3782 \\ 0.1064 & 0.2736 & 0.1736 & 0.4464 \end{bmatrix}$$

with initial conditions $x_1(0) = [0.5 \quad -1]^T, x_2(0) = [1 \quad -1]^T, x_3(0) = [1 \quad -0.5]^T$, and $\sigma_1(0) = \sigma_2(0) = \sigma_3(0) = 00$.

The open loop system is unstable. Corollary 3.2 was used successfully to design a stabilizing control which is robust with respect to admissible uncertainties and disturbances. The designed controller gains are:

$$K_{11} = \begin{bmatrix} 4.598 & -1.007 \end{bmatrix}, K_{12} = \begin{bmatrix} 10.74 & -1.470 \end{bmatrix}, K_{13} = \begin{bmatrix} 3.719 & -1.371 \end{bmatrix},$$

$$K_{21} = \begin{bmatrix} -1.941 & -0.6877 \end{bmatrix}, K_{22} = \begin{bmatrix} -2.605 & -0.7204 \end{bmatrix}, K_{23} = \begin{bmatrix} -3.437 & -2.425 \end{bmatrix},$$

$$K_{31} = \begin{bmatrix} 0.4534 & -0.002863 \end{bmatrix}, K_{32} = \begin{bmatrix} 0.2453 & -5.624 \end{bmatrix}, K_{33} = \begin{bmatrix} 0.3824 & 0.1786 \end{bmatrix},$$

and the rest of gains are zeros. Also, $\tau_1 = 0.008700, \tau_2 = 0.054671, \tau_3 = 0.01635$. The optimal $\mathscr{H}_\infty$ norm was found to be $\gamma^* = 2.32078$. Figure 3.3 shows a sample trajectory for the closed-loop system with Markovian controller versus a deterministic controller design without the consideration of the switching behavior. The disturbance signal was $w_1(k) = 1.5a_1 \sin(3k), w_2(k) = 1.5a_2 \sin(3k), w_3(k) = 1.5a_3 \sin(3k)$, where $a_1, a_2, a_3$ are independent normally distributed random variables. It is seen that the deterministic controller could not stabilize the system with packet-losses, interactions, and disturbance. Figure 3.4 show the corresponding packet-loss switching signals. The disturbance attenuation level was verified by generating thousands of disturbance signals, and the maximum obtained $\ell_2$-gain was found to be 0.7418 which is less than the designed value.

We study the effect of the packet-loss rates on the stability and the performance of the previous system. Since there are 12 probability parameters, we fix some of them to show the effect of the rest. Figure 3.5-a depicts the $\mathscr{H}_\infty$ norm versus the failure rate for each of six channels which are assumed to be Bernoulli type. The curve $\Lambda_{11}$, for example, is computed by assuming that $\Lambda_{11}$ represents a Bernoulli channel with failure probability $\pi$, the second channel in subsystem 1 is off, and the other subsystems channels are operating without failures. The curve $\Lambda_i = \Lambda$ represents the case where all channels are Bernoulli type and identically distributed. It is seen that sensitivity of the $\mathscr{H}_\infty$ norm on the failure probability varies per channel. Note that there is no curve corresponding to $\Lambda_{22}$ because there is the system could not be stabilized in that case. The reason is that the pair $(A_2, B_{22})$ isn't controllable.

Figure 3.5-b shows the case when the six channels are identically distributed Markovian channels with failure rate $\pi_f$ and recovery rate $\pi_r$. The figure shows an interesting and nonintuitive fact that for a fixed recovery probability $\pi_r$, the $\mathscr{H}_\infty$ norm is almost not affected by the failure probability $\pi_f$. A similar observation was made in Geromel et al. (2009).

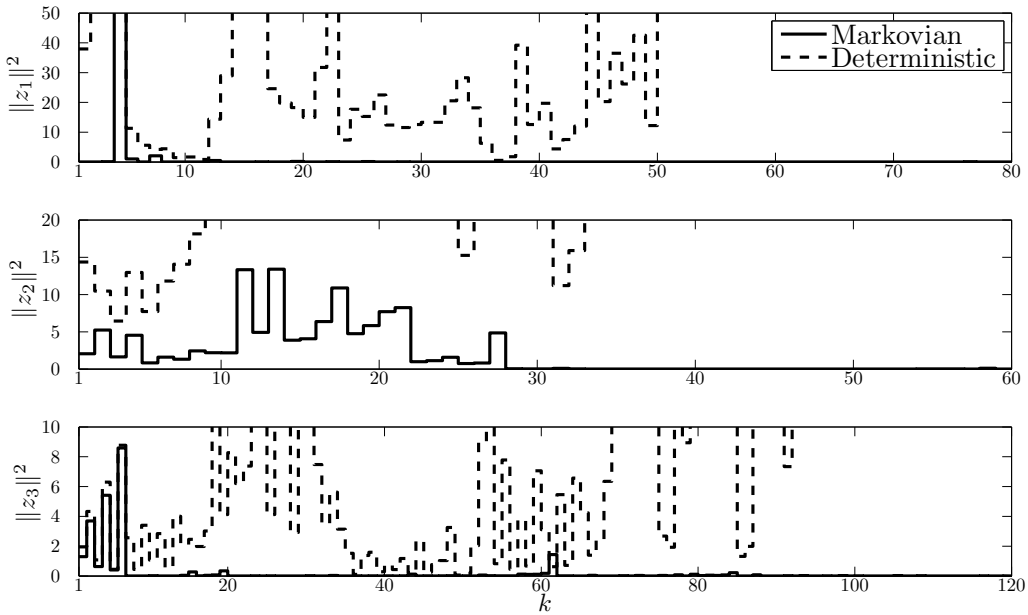


Figure 3.3: Sample state trajectories of networked large-scale control system in Example I.

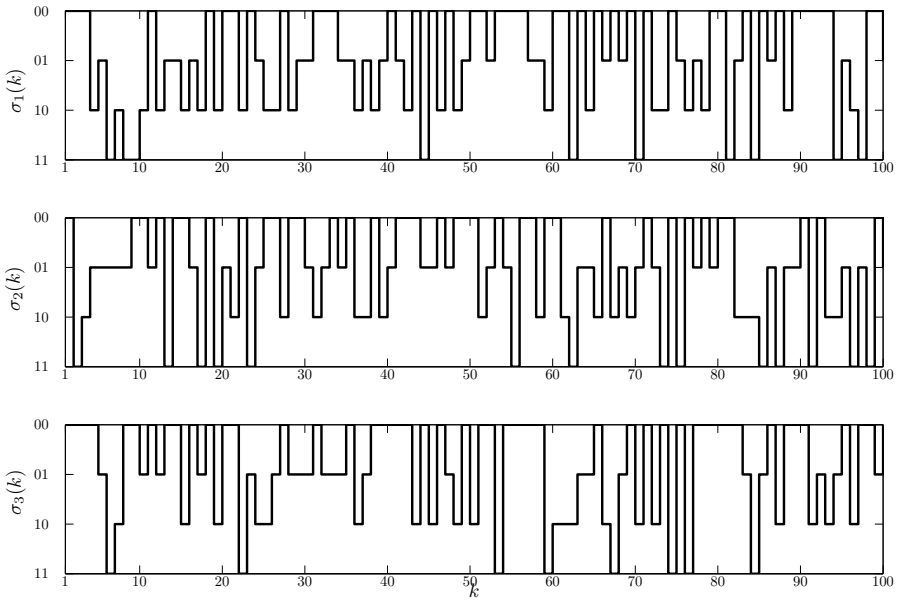


Figure 3.4: Sample packet-loss Markovian switching signal in the networked large-scale system in Example I. Note that '00' denotes complete failure, while '11' denotes complete success.

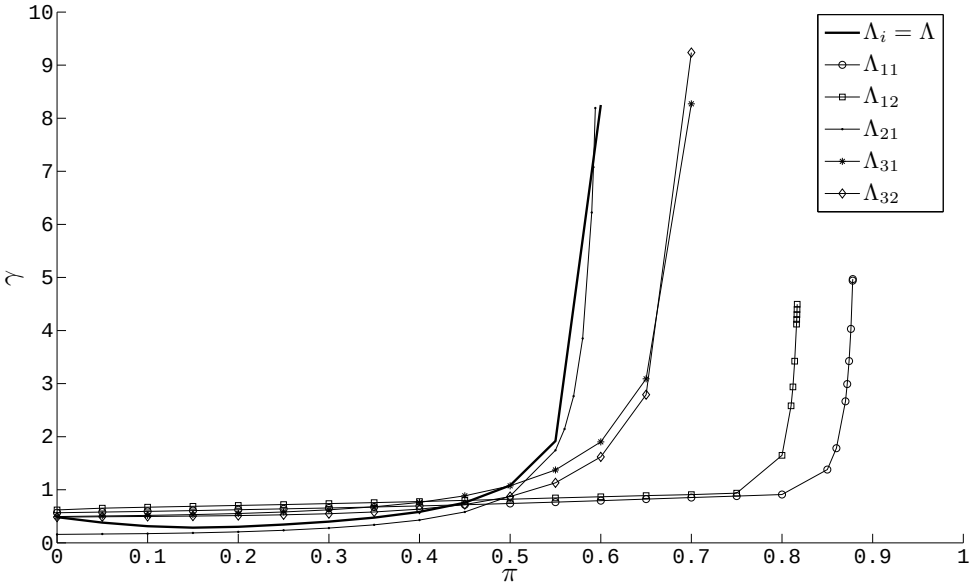


(a)

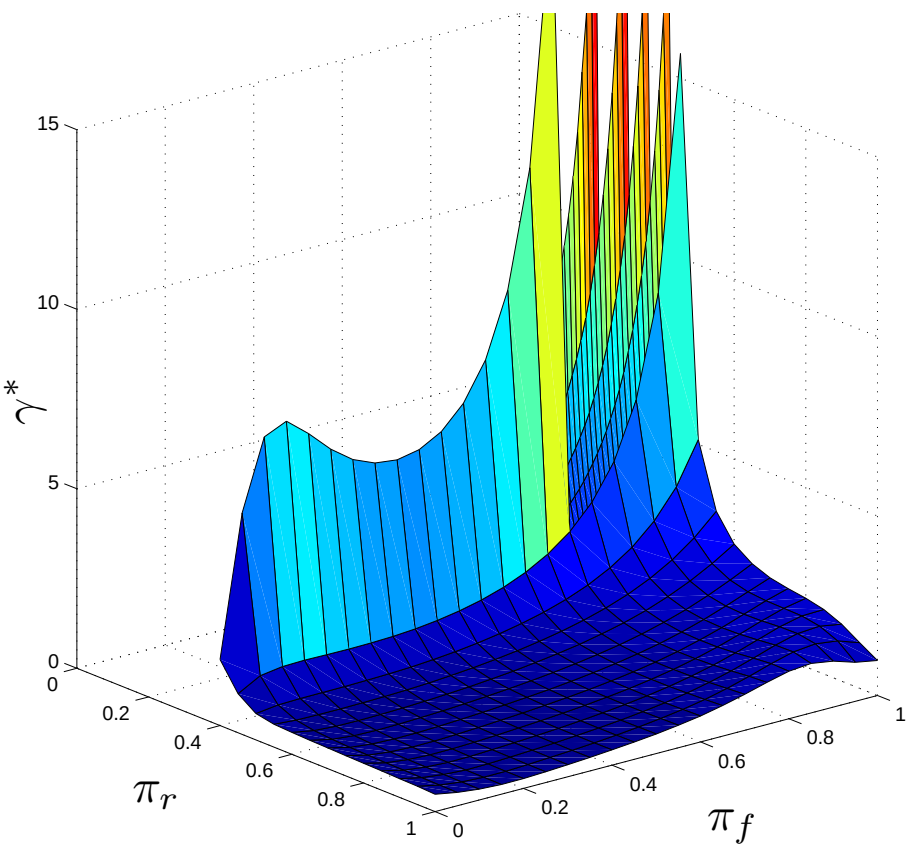


(b)

Figure 3.5: (a) The $\mathscr{H}_\infty$ norm versus the probability of failure. (b) The $\mathscr{H}_\infty$ norm versus the probabilities of failure and recovery.

### 3.5.2 Example II: Local-mode dependent Guaranteed Cost design for a DNCS

In this example, we apply the theory we developed to the design of local mode-dependent decentralized controllers for a large-scale system controlled over a communication channels vulnerable to packet-losses in the system-control channel only.

We have three subsystems. For every subsystem, the two states transmitted to the controller are sent over sperate channels. Hence, every local Markov state belongs to the set $\{11, 10, 01, 00\}$, where "0" denotes failure and "1" denotes success. The symbol "10" denotes success in the first state transmission, and failure in the second state transmission.

The system matrices and the transition matrices are the same as the example in the previous section with $W_i = C_i^T C_i, V_i = 1$. The initial conditions are $x_1(0) = [0.2 \ \ -0.2]^T, x_2(0) = [0.1 \ \ -0.3]^T, x_3(0) = [0.1 \ \ -0.1]^T$ , $\sigma_1(0) = \sigma_2(0) = \sigma_3(0) = 00$, and uniform initial distributions.

The open loop systems are unstable. Corollary 3.4 was used successfully to design a stabilizing control which is robust with respect to admissible uncertainties. The designed controller gains are:

$$
\begin{aligned}
&K_{11} = \begin{bmatrix} 4.051 & -0.9841 \end{bmatrix}, K_{12} = \begin{bmatrix} 8.898 & -1.236 \end{bmatrix}, K_{13} = \begin{bmatrix} 3.033 & -1.254 \end{bmatrix}, \\
&K_{21} = \begin{bmatrix} -1.925 & -0.6940 \end{bmatrix}, K_{22} = \begin{bmatrix} -2.577 & -0.7084 \end{bmatrix}, \\
&K_{23} = \begin{bmatrix} -3.108 & -2.306 \end{bmatrix}, K_{31} = \begin{bmatrix} 0.4649 & -0.07266 \end{bmatrix}, \\
&K_{32} = \begin{bmatrix} 0.3612 & -5.542 \end{bmatrix}, K_{33} = \begin{bmatrix} 0.3971 & 0.1144 \end{bmatrix},
\end{aligned}
$$

and $K_{14} = K_{24} = K_{34} = \begin{bmatrix} 0 & 0 \end{bmatrix}$, with $\tau_1 = 0.0132, \tau_2 = 0.0859, \tau_3 = 0.0403$. The guaranteed cost is $J \leq 19.4227$. To compare this with the non-switching case, we computed that guaranteed cost in that case and it was 5.2104, which demonstrates the significant effect of the Markovian switching on the performance. Figure 3.6 shows a comparison between the trajectory of the closed-loop system in the cases of Markovian and deterministic controllers. Figure 3.7 shows the corresponding packet-loss switching signal. Figure 3.8 shows the running cost comparison between the Markovian and deterministic controllers. Note that the Markovian controller achieves a cost far below the upper bound.

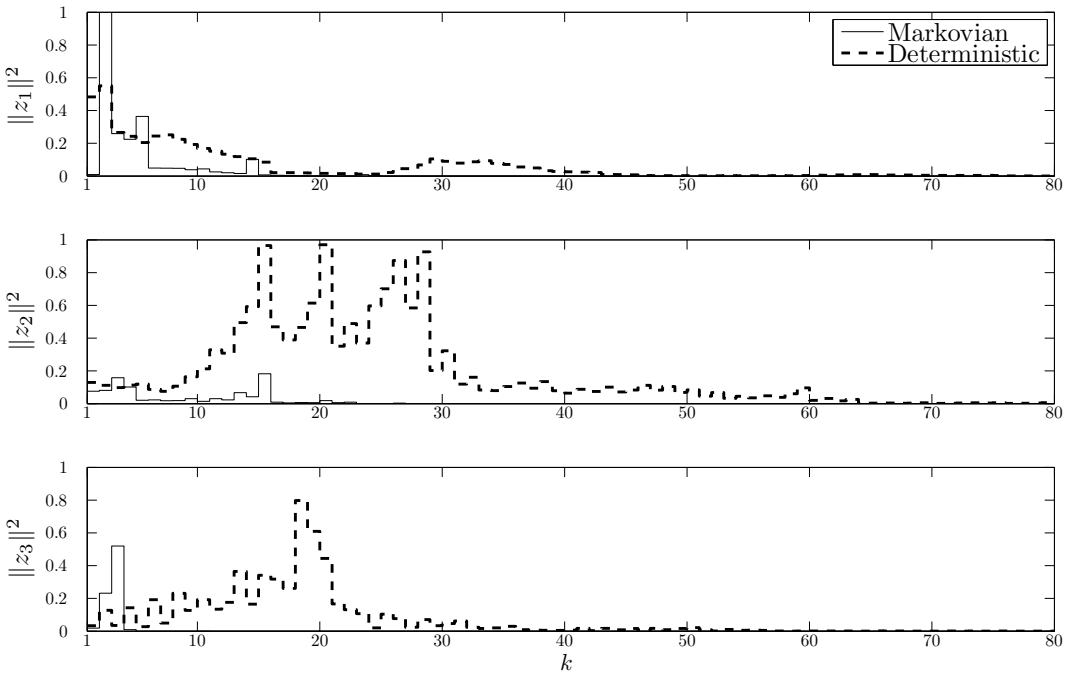


Figure 3.6: Sample trajectories for cost variable of networked large-scale control system in Example II.

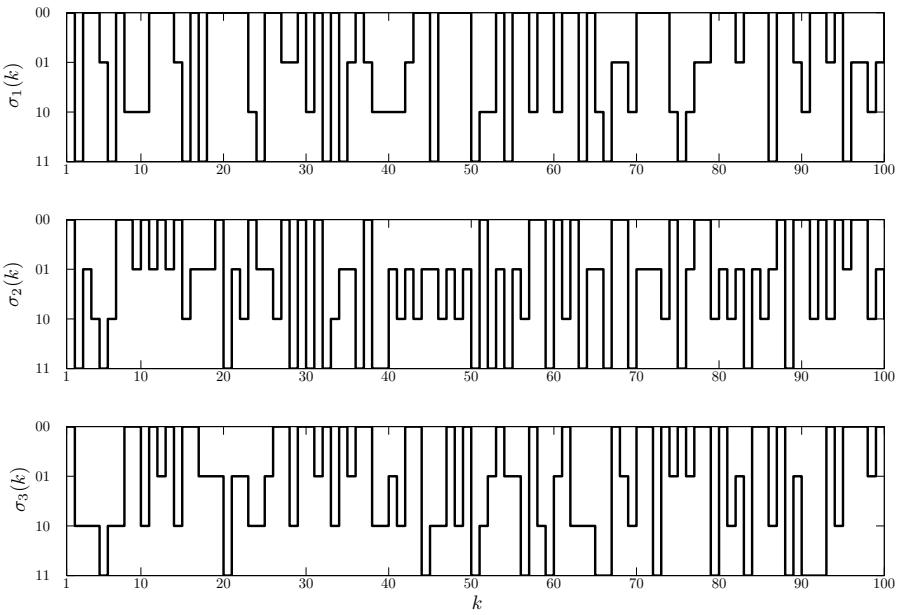


Figure 3.7: Packet-loss Markovian switching signal in the networked large-scale system in Example II.

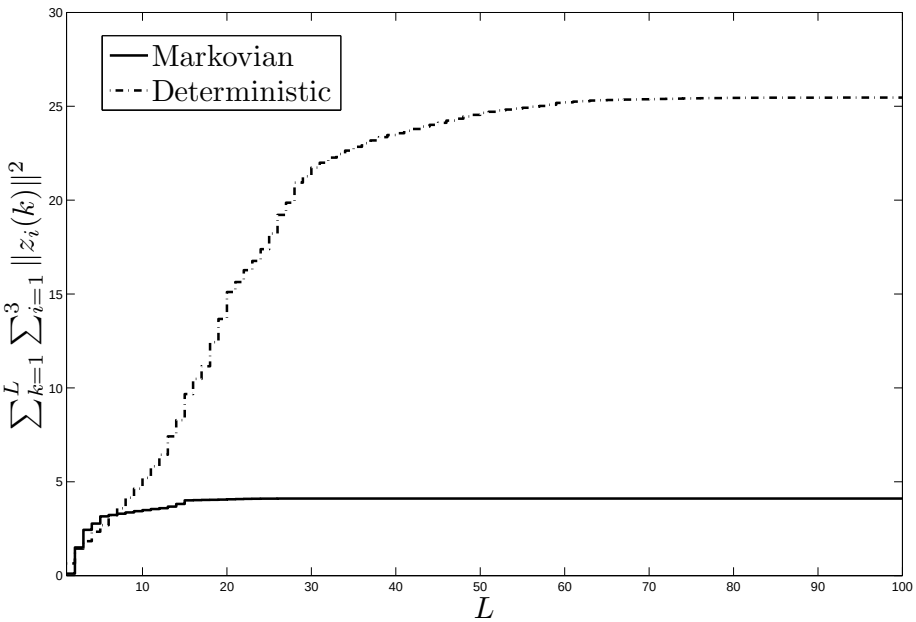


Figure 3.8: The running quadratic cost of the closed-loop large-scale with Markovian and deterministic controllers. Note that $L$ denotes the time.

## 3.6 Conclusions and Future Work

In this chapter, we have considered both the problems of decentralized state-feedback $\mathscr{H}_\infty$ control of interconnected control systems with packet losses, and the corresponding problem of guaranteed cost control design. The system was modeled as an interconnected DMJLS with norm-bounded interactions. We provided necessary and sufficient LMI conditions for the synthesis of controllers, and we have extended the results to local mode-dependent controllers.

The generalization of the results to the cases of output feedback and filtering will be considered in the next chapter. For networked control systems, we can consider more sophisticated models of NCS that handle the packet-losses more efficiently. Also, time-delays, that are common to NCS, can be incorporated to the problem.

Our results can be extended easily to accommodate norm-bounded uncertainties in the subsystems' matrices. Furthermore, the uncertainty structure can be made richer by considering sum-quadratic constraints instead of norm-bounded uncertainties where the corresponding stability notion used in this case is called Absolute stability (Moheimani et al., 1995).

# 4 Chapter

# Decentralized Output-Feedback Control With Packet Losses

## 4.1 Introduction

We consider the problem of decentralized output control over communication networks in this chapter. Specifically, a large-scale system decomposable into $N$ discrete-time linear time-invariant subsystems with norm-bounded interconnections is considered. A decentralized controller is to be designed provided that it communicates with system over a network with multiple packet-losses. Assuming that losses follow a Gilbert-Elliot model, a formulation with Markovian jumping parameters can be applied. Global mode-dependent output-feedback decentralized control laws that robustly stabilize the large-scale system against uncertain interconnections while satisfying a performance criteria are provided in terms of necessary and sufficient rank-constrained linear matrix inequality conditions. The performance criteria considered are guaranteeing an $\mathscr{H}_\infty$ disturbance attenuation level, and guaranteeing a worst-case average quadratic cost. Similar results are developed for local mode-dependent controllers which are advantageous as mentioned in the previous chapter. The results are illustrated with with an example, where cone-complementarity linearization algorithm was used for handling the rank constraints.

To the best of our knowledge, the problem of decentralized control of DMJLSs has not been investigated yet, which is in contrast to the continuous-time variant, see for example Li et al. (2007) and the references therein. Furthermore, this is the first work that considers the synthesis of *decentralized*, in contrast to distributed, control laws for large-systems with stochastic packet-losses.

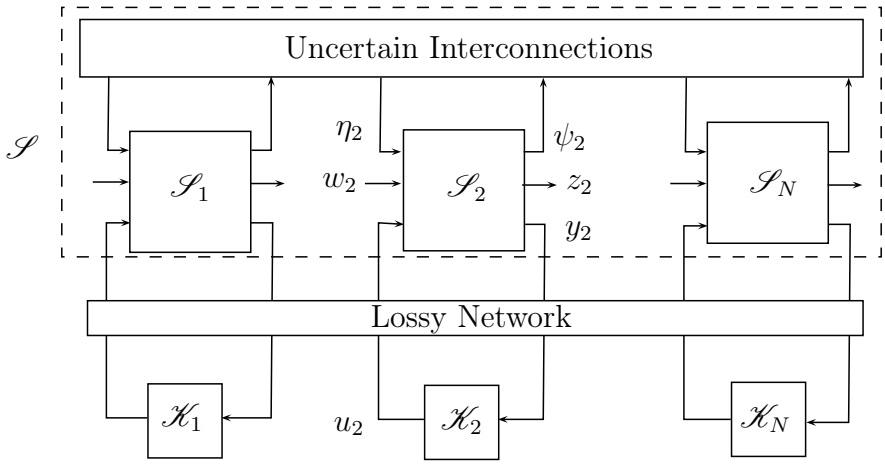


Figure 4.1: General Block diagram of the decentralized NCS with output feedback and disturbance input.

## 4.2 Interconnected Networked Control Systems with Packet Losses

Consider Figure 4.1, let $\mathscr{S}$ be composed of the subsystems $\mathscr{S}_i$ be described as [1]:

$$x_i(k+1) = A_i x(k) + B_i u_i(k) + F_i w_i(k) + \textstyle\sum_{\nu \neq i} \Gamma_{xi\nu}(k) x_\nu(k) \tag{4.1}$$

$$z_i(k) = C_i x_i(k) + D_i u_i(k) \tag{4.2}$$

$$y_i(k) = G_i x_i(k) + L_i w_i(k) + \textstyle\sum_{\nu \neq i} \Gamma_{yi\nu}(k) x_\nu(k) \tag{4.3}$$

where $x_i \in \mathbb{R}^{n_i}$, $u_i \in \mathbb{R}^{m_i}$,$y_i \in \mathbb{R}^{o_i}$,$w_i \in \mathbb{R}^{\rho_i}$ and $z_i \in \mathbb{R}^{v_i}$ are local state, input, measured output, disturbance and regulated variables, respectively.The interaction matrices $\Gamma_{xij}, \Gamma_{yij}(k)$ are structured as:

$$[\Gamma_{xij}(k) \;\; \Gamma_{yij}(k)] = [E_i \;\; K_i]\Delta_{ij}(k) H_j \tag{4.4}$$

where $\Delta_{ij} \in \mathbb{R}^{r \times s}$ are time-varying and known only to satisfy the norm-bound:

$$\sum_{\nu \neq i} \Delta_{i\nu}(k) \Delta_{i\nu}^T(k) \leq I.$$

We use the notation $\eta_i(k) = \sum_{\nu \neq i} \Delta_{i\nu}(k) H_\nu x_\nu(k)$. Note that the disturbance and the regulated variable are associated only with a disturbance attenuation problem which will be considered in the next section. In the section after it, we consider the problem of guaranteeing a certain bound on a quadratic cost in which there is no external disturbance.

[1] An input interaction term can be added easily, however, we proceed without it to simplify the equations.

As in Figure 4.1, we can have packet-drops in both of the forward and backward channels, or in only one of them. Each forward channel is assumed to consist of $n_i$ independent communication channels where $n_i$-subsystem's states are sent separately to local controllers, similarly the $m_i$ control signals are assumed to be sent over sperate channels.[2]. Each communication channel is assumed to be a stochastic switch which is described by a two-state Markov chains $\theta_{ij}(k), \varphi_{i\ell}(k) \in \{0,1\}$, $j = 1,..,n_i, \ell = 1,..,m_i$, with the failure rate: $\pi_f = \Pr(\theta_{ij}(k) = 0|\theta_{ij}(k-1) = 1)$, and the recovery rate: $\pi_r = \Pr(\theta_{ij}(k) = 1|\theta_{ij}(k-1) = 0)$. This model is called the *Gilbert-Elliot erasure model*. The special case when $\pi_r = 1 - \pi_f$ is called *Bernoulli erasure model*.

We consider two possible ways of handling packet losses:

1. *Zeroing the Packet:* if a packet is lost, it is assumed to be zero. This assumption enables us to design the controllers with advantage of no extra dynamics in the controller. Assume the we have $\kappa_i$ communication channels per subsystem, which means that augmented Markov chain $\sigma_i(k)$ has $M_i = 2^{\kappa_i}$ states. As a result, each subsystem can be written as a discrete-time Markovian jump system (DMJLS):

$$x_i(k+1) = A_i x_i(k) + \bar{B}_i(\sigma_i(k))u(k) + E_i\eta_i(k) + F_i w_i(k) \tag{4.5}$$
$$z_i(k) = C_i x_i(k) + D_i u_i(k) \tag{4.6}$$
$$y_i(k) = \bar{G}_i(\sigma_i(k))x_i(k) + \bar{L}_i(\sigma_i(k))w_i(k) + \bar{K}_i(\sigma_i(k))\eta_i(k) \tag{4.7}$$

where $\bar{B}_i(\sigma_i(k)) = B_i\Phi_i(\sigma_i(k)), \bar{G}(\sigma_i(k)) = \Theta_i(\sigma_i(k))G_i, \bar{L}(\sigma_i(k)) = \Theta_i(\sigma_i(k))L_i, \bar{K}(\sigma_i(k)) = \Theta_i(\sigma_i(k))K_i$, $\Theta_i = \mathrm{diag}[\theta_{i1}...\theta_{1n_i}]$, $\Phi_i = \mathrm{diag}[\varphi_{i1}...\varphi_{1m_i}]$.

2. *Holding the Packet:* If a packet is lost, then we replace it by the previous packet. We consider the augmented dynamics with the state $v_i(k) = [x_i^T(k) \;\; \tilde{y}_i^T(k-1) \;\; \tilde{u}_i^T(k-1)]^T$:

$$v_i(k+1) = \bar{A}_i(\sigma_k)v_i(k) + \bar{B}_i(\sigma_k)u_i(k) + \bar{F}_i(\sigma_k)w_i(k) + \bar{E}_i(\sigma_i(k))\eta_i(k) \tag{4.8}$$
$$z_i(k) = [C_i \;\; 0 \;\; 0]v_i(k) + D_i u_i(k) \tag{4.9}$$
$$y_i(k) = \bar{G}_i(\sigma_i(k))v_i(k) + \Theta_i(\sigma_i(k))L_i w_i(k) + \Theta_i(\sigma_i(k))K_i\eta_i(k) \tag{4.10}$$

where

$$\bar{A}_i(\sigma_i(k)) = \begin{bmatrix} A_i & 0 & B_i(I - \Phi_i(\sigma_i(k))) \\ \Theta_i(\sigma_i(k))G_i & I - \Theta_i(\sigma_i(k)) & 0 \\ 0 & 0 & I - \Phi_i(\sigma_i(k)) \end{bmatrix}, \bar{B}_i(\sigma_i(k)) = \begin{bmatrix} B_i\Phi_i(\sigma_i(k)) \\ 0 \\ \Phi_i(\sigma_i(k)) \end{bmatrix},$$

[2]The formulation applies easily to the case of states and inputs grouped into fewer number of channels, or packet-losses occurring in only of the forward and backward channels.

$$\bar{F}_i(\sigma_i(k)) = \begin{bmatrix} F_i \\ \Theta_i(\sigma_i(k))L_i \\ 0 \end{bmatrix}, \bar{E}_i(\sigma_i(k)) = \begin{bmatrix} E_i \\ \Theta_i(\sigma_i(k))K_i \\ 0 \end{bmatrix}, \bar{G}_i(\sigma_i(k)) = \begin{bmatrix} G_i^T\Theta_i(\sigma_i(k)) \\ I - \Theta_i(\sigma_i(k)) \\ 0 \end{bmatrix}^T$$

Note that we have formulated the problem in both ways as a DMJLS problem. Therefore, we will formulate the decentralized control of DMJLS in the next section. The local mode-dependent control, to be developed later, will be applied to the presented NCS system.

## 4.3 Decentralized $\mathscr{H}_\infty$ Output Feedback Controller Synthesis

### 4.3.1 $\mathscr{H}_\infty$ Problem Formulation

Consider a large-scale system $\mathscr{S}$ composed of $N$ interconnected discrete-time Markovian jump linear subsystems $\{\mathscr{S}_i\}_{i=1}^N$. The subsystem $\mathscr{S}_i$ is given as:

$$x_i(k+1) = A_i(\sigma_k)x_i(k) + B_i(\sigma_k)u_i(k) + F_i(\sigma_k)w_i(k) + \textstyle\sum_{\nu\neq i}\Gamma_{xi\nu}(k)x_\nu(k) \tag{4.11}$$

$$z_i(k) = C_i(\sigma_k)x_i(k) + D_i(\sigma_k)u_i(k) \tag{4.12}$$

$$y_i(k) = G_i(\sigma_k)x_i(k) + L_i(\sigma_k)w_i(k) + \textstyle\sum_{\nu\neq i}\Gamma_{yi\nu}(\nu)x_\nu(k) \tag{4.13}$$

where $x_i \in \mathbb{R}^{n_i}$, $u_i \in \mathbb{R}^{m_i}$,$y_i \in \mathbb{R}^{o_i}$,$w_i \in \mathbb{R}^{\rho_i}$ and $z_i \in \mathbb{R}^{v_i}$ are local state, input, measured output, disturbance and regulated variables, respectively. The interaction matrices $\Gamma_{xij}(k), \Gamma_{yij}(k)$ are structured as:

$$[\Gamma_{xij}(k) \;\; \Gamma_{yij}(k)] = [E_i(\sigma_k) \;\; K_i(\sigma_k)]\Delta_{ij}(k)H_j(\sigma_k) \tag{4.14}$$

where $\Delta_{ij} \in \mathbb{R}^{r\times s}$ are time-varying and known only to satisfy the norm-bound:

$$\sum_{\nu\neq i}\Delta_{i\nu}(k)\Delta_{i\nu}^T(k) \leq I \tag{4.15}$$

Note that if we use the terminology that $\eta_i(k) = \sum_{\nu\neq i}\Delta_{i\nu}(k)H_\nu(\sigma_k)x_\nu(k)$ is an interaction signal, then the above bound is equivalent to

$$\|\eta_i(k)\|^2 \leq \sum_{\nu\neq i}\|\psi_\nu(k)\|_2^2 = \sum_{\nu\neq i}\|H_\nu(\sigma_k)x_\nu(k)\|_2^2 \tag{4.16}$$

If an interaction signal $\eta_i(k) \in \ell_2$ satisfy the above bound, it is said to be *admissible*. The

set of all admissible interaction signals for $\mathscr{S}$ is denoted by $\Xi$.

The Markov chain $\sigma_k \in \{1, .., M\}$ is a sequence of random variables with the following transition probabilities: $\pi_{ij} = \Pr[\sigma_{k+1} = i | \sigma_k = j]$.

The mode-dependent decentralized dynamic output-feedback has the form:

$$\xi_i(k+1) = \tilde{A}_i(\sigma_k)\xi_i(k) + \tilde{B}_i(\sigma_k)y_i(k) \tag{4.17}$$

$$u_i(k) = \tilde{C}_i(\sigma_k)\xi_i(k) + \tilde{D}_i(\sigma_k)y_i(k) \tag{4.18}$$

We assume that

1. The pairs $(A_i(\sigma_k), B_i(\sigma_k)), i = 1, ..., N$ are stochastically stabilizable (Ji et al., 1991, Costa et al., 2005).

2. The pairs $(A_i(\sigma_k), G_i(\sigma_k)), i = 1, ..., N$ are stochastically detectable (Costa et al., 2005).

We consider the problem of decentralized quadratic stabilization with disturbance attenuation via output feedback control:

**Definition 4.1** The large-scale system $\mathscr{S}$ composed of subsystems $\{\mathscr{S}_i\}$ (4.11) with (4.16) is said to be quadratically stochastically stabilizable with disturbance attenuation level $\gamma > 0$ via decentralized dynamic output feedback (4.17) if there exists $\{\tilde{A}_{ij}\}, \{\tilde{B}_{ij}\}, \{\tilde{C}_{ij}\}, \{\tilde{D}_{ij}\}$ such that the closed-loop large-scale system $\mathscr{S}_c$ is quadratically stable and $\|\mathscr{S}_{c,zw}\|_\infty < \gamma$ for all $\eta \in \Xi$.

The $\mathscr{H}_\infty$ -norm of a DMJLS was defined in Definition 2.7.

Our approach will be to convert the problem into local $\mathscr{H}_\infty$ control problems for the subsystems with scaling parameters for the interconnections. Therefore, we define the following scaled subsystems: Let $\{\tau_i\} > 0$ be given, define the following auxiliary subsystem:

$$x_i(k+1) = A_i(\sigma_k)x_i(k) + B_i(\sigma_k)u_i(k) + \sqrt{\tau_i}E_i(\sigma_k)\bar{\eta}_i(k) + \gamma^{-1}F_i(\sigma_k)\bar{w}_i(k) \tag{4.19}$$

$$\bar{z}_i(k) = \bar{C}_i(\sigma_k)x_i(k) + \bar{D}(\sigma_k)u_i(k) \tag{4.20}$$

where $\bar{C}_{ij} = \begin{bmatrix} C_{ij}^T & \left(\sum_{\nu \neq i} \tau_\nu^{-1}\right)^{1/2} H_{ij}^T \end{bmatrix}^T$, $\bar{D}_{ij} = \begin{bmatrix} D_{ij}^T & 0 \end{bmatrix}^T$.

After applying controller (4.17) to the system (4.19), we get the closed-loop subsystem:

$$\zeta_i(k+1) = \hat{A}_i(\sigma_k)\zeta_i(k) + \sqrt{\tau_i}\hat{E}_i(\sigma_k)\bar{\eta}_i(k) + \gamma^{-1}\hat{F}_i(\sigma_k)\bar{w}_i(k) \tag{4.21}$$

$$\bar{z}_i(k) = \begin{bmatrix} \hat{C}_i(\sigma_k) \\ \hat{H}_i(\sigma_k) \end{bmatrix} \zeta_i(k) + \sqrt{\tau_i} \begin{bmatrix} \hat{J}_i(\sigma_k) \\ 0 \end{bmatrix} \bar{\eta}_i(k) + \gamma^{-1} \begin{bmatrix} \hat{D}_i(\sigma_k) \\ 0 \end{bmatrix} \bar{w}_i(k)$$

where $\zeta_i = [x_i^T \ \xi_i^T]^T$, $\hat{J}_{ij} = D_{ij}\tilde{D}_{ij}K_{ij}$, $\hat{D}_{ij} = D_{ij}\tilde{D}_{ij}L_{ij}$,

$$\hat{A}_{ij} = \begin{bmatrix} A_{ij} + B_{ij}\tilde{D}_{ij}G_{ij} & B_{ij}\tilde{C}_{ij} \\ \tilde{B}_{ij}G_{ij} & \tilde{A}_{ij} \end{bmatrix}, \hat{E}_{ij} = \begin{bmatrix} E_{ij} + B_{ij}\tilde{D}_{ij}K_{ij} \\ \tilde{B}_{ij}K_{ij} \end{bmatrix}, \hat{F}_{ij} = \begin{bmatrix} F_{ij} + B_{ij}\tilde{D}_{ij}L_{ij} \\ \tilde{B}_{ij}L_{ij} \end{bmatrix}, \tag{4.22}$$

$$\begin{bmatrix} \hat{C}_i(\sigma_k) \\ \hat{H}_i(\sigma_k) \end{bmatrix} = \begin{bmatrix} C_{ij} + B_{ij}\tilde{D}_{ij}G_{ij} & D_{ij}\tilde{C}_{ij} \\ \left(\sum_{\nu\neq i}\tau_\nu^{-1}\right)^{1/2} H_{ij} & 0 \end{bmatrix}$$

The closed-loop large-scale system composed of closed-loop subsystems can be written as:

$$\zeta(k+1) = \hat{A}(\sigma_k)\zeta(k) + \tilde{T}_1^{1/2}\hat{E}(\sigma_k)\bar{\eta}(k) + \gamma^{-1}\hat{F}_i(\sigma_k)\bar{w}_i(k) \tag{4.23}$$

$$\bar{z}(k) = \begin{bmatrix} \hat{C}(\sigma_k) \\ \hat{H}(\sigma_k) \end{bmatrix}\zeta(k) + \tilde{T}_1^{1/2}\begin{bmatrix} \hat{J}(\sigma_k) \\ 0 \end{bmatrix}\bar{\eta}(k) + \gamma^{-1}\begin{bmatrix} \hat{D}(\sigma_k) \\ 0 \end{bmatrix}\bar{w}(k) \tag{4.24}$$

where $\tilde{T}_1 = \mathrm{diag}[\tau_1^{-1}I \ ... \ \tau_N^{-1}I]$,$\hat{A}(\sigma_k) = \mathrm{diag}[\hat{A}_1(\sigma_k) \ ... \ \hat{A}_N(\sigma_k)]$, $\hat{C}(\sigma_k) = \mathrm{diag}[\hat{C}_1(\sigma_k) \ ... \ \hat{C}_N(\sigma_k)]$, $\hat{E}(\sigma_k) = \mathrm{diag}[\hat{E}_1(\sigma_k) \ ... \ \hat{E}_N(\sigma_k)]$, $\hat{F}(\sigma_k) = \mathrm{diag}[\hat{F}_1(\sigma_k) \ ... \ \hat{F}_N(\sigma_k)]$, $\hat{J}(\sigma_k) = \mathrm{diag}[\hat{J}_1(\sigma_k) \ ... \ \hat{J}_N(\sigma_k)]$, $\hat{D}(\sigma_k) = \mathrm{diag}[\hat{D}_1(\sigma_k) \ ... \ \hat{D}_N(\sigma_k)]$, and $\hat{H}(\sigma_k) = \mathrm{diag}[\hat{H}_1(\sigma_k) \ ... \ \hat{H}_N(\sigma_k)]$.

### 4.3.2 The main result

We state the main theorem which provides necessary and sufficient conditions for quadratic stabilization with a given disturbance attenuation level:

**Theorem 4.1** The large-scale system (4.11) is quadratically stochastically stabilizable with a disturbance attenuation level $\gamma$ via decentralized mode-dependent output feedback (4.17) if and only if there exist symmetric matrices $\{X_{ij}\}, \{Y_{ij}\}, \{Z_{ij\ell}\}$, matrices $\{W_{ij}\}$, $\{R_{ij}\}$, $\{S_{ij}\}$, $\{T_{ij}\}$, $\{J_{ij}\}$ and constants $\{\tau_i\}, \{\tilde{\tau}_i\}$, $i = 1, .., N$, $j, \ell = 1, ..., M$, satisfying the rank-

constrained LMIs:

$$\left[\begin{array}{cccc|cccc} Y_{ij} & \bullet & \bullet & \bullet & \bullet & \bullet & \bullet & \bullet \\ I & X_{ij} & \bullet & \bullet & \bullet & \bullet & \bullet & \bullet \\ 0 & 0 & \tilde{\tau}_i I & \bullet & \bullet & \bullet & \bullet & \bullet \\ 0 & 0 & 0 & \gamma^2 I & \bullet & \bullet & \bullet & \bullet \\ \hline A_{ij}Y_{ij}+B_{ij}S_{ij} & A_{ij}+B_{ij}T_{ij}G_{ij} & E_{ij}+B_{ij}T_{ij}K_{ij} & F_{ij}+B_{ij}T_{ij}L_{ij} & J_{ij}+J_{ij}^T-\bar{Z}_{ij} & \bullet & \bullet & \bullet \\ W_{ij} & \bar{X}_{ij}+R_{ij}G_{ij} & \bar{X}_{ij}E_{ij}+R_{ij}K_{ij} & \bar{X}_{ij}F_{ij}+R_{ij}L_{ij} & I & \bar{X}_{ij} & \bullet & \bullet \\ C_{ij}Y_{ij}+D_{ij}S_{ij} & C_{ij}+D_{ij}T_{ij}G_{ij} & D_{ij}T_{ij}K_{ij} & D_{ij}T_{ij}L_{ij} & 0 & 0 & I & \bullet \\ \tilde{H}_{ij}Y_{ij} & \tilde{H}_{ij} & 0 & 0 & 0 & 0 & 0 & \tilde{I}_i \end{array}\right] > 0 \tag{4.25}$$

$$\begin{bmatrix} Z_{ij\ell} & J_{ij}^T \\ J_{ij} & Y_{i\ell} \end{bmatrix} > 0, \begin{bmatrix} \tilde{\tau}_i & 1 \\ 1 & \tau_i \end{bmatrix} \geq 0, \operatorname{rank}\begin{bmatrix} \tilde{\tau}_i & 1 \\ 1 & \tau_i \end{bmatrix} \leq 1 \tag{4.26}$$

where $\bar{X}_{ij} = \sum_{\ell=1}^{M} \pi_{j\ell} X_{i\ell}$, $\bar{Z}_{ij} = \sum_{\ell=1}^{M} \pi_{j\ell} Z_{ij\ell}$. Furthermore, the corresponding mode-dependent controller matrices are given as:

$$\begin{bmatrix} \tilde{A}_{ij} & \tilde{B}_{ij} \\ \tilde{C}_{ij} & \tilde{D}_{ij} \end{bmatrix} = \begin{bmatrix} \hat{Y}_{ij} - \bar{X}_{ij} & \bar{X}_{ij}B_{ij} \\ 0 & I \end{bmatrix}^{-1} \begin{bmatrix} W_{ij} - \bar{X}_{ij}A_{ij}Y_{ij} & R_{ij} \\ S_{ij} & T_{ij} \end{bmatrix} \begin{bmatrix} Y_{ij} & 0 \\ G_{ij}Y_{ij} & I \end{bmatrix}^{-1} \tag{4.27}$$

where $\hat{Y}_{ij} = \sum_{\ell=1}^{M} \pi_{j\ell} Y_{i\ell}^{-1}$.

### 4.3.3 Proof of Theorem 4.1

**Sufficiency**

Assume that (4.25), (4.26) are satisfied. Note that the rank constraints implies $\tilde{\tau}_i = \tau_i^{-1} > 0$. Using the same algebraic transformations in Geromel et al. (2009) and the proof of Lemma 2.1, it can be easily shown that the following matrix inequality holds:

$$\begin{bmatrix} P_{ij} & 0 & 0 \\ 0 & \tau_i^{-1} I & 0 \\ 0 & 0 & \gamma^2 I \end{bmatrix} - \begin{bmatrix} \begin{pmatrix} \hat{A}_{ij}^T \bar{P}_{ij} \hat{A}_{ij} + \hat{C}_{ij}^T \hat{C}_{ij} + \\ \left(\sum_{\nu \neq i} \tau_\nu^{-1}\right) \hat{H}_{ij}^T \hat{H}_{ij} \end{pmatrix} & \bullet & \bullet \\ \hat{E}_{ij}^T \bar{P}_{ij} \hat{A}_{ij} + \hat{J}_{ij}^T \hat{C}_{ij} & \hat{E}_{ij}^T \bar{P}_{ij} \hat{E}_{ij} + \hat{J}_{ij} \hat{J}_{ij} & \bullet \\ \hat{F}_{ij}^T \bar{P}_{ij} \hat{A}_{ij} + \hat{D}_{ij}^T \hat{C}_{ij} & \hat{F}_{ij}^T \bar{P}_{ij} \hat{E}_{ij} + \hat{D}_{ij}^T \hat{J}_{ij} & \hat{F}_{ij}^T \bar{P}_{ij} \hat{F}_{ij} + \hat{D}_{ij}^T \hat{D}_{ij} \end{bmatrix} > 0 \tag{4.28}$$

where

$$P_{ij} = \begin{bmatrix} X_{ij} & \bullet \\ Y_{ij}^{-1} - X_{ij} & X_{ij} - Y_{ij}^{-1} \end{bmatrix},$$

and the closed-loop matrices were defined in (4.22).

Define $P_j = \text{diag}[P_{1j} \ ... \ P_{1N}]$, using similar argument to the proof in §3.3.3, we get

$$\begin{bmatrix} \zeta \\ \eta \\ w \end{bmatrix}^T \left( \begin{bmatrix} \hat{A}_j & \hat{E}_j & \hat{F}_j \\ \hat{C}_j & \hat{D}_j & 0 \end{bmatrix}^T \begin{bmatrix} \bar{P}_j & 0 \\ 0 & I \end{bmatrix} \begin{bmatrix} \hat{A}_j & \hat{E}_j & \hat{F}_j \\ \hat{C}_j & \hat{D}_j & 0 \end{bmatrix} - \begin{bmatrix} P_j & 0 & 0 \\ 0 & 0 & 0 \\ 0 & 0 & \gamma^2 I \end{bmatrix} \right) \begin{bmatrix} \zeta \\ \eta \\ w \end{bmatrix} < 0 \tag{4.29}$$

for all $w \in \ell_2, \eta \in \Xi$

Hence, it follows from the bounded real lemma (Lemma 2.1) that $\|\mathscr{S}_{c,zw}\| < \gamma$ for all $\eta \in \Xi$.

■

**Necessity**

Using the similar arguments to that of the proof in §3.3.3, we find that the following $\mathscr{H}_\infty$ norm bound holds

$$\sup_{\eta_i, w_i} \frac{\|\bar{z}_i(k)\|_2^2}{\|\bar{w}_i(k)\|_2^2} < 1 \tag{4.30}$$

This implies that controller (4.17) achieves a unitary $\mathscr{H}_\infty$ -norm for every auxiliary closed-loop subsystem (4.21). Thus, utilizing Lemma 2.1 and the theory of $\mathscr{H}_\infty$ -control of DMJLSs (Geromel et al., 2009), LMIs (4.25), (4.26) hold. ■

### 4.3.4 The case of Markov chain satisfying $\pi_{ij} = \pi_j$

The conditions of Theorem 4.1 will simplify considerably if the Markov chain satisfy the condition that $\forall i, \pi_{ij} = \pi_j$. This type of conditions is satisfied in networked system with Bernoulli erasure model.

**Theorem 4.2** (a) The large-scale closed loop system (4.23) satisfying that $\forall i, \pi_{ij} = \pi_j$ is quadratically stabilizable via decentralized mode-dependent feedback (4.17) if and only if there exist there exist symmetric matrices $\{X_i\}, \{Y_i\}$, matrices $\{W_{ij}\}, \{R_{ij}\}\{S_{ij}\}, \{T_{ij}\}$ and constants $\{\tau_i\}, \{\tilde{\tau}_i\}$, $i = 1, .., N$, $j, \ell = 1, ..., M$, satisfying the rank-constrained LMIs:

$$\left[ \begin{array}{c|ccc} \Sigma_i & \bullet & \dots & \bullet \\ \hline \sqrt{\pi_1}\,\Psi_{i1} & \Pi_i & \dots & \bullet \\ \vdots & \vdots & \ddots & \vdots \\ \sqrt{\pi_M}\,\Psi_{iM} & 0 & \dots & \Pi_i \end{array} \right] > 0, \begin{bmatrix} \tilde{\tau}_i & 1 \\ 1 & \tau_i \end{bmatrix} \geq 0, \text{rank} \begin{bmatrix} \tilde{\tau}_i & 1 \\ 1 & \tau_i \end{bmatrix} \leq 1 \tag{4.31}$$

where $\Sigma_i = \mathrm{diag}[Z_i \;\; \tilde{\tau}_i I \;\; \gamma^2 I]$, $\Pi_i = \mathrm{diag}[Z_i \;\; I \;\; \tilde{I}_i]$,

$$Z_i = \begin{bmatrix} Y_i & \bullet \\ I & X_i \end{bmatrix}, \Psi_{ij} = \begin{bmatrix} A_{ij}Y_i + B_{ij}S_{ij} & A_{ij} + B_{ij}T_{ij}G_{ij} & E_{ij} + B_{ij}T_{ij}K_{ij} & F_{ij} + B_{ij}T_{ij}L_{ij} \\ W_{ij} & X_i + R_{ij}G_{ij} & X_iE_{ij} + R_{ij}K_{ij} & X_iF_{ij} + R_{ij}L_{ij} \\ C_{ij}Y_i + D_{ij}S_{ij} & C_{ij} + D_{ij}T_{ij}G_{ij} & D_{ij}T_{ij}K_{ij} & D_{ij}T_{ij}L_{ij} \\ \tilde{H}_{ij}Y_i & \tilde{H}_{ij} & 0 & 0 \end{bmatrix}$$

Furthermore, the corresponding mode-dependent control gain is given by (4.27).

***Proof:*** The proof follows the lines of the proof of Theorem 4.1, except that it uses Lemma 2.2 instead of Lemma 2.1. ■

**Remark 4.1** In the special case of centralized control ($N = 1$), Theorem 4.1 reduces to the results of Geromel et al. (2009), and Theorem 4.2 reduces to the results of Seiler et al. (2005).

### 4.3.5 Cone-Complementarity Linearization Algorithm

The conditions of Theorems 4.1,4.2 involve a rank constraint, which is nonconvex. There are several iterative methods for dealing with rank-constraints (El Ghaoui et al., 1997, Orsi et al., 2006). We will apply the iterative cone-complementarity algorithm (El Ghaoui et al., 1997) due to its simplicity and effectiveness.

The cone-complementarity algorithm for solving (4.25),(4.26) is described as follows, with a given threshold $\varepsilon > 0$:

1. Solve (4.25),(4.26) without the rank constraint. Set $k = 0$, and $\tau_i^{(0)} = \tau_i, \tilde{\tau}_i^{(0)} = \tilde{\tau}_i$. If the LMI is infeasible, exit.

2. Solve the following semi-definite program

$$\underset{\{\tau_i\},\{\tilde{\tau}_i\}}{\text{minimize}} \sum_{i=1}^{N} \tau_i \tilde{\tau}_i^{(k)} + \tilde{\tau}_i \tau_i^{(k)} \tag{4.32}$$

   subject to (4.25),(4.26) without the rank constraint.

3. If $\max_i |\tau_i \tilde{\tau}_i - 1| < \varepsilon$, then the algorithm is successful, exit. Otherwise, if $k$ exceeded the maximum number of iterations, exit.

4. Set $\tau_i^{(k+1)} = \tau_i, \tilde{\tau}_i^{(k+1)} = \tilde{\tau}_i$, and $k := k + 1$. Go to step 2.

**Remark 4.2** The optimal $\mathscr{H}_\infty$ disturbance attenuation level can be obtained via a standard bisection procedure.

### 4.3.6 Local-Mode Dependent Control

In this section, we give sufficient conditions for the existence of local-mode dependent decentralized control. We assume that the local subsystems are Markovian also, which enables us to view the local mode-dependent controllers as cluster observation controllers do Val et al. (2002).

Suppose that every subsystem $\mathscr{S}_i$ is associated with a local Markov chain $\sigma_i(k)$ with state space of $M_i$ elements.

$$x_i(k+1) = A_i(\sigma_i(k))x_i(k) + B_i(\sigma_i(k))u_i(k) + F_i(\sigma_i(k))w_i(k) + \sum_{\nu\neq i}\Gamma_{xi\nu}(k)x_\nu(k) \quad (4.33)$$

$$z_i(k) = C_i(\sigma_i(k))x_i(k) + D_i(\sigma_i(k))u_i(k) \quad (4.34)$$

$$y_i(k) = G_i(\sigma_i(k))x_i(k) + L_i(\sigma_i(k))w_i(k) + \sum_{j\neq i}\Gamma_{yi\nu}(\nu)x_j(k) \quad (4.35)$$

with (4.14), (4.16) defined accordingly.
We consider a *local* mode-dependent decentralized state-feedback of the form:

$$\xi_i(k+1) = \tilde{A}_i(\sigma_i(k))\xi_i(k) + \tilde{B}_i(\sigma_i(k))y_i(k) \quad (4.36)$$

$$u_i(k+1) = \tilde{C}_i(\sigma_i(k))\xi_i(k) + \tilde{D}_i(\sigma_i(k))y_i(k) \quad (4.37)$$

We define the global Markov state $\sigma(k) = (\sigma_1(k)\dots\sigma_N(k))$. The transition matrix for the augmented state can be computed as: $\Lambda = \bigotimes_{i=1}^{N}\Lambda_i$, where $\Lambda_i$ is the transition matrix of $\sigma_i(k)$ and $\otimes$ denotes the Kronecker product. Note that if consider the large-scale system as a whole, then the $i^{\text{th}}$ local controller (4.36) observes the *cluster* of states $\mathscr{C}_{i\nu}$ defined as: $\mathscr{C}_{i\nu} = \{(\sigma_1,..,\sigma_N) : \sigma_i(k) = \nu\}$, thus $(\sigma_1(k)\dots\sigma_N(k))$ are considered as one cluster for a certain $\sigma_i(k)$.

**Corollary 4.1** The large-scale closed loop system (4.23) is quadratically stabilizable using decentralized local mode-dependent feedback (4.36) if it satisfies LMIs (4.26), (4.26) with the equality constraints:

$$X_{ij} = X_{i\nu}, Y_{ij} = Y_{i\nu}, Z_{ij\ell} = Z_{i\nu\ell}, J_{ij} = J_{i\nu}, W_{ij} = W_{i\nu}, S_{ij} = S_{i\nu}, R_{ij} = R_{i\nu}, T_{ij} = T_{i\nu} \quad (4.38)$$

for all $j \in \mathscr{C}_{i\nu}, \nu = 1, ..., M_i$.

If we have also the advantage that state-space of the local subsystems is invariant in each cluster, as in the case of the networked control system considered, this enables us to state the following corollary:

**Corollary 4.2** The large-scale closed loop system (4.23) is quadratically stabilizable with disturbance attenuation level $\gamma$ via decentralized mode-dependent output feedback (4.36) if there exist symmetric matrices $\{X_{i\nu}\}, \{Y_{i\nu}\}, \{Z_{i\nu\ell}\}$, matrices $\{W_{i\nu}\}, \{R_{i\nu}\}\{S_{i\nu}\}, \{T_{i\nu}\}, \{J_{i\nu}\}$ and constants $\{\tau_i\}, \{\tilde{\tau}_i\}$, $i = 1, .., N$, $\nu, \ell = 1, ..., M_i$, satisfying the rank-constrained LMIs:

$$\left[\begin{array}{cccc|cccc}
Y_{i\nu} & \bullet & \bullet & \bullet & \bullet & \bullet & \bullet & \bullet \\
I & X_{i\nu} & \bullet & \bullet & \bullet & \bullet & \bullet & \bullet \\
0 & 0 & \tilde{\tau}_i I & \bullet & \bullet & \bullet & \bullet & \bullet \\
0 & 0 & 0 & \gamma^2 I & \bullet & \bullet & \bullet & \bullet \\
\hline
A_{i\nu}Y_{i\nu} + B_{i\nu}S_{i\nu} & A_{i\nu} + B_{i\nu}T_{i\nu}G_{i\nu} & E_{i\nu} + B_{i\nu}T_{i\nu}K_{i\nu} & F_{i\nu} + B_{i\nu}T_{i\nu}L_{i\nu} & J_{i\nu} + J_{i\nu}^T - \bar{Z}_{i\nu\ell} & \bullet & \bullet & \bullet \\
W_{i\nu} & \bar{X}_{i\nu} + R_{i\nu}G_{i\nu} & \bar{X}_{i\nu}E_{i\nu} + R_{i\nu}K_{i\nu} & \bar{X}_{i\nu}F_{i\nu} + R_{i\nu}L_{i\nu} & I & \bar{X}_{i\nu} & \bullet & \bullet \\
C_{i\nu}Y_{i\nu} + D_{i\nu}S_{i\nu} & C_{i\nu} + D_{i\nu}T_{i\nu}G_{i\nu} & D_{i\nu}T_{i\nu}K_{i\nu} & D_{i\nu}T_{i\nu}L_{i\nu} & 0 & 0 & I & \bullet \\
\tilde{H}_{i\nu}Y_{i\nu} & \tilde{H}_{i\nu} & 0 & 0 & 0 & 0 & 0 & \tilde{I}_i
\end{array}\right] > 0 \tag{4.39}$$

$$\begin{bmatrix} Z_{i\nu\ell} & J_{i\nu}^T \\ J_{i\nu} & Y_{i\ell} \end{bmatrix} > 0, \begin{bmatrix} \tilde{\tau}_i & 1 \\ 1 & \tau_i \end{bmatrix} \geq 0, \operatorname{rank} \begin{bmatrix} \tilde{\tau}_i & 1 \\ 1 & \tau_i \end{bmatrix} \leq 1 \tag{4.40}$$

where $\bar{X}_{i\nu} = \sum_{\ell=1}^{M_i} \pi_{\nu\ell} X_{i\ell}, \bar{Z}_{i\nu} = \sum_{\ell=1}^{M_i} \pi_{\nu\ell} Z_{i\nu\ell}$. Furthermore, the corresponding mode-dependent controller matrices are given as:

$$\begin{bmatrix} \tilde{A}_{i\nu} & \tilde{B}_{i\nu} \\ \tilde{C}_{i\nu} & \tilde{D}_{i\nu} \end{bmatrix} = \begin{bmatrix} \hat{Y}_{i\nu} - \bar{X}_{i\nu} & \bar{X}_{i\nu}B_{i\nu} \\ 0 & I \end{bmatrix}^{-1} \begin{bmatrix} W_{i\nu} - \bar{X}_{i\nu}A_{i\nu}Y_{i\nu} & R_{i\nu} \\ S_{i\nu} & T_{i\nu} \end{bmatrix} \begin{bmatrix} Y_{i\nu} & 0 \\ G_{i\nu}Y_{i\nu} & I \end{bmatrix}^{-1} \tag{4.41}$$

where $\hat{Y}_{i\nu} = \sum_{\ell=1}^{M_i} \pi_{\nu\ell} Y_{i\ell}^{-1}$.

***Proof:*** To establish that (4.25) and (4.26) hold, we define $Q_{ij} = Q_{i\nu}$ for all $j \in \mathscr{C}_{i\nu}$. Notice that we can convert the dependence on $\nu$ to $j$ in all variables since we have invariant dynamics of $\mathscr{S}_i$ under the $i^{\text{th}}$ cluster. ■

**Remark 4.3** Note that Corollary 4.2, when applicable, gives us a clear computational advantage over Theorem 4.1, since the number of matrix inequalities is $N \sum_{i=1}^{N} M_i$ and $N \prod_{i=1}^{N} M_i$, respectively.

## 4.4 Decentralized Guaranteed Cost Output Feedback Controller Synthesis

### 4.4.1 Guaranteed Cost Problem Formulation

Consider a large-scale system $\mathscr{S}$ composed of $N$ interconnected discrete-time Markovian jump linear subsystems $\{\mathscr{S}_i\}_{i=1}^N$ as in Figure 4.2. The subsystem $\mathscr{S}_i$ is given as:

$$x_i(k+1) = A_i(\sigma_k)x_i(k) + B_i(\sigma_k)u_i(k) + \textstyle\sum_{\nu\neq i}\Gamma_{xi\nu}(k)x_\nu(k) \tag{4.42}$$

$$y_i(k) = G_i(\sigma_k)x_i(k) + \textstyle\sum_{\nu\neq i}\Gamma_{yi\nu}(\nu)x_\nu(k) \tag{4.43}$$

where $x_i \in \mathbb{R}^{n_i}$, $u_i \in \mathbb{R}^{m_i}$, and $y_i \in \mathbb{R}^{o_i}$ are local state, input, and measured output, respectively.

The interaction matrices $\Gamma_{xij}(k), \Gamma_{yij}(k)$ are structured as:

$$[\Gamma_{xij}(k) \;\; \Gamma_{yij}(k)] = [E_i(\sigma_k) \;\; K_i(\sigma_k)]\Delta_{ij}(k)H_j(\sigma_k) \tag{4.44}$$

where $\Delta_{ij} \in \mathbb{R}^{r\times s}$ are time-varying and known only to satisfy the norm-bound:

$$\sum_{\nu\neq i}\Delta_{i\nu}(k)\Delta_{i\nu}^T(k) \leq I \tag{4.45}$$

Note that if we use the terminology that $\eta_i(k) = \sum_{\nu\neq i}\Delta_{i\nu}(k)H_\nu(\sigma_k)x_\nu(k)$ is an interaction signal, then the above bound is equivalent to

$$\|\eta_i(k)\|^2 \leq \sum_{\nu\neq i}\|\psi_\nu(k)\|_2^2 \triangleq \sum_{\nu\neq i}\|H_\nu(\sigma_k)x_\nu(k)\|_2^2 \tag{4.46}$$

If an interaction signal $\eta_i(k) \in \ell_2$ satisfy the above bound, it is said to be *admissible*. The set of all admissible interaction signals for $\mathscr{S}$ is denoted by $\Xi$.

The Markov chain $\sigma_k \in \{1,..,M\}$ is a sequence of random variables with the following transition probabilities: $\pi_{ij} = \Pr[\sigma_{k+1} = i|\sigma_k = j]$. The mode-dependent decentralized dynamic output-feedback has the form:

$$\xi_i(k+1) = \tilde{A}_i(\sigma_k)\xi_i(k) + \tilde{B}_i(\sigma_k)y_i(k) \tag{4.47}$$

$$u_i(k) = \tilde{C}_i(\sigma_k)\xi_i(k) + \tilde{D}_i(\sigma_k)y_i(k) \tag{4.48}$$

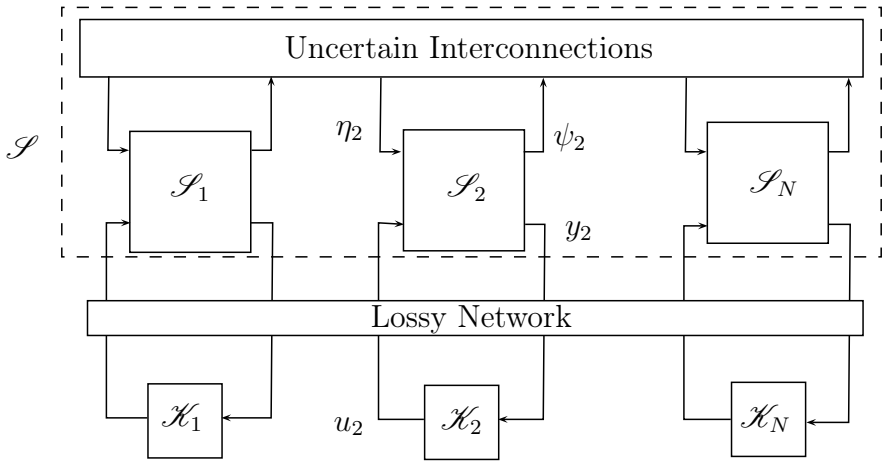


Figure 4.2: General Block diagram of the decentralized DMJLS with output feedback.

We aim at guaranteeing a worst case quadratic performance $\sup_{\Xi} J < c, c > 0$, where:

$$J = \mathbb{E}\sum_{i=1}^{N}\left[\sum_{k=0}^{\infty} x_i^T(k)U_i(\sigma_k)x_i(k) + u_i^T(k)V_i(\sigma_k)u_i(k)\middle| x_i(0), \sigma_0\right] \tag{4.49}$$

where $U_{ij}, V_{ij} > 0$. We define $C_{ij} = \left[U_{ij}^{1/2^T}\ 0\right]^T$, and $D_{ij} = \left[0\ V_{ij}^{1/2^T}\right]^T$.

We assume that

1. The pairs $(A_i(\sigma_k), B_i(\sigma_k)), i = 1, ..., N$ are stochastically stabilizable (Ji et al., 1991, Costa et al., 2005).

2. The pairs $(A_i(\sigma_k), G_i(\sigma_k)), i = 1, ..., N$ are stochastically detectable (Costa et al., 2005).

After applying controller (4.47) to the system (4.42), we get closed-loop subsystem:

$$\zeta_i(k+1) = \hat{A}_i(\sigma_k)\zeta_i(k) + \hat{E}_i(\sigma_k)\eta_i(k) \tag{4.50}$$

where $\zeta_i = [x_i^T\ \xi_i^T]^T$,

$$\hat{A}_{ij} = \begin{bmatrix} A_{ij} + B_{ij}\tilde{D}_{ij}G_{ij} & B_{ij}\tilde{C}_{ij} \\ \tilde{B}_{ij}G_{ij} & \tilde{A}_{ij} \end{bmatrix}, \hat{E}_{ij} = \begin{bmatrix} E_{ij} + B_{ij}\tilde{D}_{ij}K_{ij} \\ \tilde{B}_{ij}K_{ij} \end{bmatrix}, \tag{4.51}$$

The closed-loop large-scale system composed of closed-loop subsystems can be written as:

$$\mathscr{S}_c: \quad \zeta(k+1) = (\hat{A}(\sigma_k) + \hat{E}(\sigma_k)\Delta(k)\hat{H}(\sigma_k))\zeta(k) \tag{4.52}$$

where $\Delta(k) = [\Delta_{ij}(k)]_{i,j=1}^N$, $\Delta_{ii} = 0$, $\hat{A}(\sigma_k) = \text{diag}[\hat{A}_1(\sigma_k) \ldots \hat{A}_N(\sigma_k)]$, $\hat{E}(\sigma_k) = \text{diag}[\hat{E}_1(\sigma_k) \ldots \hat{E}_N(\sigma_k)]$, and $\hat{H}(\sigma_k) = \text{diag}[\hat{H}_1(\sigma_k) \ldots \hat{H}_N(\sigma_k)]$, where $\hat{H}_i(\sigma_k) = [H_i(\sigma_k)\ 0]$.
We state the motivating lemma:

**Lemma 4.1** Suppose that there exist matrices $\{P_j\} > 0$, controller matrices $\{\tilde{A}_j\}, \{\tilde{B}_j\}, \{\tilde{C}_j\}, \{\tilde{D}_j\}$ such that the following matrix inequalities hold for $j = 1, .., M$

$$(\hat{A}_j + \hat{E}_j\Delta(k)\hat{H}_j)^T\bar{P}_j(\hat{A}_j + \hat{E}_j\Delta(k)\hat{H}_j) - P_j + \begin{bmatrix} U_j & 0 \\ 0 & 0 \end{bmatrix} + \begin{bmatrix} \tilde{D}_jG_j + \tilde{D}_jK_j\Delta H_j & \tilde{C}_j \end{bmatrix}^T V_j \begin{bmatrix} \tilde{D}_jG_j + \tilde{D}_jK_j\Delta H_j & \tilde{C}_j \end{bmatrix} < 0 \tag{4.53}$$

for all $\Delta(k)$ satisfying $\sum_{j\neq i}\Delta_{ij}(k)\Delta_{ij}^T(k) \leq I$, then $\mathscr{S}_c$ is quadratically stable and $J \leq \mathbb{E}\zeta^T(0)P(\sigma_0)\zeta(0)$.

***Proof:*** For the first part, Equation (4.53) guarantees the quadratic stability of the system since for any admissible $\Delta$:

$$(\hat{A}_j + \hat{E}_j\Delta(k)\hat{H}_j)^T\bar{P}_j(\hat{A}_j + \hat{E}_j\Delta(k)\hat{H}_j) - P_j < 0$$

To establish the second part, let $V(\zeta(k), \sigma_k) = \zeta^T(k)P(\sigma_k)\zeta(k)$. It follows from (4.53) that if $\sigma_k = j$:

$$\begin{aligned} &x(k)^TU_jx(k) + u^T(k)V_ju(k) \\ &\leq \zeta^T(k)\Big((A_j + B_jK_j + E_j\Delta H_j)^T\bar{P}_j(A_j + B_jK_j + E_j\Delta H_j - P_j)\Big)\zeta(k) \\ &= V(\zeta(k), \sigma_k) - \mathbb{E}[V(\zeta(k+1), \sigma_{k+1})|\sigma_k = i] \end{aligned}$$

summing from 0 to $\infty$ and taking the expected value:

$$J \leq V(x(0), \sigma_0) = \mathbb{E}\zeta^T(0)P(\sigma_0)\zeta(0) \tag{4.54}$$

where $\lim_{k\to\infty}\mathbb{E}V(x(k), \sigma_k) = 0$, since the system is quadratically stable. ■

This motivates the following definition for our problem:

**Definition 4.2** The large-scale system $\mathscr{S}$ with subsystems $\{\mathscr{S}_i\}_{i=1}^N$ defined in (4.42),(4.46) with cost (4.49) is guaranteed cost quadratically stochastically stabilizable via decentralized output-feedback of the form (4.47) if there exist matrices $\{P_j\} > 0$, controller matrices

$\{\tilde{A}_j\}, \{\tilde{B}_j\}, \{\tilde{C}_j\}, \{\tilde{D}_j\}$ such that the matrix inequalities (4.53) are satisfied for all $\Delta(k)$ satisfying $\sum_{j\neq i} \Delta_{ij}(k)\Delta_{ij}^T(k) \leq I$.

### 4.4.2 The main result

We state the main theorem which provides necessary and sufficient conditions for guaranteed cost quadratic stabilization:

**Theorem 4.3** (a) The large-scale closed loop system (4.66) is guaranteed cost quadratically stochastically stabilizable via decentralized mode-dependent output feedback (4.47) if and only if there exist symmetric matrices $\{X_{ij}\}, \{Y_{ij}\}, \{Z_{ij\ell}\}$, matrices $\{W_{ij}\}$, $\{R_{ij}\}$, $\{S_{ij}\}$, $\{T_{ij}\}$, $\{J_{ij}\}$ and constants $\{\tau_i\}, \{\tilde{\tau}_i\}$, $i = 1, .., N$, $j, \ell = 1, ..., M$, satisfying the rank-constrained LMIs (4.55) and

$$\left[\begin{array}{ccc|cccc} Y_{ij} & \bullet & \bullet & \bullet & \bullet & \bullet & \bullet \\ I & X_{ij} & \bullet & \bullet & \bullet & \bullet & \bullet \\ 0 & 0 & \tilde{\tau}_i I & \bullet & \bullet & \bullet & \bullet \\ \hline A_{ij}Y_{ij} + B_{ij}S_{ij} & A_{ij} + B_{ij}T_{ij}G_{ij} & E_{ij} + B_{ij}T_{ij}K_{ij} & J_{ij} + J_{ij}^T - \bar{Z}_{ij} & \bullet & \bullet & \bullet \\ W_{ij} & \bar{X}_{ij} + R_{ij}G_{ij} & \bar{X}_{ij}E_{ij} + R_{ij}K_{ij} & I & \bar{X}_{ij} & \bullet & \bullet \\ C_{ij}Y_{ij} + D_{ij}S_{ij} & C_{ij} + D_{ij}T_{ij}G_{ij} & D_{ij}T_{ij}K_{ij} & 0 & 0 & I & \bullet \\ \tilde{H}_{ij}Y_{ij} & \tilde{H}_{ij} & 0 & 0 & 0 & 0 & \tilde{I}_i \end{array}\right] > 0 \tag{4.55}$$

$$\begin{bmatrix} Z_{ij\ell} & J_{ij}^T \\ J_{ij} & Y_{i\ell} \end{bmatrix} > 0, \begin{bmatrix} \tilde{\tau}_i & 1 \\ 1 & \tau_i \end{bmatrix} \geq 0, \text{rank} \begin{bmatrix} \tilde{\tau}_i & 1 \\ 1 & \tau_i \end{bmatrix} \leq 1 \tag{4.56}$$

where $\bar{X}_{ij} = \sum_{\ell=1}^{M} \pi_{j\ell} X_{i\ell}, \bar{Z}_{ij} = \sum_{\ell=1}^{M} \pi_{j\ell} Z_{ij\ell}$. Furthermore, the corresponding mode-dependent controller matrices are given as:

$$\begin{bmatrix} \tilde{A}_{ij} & \tilde{B}_{ij} \\ \tilde{C}_{ij} & \tilde{D}_{ij} \end{bmatrix} = \begin{bmatrix} \hat{Y}_{ij} - \bar{X}_{ij} & \bar{X}_{ij}B_{ij} \\ 0 & I \end{bmatrix}^{-1} \begin{bmatrix} W_{ij} - \bar{X}_{ij}A_{ij}Y_{ij} & R_{ij} \\ S_{ij} & T_{ij} \end{bmatrix} \begin{bmatrix} Y_{ij} & 0 \\ G_{ij}Y_{ij} & I \end{bmatrix}^{-1} \tag{4.57}$$

where $\hat{Y}_{ij} = \sum_{\ell=1}^{M} \pi_{j\ell} Y_{i\ell}^{-1}$.

(b) If the problem in part (a) is feasible, then via solving the following semi-definite program:

$$\text{minimize} \sum_{i=1}^{N} a_i \tag{4.58}$$

subject to (4.55), (4.56) and

$$\begin{bmatrix} a_i & \bullet \\ Q_i & \tilde{Y}_i \end{bmatrix} > 0 \tag{4.59}$$

where $Q_i = [\sqrt{\lambda_1}x_i(0) \ ... \ \sqrt{\lambda_N}x_i(0)]^T$, and $\tilde{Y}_i = \text{diag}[Y_{i1} \ ... \ Y_{iM}]$, the optimal worst-case performance (4.49) achievable with $x(0) = \zeta(0)$ via (4.47) can be upper bounded as:

$$\inf_u \sup_\Xi J \leq \sum_{i=1}^N a_i \tag{4.60}$$

**Remark 4.4** Note that the results of Theorem 4.3 involves a nonconvex rank constraint, and it can be treated similarly to §4.3.5.

### 4.4.3 Proof of Theorem 4.3

**Part (a)—Sufficiency**

Assume that (4.55), (4.56) are satisfied. Note that the rank constraints implies $\tilde{\tau}_i = \tau_i^{-1} > 0$. Using the same algebraic transformations in Geromel et al. (2009) and the proof of Lemma 2.1, it can be easily shown that the following matrix inequality holds:

$$\begin{bmatrix} P_{ij} & 0 \\ 0 & \tau_i^{-1}I \end{bmatrix} - \begin{bmatrix} \hat{A}_{ij}^T\bar{P}_{ij}\hat{A}_{ij} + \hat{C}_{ij}^T\hat{C}_{ij} + \left(\sum_{\nu\neq i}\tau_\nu^{-1}\right)\hat{H}_{ij}^T\hat{H}_{ij} & \bullet \\ \hat{E}_{ij}^T\bar{P}_{ij}\hat{A}_{ij} + \hat{J}_{ij}^T\hat{C}_{ij} & \hat{E}_{ij}^T\bar{P}_{ij}\hat{E}_{ij} + \hat{J}_{ij}\hat{J}_{ij} \end{bmatrix} > 0 \tag{4.61}$$

where

$$P_{ij} = \begin{bmatrix} X_{ij} & \bullet \\ Y_{ij}^{-1} - X_{ij} & X_{ij} - Y_{ij}^{-1} \end{bmatrix}, \hat{J}_{ij} = D_{ij}\tilde{D}_{ij}K_{ij}, \begin{bmatrix} \hat{C}_i(\sigma_k) \\ \hat{H}_i(\sigma_k) \end{bmatrix} = \begin{bmatrix} C_{ij} + D_{ij}\tilde{D}_{ij}G_{ij} & D_{ij}\tilde{C}_{ij} \\ \left(\sum_{\nu\neq i}\tau_\nu^{-1}\right)^{1/2} H_{ij} & 0 \end{bmatrix} \tag{4.62}$$

Define $P_j = \text{diag}[P_{1j} \ ... \ P_{1N}]/$ Using similar argument to the proof in §3.4.3, we get

$$\begin{bmatrix} \zeta \\ \eta \end{bmatrix}^T \begin{bmatrix} \hat{A}_j^T\bar{P}_j\hat{A}_j + \hat{C}_j^T\hat{C}_j - P_j & \bullet \\ \hat{E}_j^T\bar{P}_j\hat{A}_j + \hat{J}_j^T\hat{C}_j & \hat{E}_j^T\bar{P}_j\hat{E}_j + \hat{J}_j\hat{J}_j \end{bmatrix} \begin{bmatrix} \zeta \\ \eta \end{bmatrix} < 0 \tag{4.63}$$

for all $\|\eta_i\|_2^2 \leq \sum_{\nu\neq i}\|\psi_\nu\|_2^2$. Note that (4.63) is equivalent to (4.53).

■

**Part (a)—Necessity**

Using similar argument to the proof in §3.4.3, the following bound holds when $x(0) = 0$, for all $\eta_i \in \Xi$:

$$J + \sum_{i=1}^{N} \left[ (\textstyle\sum_{j \neq i} \tau_i^{-1}) \|\psi_i\|_2^2 - \tau_i^{-1} \|\eta_i\|_2^2 \right] \leq -\varepsilon J \tag{4.64}$$

We will convert the bound (4.64) into an $\mathscr{H}_\infty$ bound for on an auxiliary system. Consider the following auxiliary closed-loop subsystem:

$$\begin{aligned} \zeta_i(k+1) &= \hat{A}_i(\sigma_k)\zeta_i(k) + \sqrt{\tau_i}\hat{E}_i(\sigma_k)\bar{\eta}_i(k)) \\ \bar{z}_i(k) &= \begin{bmatrix} \hat{C}_i(\sigma_k) \\ \hat{H}_i(\sigma_k) \end{bmatrix} \zeta_i(k) + \sqrt{\tau_i} \begin{bmatrix} \hat{J}_i(\sigma_k) \\ 0 \end{bmatrix} \bar{\eta}_i(k) \end{aligned} \tag{4.65}$$

The closed-loop large-scale system composed of closed-loop subsystems (4.65) can be written as:

$$\zeta(k+1) = \hat{A}(\sigma_k)\zeta(k) + \tilde{T}_1^{1/2}\hat{E}(\sigma_k)\bar{\eta}(k) \tag{4.66}$$

$$\bar{z}(k) = \begin{bmatrix} \hat{C}(\sigma_k) \\ \hat{H}(\sigma_k) \end{bmatrix} \zeta(k) + \tilde{T}_1^{1/2} \begin{bmatrix} \hat{J}(\sigma_k) \\ 0 \end{bmatrix} \bar{\eta}(k) \tag{4.67}$$

Note that since $\bar{\eta}_i(k) = \tau^{-1/2}\eta_i(k)$, (4.64) implies that the closed-loop system (4.66) satisfies the following $\mathscr{H}_\infty$ -bound:

$$\sup_{\eta \in \Xi} \frac{\|\bar{z}_i(k)\|^2}{\|\bar{\eta}(k)\|_2^2} < 1 \tag{4.68}$$

If we set interconnection disturbances $\eta_j = 0, j \neq i$ in (4.68), then $\bar{z}_j = 0, j \neq i$. This implies:

$$\sup_{\eta_i \in \Xi_i} \frac{\|\bar{z}_i(k)\|_2^2}{\|\bar{\eta}_i(k)\|_2^2} < 1 \tag{4.69}$$

This implies that controller (4.47) achieves a unitary $\mathscr{H}_\infty$ -norm for every auxiliary closed-loop subsystem (4.65). Thus, by theory of $\mathscr{H}_\infty$ -control of DMJLSs (Geromel et al., 2009), the LMIs (4.55), (4.56) hold. ■

**Part (b)**

Note that since

$$J \leq \mathbb{E}\zeta^T(0)P(\sigma_0)\zeta(0)$$

holds of arbitrary $\eta \in \Xi$, and if we assume $x_i(0)$ and $\lambda$ to be known, and we take infimum of both sides, we get:

$$\inf_u \sup_\Xi J = \inf_u \sup_\Xi \sum_{i=1}^{N} \|z_i\|_2^2 \tag{4.70}$$

$$\leq \inf_u \sum_{i=1}^{N} \zeta_i^T(0) \left( \sum_{j=1}^{M} \lambda_j P_{ij} \right) \zeta_i(0) \tag{4.71}$$

$$\leq \inf_u \sum_{i=1}^{N} x_i^T(0) \left( \sum_{j=1}^{M} \lambda_j Y_{ij}^{-1} \right) x_i(0) \tag{4.72}$$

where $\lambda = [\lambda_1, .., \lambda_N]$ is the initial distribution for $\sigma_i$ with $\lambda_i > 0$. The transition from (4.71) to (4.72) was done by substituting for $P_{ij}$ from (4.62) and noting that the choice $x_i(0) = \xi_i(0)$ minimizes the right hand side.
Note that minimizing the right side of (4.70) is equivalent to minimizing $\sum_{i=1}^{N} a_i$ with:

$$a_i > \sum_{j=1}^{M} \lambda_j x_i^T(0) Y_{ij}^{-1} x_i(0) \tag{4.73}$$

Using the Schur complement, (4.58) follows. ■

### 4.4.4 The case of Markov chain satisfying $\pi_{ij} = \pi_j$

The conditions of Theorem 4.3 will simplify considerably if the Markov chain satisfy the condition that $\forall i, \pi_{ij} = \pi_j$. This type of conditions is satisfied in networked system with Bernoulli erasure model, as in section II.

**Theorem 4.4** (a) The large-scale closed loop system (4.66) satisfying that $\forall i, \pi_{ij} = \pi_j$ is quadratically stochastically stabilizable via decentralized mode-dependent feedback (4.47) if and only if there exist there exist symmetric matrices $\{X_i\}, \{Y_i\}$, matrices $\{W_{ij}\}, \{R_{ij}\}, \{S_{ij}\}$, $\{T_{ij}\}$ and constants $\{\tau_i\}, \{\tilde{\tau}_i\}$, $i = 1, .., N$, $j, \ell = 1, ..., M$, satisfying the rank-constrained LMIs:

$$\left[ \begin{array}{c|ccc} \Sigma_i & \bullet & \dots & \bullet \\ \hline \sqrt{\pi_1}\,\Psi_{i1} & \Pi_i & \dots & \bullet \\ \vdots & \vdots & \ddots & \vdots \\ \sqrt{\pi_M}\,\Psi_{iM} & 0 & \dots & \Pi_i \end{array} \right] > 0, \begin{bmatrix} \tilde{\tau}_i & 1 \\ 1 & \tau_i \end{bmatrix} \geq 0, \text{rank} \begin{bmatrix} \tilde{\tau}_i & 1 \\ 1 & \tau_i \end{bmatrix} \leq 1 \tag{4.74}$$

where $\Sigma_i = \text{diag}[Z_i \quad \tilde{\tau}_i I$, $\Pi_i = \text{diag}[Z_i \quad I \quad \tilde{I}_i]$,

$$Z_i = \begin{bmatrix} Y_i & \bullet \\ I & X_i \end{bmatrix}, \Psi_{ij} = \begin{bmatrix} A_{ij}Y_i + B_{ij}S_{ij} & A_{ij} + B_{ij}T_{ij}G_{ij} & E_{ij} + B_{ij}T_{ij}K_{ij} \\ W_{ij} & X_i + R_{ij}G_{ij} & X_iE_{ij} + R_{ij}K_{ij} \\ C_{ij}Y_i + D_{ij}S_{ij} & C_{ij} + D_{ij}T_{ij}G_{ij} & D_{ij}T_{ij}K_{ij} \\ \tilde{H}_{ij}Y_i & \tilde{H}_{ij} & 0 \end{bmatrix} \tag{4.75}$$

Furthermore, the corresponding mode-dependent control gain is given by (4.57). (b) If the problem in part (a) is feasible, then the optimal worst-case performance (4.49) achievable via (4.47) with $x(0) = \zeta(0)$ can be upper bounded by solving the semi-definite program (4.58) subject to (4.74), (4.59).

***Proof:*** The proof follows the lines of the proof of Theorem 4.3, except that it uses Lemma 2.2 instead of Lemma 2.1. ■

### 4.4.5 Local-Mode Dependent Control

In this section, we give sufficient conditions for the existence of local-mode dependent decentralized control. We assume that the local subsystems are Markovian also, which enables us to view the local mode-dependent controllers as cluster observation controllers (do Val et al., 2002).

Suppose that every subsystem $\mathscr{S}_i$ is associated with a local Markov chain $\sigma_i(k)$ with state space of $M_i$ elements.

$$x_i(k+1) = A_i(\sigma_i(k))x_i(k) + B_i(\sigma_i(k))u_i(k) + \sum_{\nu \neq i} \Gamma_{xi\nu}(k)x_\nu(k) \tag{4.76}$$

$$y_i(k) = G_i(\sigma_i(k))x_i(k) + \textstyle\sum_{\nu \neq i} \Gamma_{yi\nu}(\nu)x_\nu(k) \tag{4.77}$$

with (4.44), (4.46) defined accordingly.
We consider a *local* mode-dependent decentralized state-feedback of the form:

$$\xi_i(k+1) = \tilde{A}_i(\sigma_i(k))\xi_i(k) + \tilde{B}_i(\sigma_i(k))y_i(k) \tag{4.78}$$

$$u_i(k) = \tilde{C}_i(\sigma_i(k))\xi_i(k) + \tilde{D}_i(\sigma_i(k))y_i(k) \tag{4.79}$$

We define the global Markov state $\sigma(k) = (\sigma_1(k) \ldots \sigma_N(k))$. The transition matrix for the augmented state can be computed as: $\Lambda = \bigotimes_{i=1}^{N} \Lambda_i$, where $\Lambda_i$ is the transition matrix of $\sigma_i(k)$ and $\otimes$ denotes the Kronecker product. Note that if consider the large-scale system as a whole, then the $i^{\text{th}}$ local controller (4.78) observes the *cluster* of states $\mathscr{C}_{i\nu}$ defined as: $\mathscr{C}_{i\nu} = \{(\sigma_1, .., \sigma_N) : \sigma_i(k) = \nu\}$, thus $(\sigma_1(k) \ldots \sigma_N(k))$ are considered as one cluster for a

certain $\sigma_i(k)$.

**Corollary 4.3** (a) The large-scale closed loop system (4.66) is guaranteed cost quadratically stabilizable using decentralized local mode-dependent feedback (4.78) if it satisfies LMIs (4.55), (4.56) with the equality constraints:

$$X_{ij} = X_{i\nu}, Y_{ij} = Y_{i\nu}, Z_{ij\ell} = Z_{i\nu\ell}, J_{ij} = J_{i\nu}, W_{ij} = W_{i\nu}, S_{ij} = S_{i\nu}, R_{ij} = R_{i\nu}, T_{ij} = T_{i\nu} \quad (4.80)$$

for all $j \in \mathscr{C}_{i\nu}, \nu = 1, ..., M_i$.

(b) If the problem in part (a) is feasible, then the optimal worst-case performance (4.49) achievable via (4.78) can be upper bounded by solving the semi-definite program (4.84) subject to (4.56), (4.59) and (4.80).

If we have also the advantage that state-space of the local subsystems is invariant in each cluster, as in the case of the networked control system next section, this enables us to state the following corollary:

**Corollary 4.4** The large-scale closed loop system (4.66) is guaranteed cost quadratically stochastically stabilizable via decentralized mode-dependent output feedback (4.78) if there exist symmetric matrices $\{X_{i\nu}\}, \{Y_{i\nu}\}, \{Z_{i\nu\ell}\}$, matrices $\{W_{i\nu}\}, \{R_{i\nu}\}\{S_{i\nu}\}, \{T_{i\nu}\}, \{J_{i\nu}\}$ and constants $\{\tau_i\}, \{\tilde{\tau}_i\}$, $i = 1, .., N$, $\nu, \ell = 1, ..., M_i$, satisfying the rank-constrained LMIs (4.81) and

$$\left[\begin{array}{ccc|ccc} Y_{i\nu} & \bullet & \bullet & \bullet & \bullet & \bullet \\ I & X_{i\nu} & \bullet & \bullet & \bullet & \bullet \\ 0 & 0 & \tilde{\tau}_i I & \bullet & \bullet & \bullet \\ \hline A_{i\nu}Y_{i\nu} + B_{i\nu}S_{i\nu} & A_{i\nu} + B_{i\nu}T_{i\nu}G_{i\nu} & E_{i\nu} + B_{i\nu}T_{i\nu}K_{i\nu} & J_{i\nu} + J_{i\nu}^T - \bar{Z}_{i\nu} & \bullet & \bullet \\ W_{i\nu} & \bar{X}_{i\nu} + R_{i\nu}G_{i\nu} & \bar{X}_{i\nu}E_{i\nu} + R_{i\nu}K_{i\nu} & I & \bar{X}_{i\nu} & \bullet \\ C_{i\nu}Y_{i\nu} + D_{i\nu}S_{i\nu} & C_{i\nu} + D_{i\nu}T_{i\nu}G_{i\nu} & D_{i\nu}T_{i\nu}K_{i\nu} & 0 & 0 & I \\ \tilde{H}_{i\nu}Y_{i\nu} & \tilde{H}_{i\nu} & 0 & 0 & 0 & 0 \quad \tilde{I}_i \end{array}\right] > 0 \quad (4.81)$$

$$\begin{bmatrix} Z_{i\nu\ell} & J_{i\nu}^T \\ J_{i\nu} & Y_{i\ell} \end{bmatrix} > 0, \begin{bmatrix} \tilde{\tau}_i & 1 \\ 1 & \tau_i \end{bmatrix} \geq 0, \text{rank} \begin{bmatrix} \tilde{\tau}_i & 1 \\ 1 & \tau_i \end{bmatrix} \leq 1 \quad (4.82)$$

where $\bar{X}_{i\nu} = \sum_{\ell=1}^{M_i} \pi_{\nu\ell} X_{i\ell}, \bar{Z}_{i\nu} = \sum_{\ell=1}^{M_i} \pi_{\nu\ell} Z_{i\nu\ell}$. Furthermore, the corresponding mode-

dependent controller matrices are given as:

$$\begin{bmatrix} \tilde{A}_{i\nu} & \tilde{B}_{i\nu} \\ \tilde{C}_{i\nu} & \tilde{D}_{i\nu} \end{bmatrix} = \begin{bmatrix} \hat{Y}_{i\nu} - \bar{X}_{i\nu} & \bar{X}_{i\nu}B_{i\nu} \\ 0 & I \end{bmatrix}^{-1} \begin{bmatrix} W_{i\nu} - \bar{X}_{i\nu}A_{i\nu}Y_{i\nu} & R_{i\nu} \\ S_{i\nu} & T_{i\nu} \end{bmatrix} \begin{bmatrix} Y_{i\nu} & 0 \\ G_{i\nu}Y_{i\nu} & I \end{bmatrix}^{-1} \tag{4.83}$$

where $\hat{Y}_{i\nu} = \sum_{\ell=1}^{M_i} \pi_{\nu\ell} Y_{i\ell}^{-1}$.

(b) If the problem in part (a) is feasible, then via solving the following semi-definite program:

$$\text{minimize} \sum_{i=1}^{N} a_i \tag{4.84}$$

subject to (4.81), (4.82) and

$$\begin{bmatrix} a_i & \bullet \\ Q_i & \tilde{Y}_i \end{bmatrix} > 0 \tag{4.85}$$

where $Q_i = [\sqrt{\lambda_{i1}}x_i(0) \ ... \ \sqrt{\lambda_{iN}}x_i(0)]^T$, and $\tilde{Y}_i = \text{diag}[Y_{i1} \ ... \ Y_{iM_i}]$, the optimal worst-case performance (4.49) achievable via (4.47) with $x(0) = \zeta(0)$ can be upper bounded as in (4.60).

***Proof:*** The proof is similar to that of Corollary 4.4. ■

**Remark 4.5** Note that Corollary 4.4, when applicable, gives us a clear computational advantage over Theorem 4.3, since the number of matrix inequalities is $N\sum_{i=1}^{N} M_i$ and $N\prod_{i=1}^{N} M_i$, respectively.

## 4.5 Examples and Simulation

### 4.5.1 Example I: Local-mode dependent $\mathscr{H}_\infty$ design for a networked large-scale control system with packet-losses

In this example, we apply the theory we developed to the design of local mode-dependent decentralized controllers for a large-scale system controlled over a communication channels vulnerable to packet-losses in both the forward and the backward channel.

We have three subsystems. For every subsystem, measurement control channel is independent of the control communication channel . Hence, every local Markov state belong to the set $\{11, 10, 01, 00\}$, where "0" denotes failure and "1" denotes success. The symbol "10" denotes success in the measurement transmission, and failure in the control input transmission. We have the following system matrices:

$$A_1 = \begin{bmatrix} -1.066 & 0.02447 \\ -0.04112 & -0.9896 \end{bmatrix}, A_2 = \begin{bmatrix} 0.4393 & 1.825 \\ -0.2639 & 1.366 \end{bmatrix}, A_3 = \begin{bmatrix} -0.1218 & -1.163 \\ 0.7751 & -1.354 \end{bmatrix}, B_1 = \begin{bmatrix} 0.4234 \\ -0.09107 \end{bmatrix}, B_2 = \begin{bmatrix} 0.5108 \\ -0.3165 \end{bmatrix},$$
$$B_3 = \begin{bmatrix} -0.6478 \\ -1.131 \end{bmatrix}, C_1 = \begin{bmatrix} 0.3749 & 0.4770 \\ -0.1137 & -0.6651 \\ 0 & 0 \end{bmatrix}, C_2 = \begin{bmatrix} 0.2665 & -0.1910 \\ -0.8731 & -0.5035 \\ 0 & 0 \end{bmatrix}, C_3 = \begin{bmatrix} 0.5148 & -0.5263 \\ -0.9941 & -0.6278 \\ 0 & 0 \end{bmatrix}, E_1 = \begin{bmatrix} 0.1440 \\ 0.06461 \end{bmatrix},$$
$$E_2 = \begin{bmatrix} -0.01274 \\ 0.03941 \end{bmatrix}, E_3 = \begin{bmatrix} -0.1094 \\ -0.1806 \end{bmatrix}, F_1 = \begin{bmatrix} -0.03133 \\ -0.02061 \end{bmatrix}, F_2 = \begin{bmatrix} 0.01089 \\ 0.01337 \end{bmatrix}, F_3 = \begin{bmatrix} -0.007463 \\ 0.01884 \end{bmatrix}, G_1 = \begin{bmatrix} 1.224 & 1.127 \end{bmatrix},$$
$$G_2 = \begin{bmatrix} 0.5978 & 0.4909 \end{bmatrix}, G_3 = \begin{bmatrix} -1.107 & -0.7921 \end{bmatrix}, H_1 = \begin{bmatrix} -0.1709 & 0.1811 \end{bmatrix}, H_2 = \begin{bmatrix} -0.05247 & 0.1536 \end{bmatrix},$$
$$H_3 = \begin{bmatrix} -0.03527 & 0.2000 \end{bmatrix}, K_1 = -0.08220, K_2 = 0.07824, K_3 = 0.07100, L_1 = -0.1047, L_2 = 0.08406, L_3 = -0.08821,$$

with transition matrices:

$$\Lambda_1 = \begin{bmatrix} 0.1140 & 0.1860 & 0.2660 & 0.4340 \\ 0.2550 & 0.04500 & 0.5950 & 0.1050 \\ 0.2660 & 0.4340 & 0.1140 & 0.1860 \\ 0.5950 & 0.1050 & 0.2550 & 0.04500 \end{bmatrix}, \Lambda_2 = \begin{bmatrix} 0.1750 & 0.3250 & 0.1750 & 0.3250 \\ 0.3050 & 0.1950 & 0.3050 & 0.1950 \\ 0.2380 & 0.4420 & 0.1120 & 0.2080 \\ 0.4148 & 0.2652 & 0.1952 & 0.1248 \end{bmatrix}, \Lambda_3 = \begin{bmatrix} 0.1170 & 0.1830 & 0.2730 & 0.4270 \\ 0.1440 & 0.1560 & 0.3360 & 0.3640 \\ 0.2262 & 0.3538 & 0.1638 & 0.2562 \\ 0.2784 & 0.3016 & 0.2016 & 0.2184 \end{bmatrix}$$

with initial conditions $x_1(0) = [-1 \ \ -1]^T, x_2(0) = [1 \ \ -1]^T, \ , \ x_3(0) = [-0.5 \ 1]^T \ \sigma_i(0) = 00.$

The open loop system is unstable. We aim at designing local mode-dependent output-feedback controller that stabilize the system against admissible uncertain interactions and guarantee disturbance attenuation level of $\gamma = 1.005$.[3] Corollary 4.2 was used successfully to design the controller gains with *packet-zeroing strategy*. The controller matrices are:

$$\tilde{A}_{11} = \begin{bmatrix} -0.2530 & 0.6756 \\ 0.3076 & -0.6874 \end{bmatrix}, \tilde{A}_{12} = \begin{bmatrix} -0.3036 & 0.6694 \\ 0.3131 & -0.6906 \end{bmatrix}, \tilde{A}_{13} = \begin{bmatrix} -0.2565 & 0.6717 \\ -0.2875 & -1.236 \end{bmatrix}, \tilde{A}_{14} = \begin{bmatrix} -1.249 & -0.2011 \\ -0.1284 & -1.097 \end{bmatrix},$$
$$\tilde{A}_{21} = \begin{bmatrix} -1.132 & 1.675 \\ -0.3084 & 0.4574 \end{bmatrix}, \tilde{A}_{22} = \begin{bmatrix} -0.3731 & 0.4739 \\ -0.6869 & 0.8635 \end{bmatrix}, \tilde{A}_{23} = \begin{bmatrix} 0.04915 & 2.726 \\ 0.005518 & 0.7318 \end{bmatrix}, \tilde{A}_{24} = \begin{bmatrix} 0.4665 & 1.709 \\ -0.2885 & 1.424 \end{bmatrix},$$
$$\tilde{A}_{31} = \begin{bmatrix} 0.02353 & -0.02998 \\ 0.05365 & -0.06849 \end{bmatrix}, \tilde{A}_{32} = \begin{bmatrix} 0.6225 & -0.7943 \\ 1.057 & -1.349 \end{bmatrix}, \tilde{A}_{33} = \begin{bmatrix} -0.5691 & -0.4492 \\ -0.001859 & -0.1083 \end{bmatrix}, \tilde{A}_{34} = \begin{bmatrix} -0.08205 & -1.233 \\ 0.8490 & -1.479 \end{bmatrix},$$
$$\tilde{B}_{11} = \begin{bmatrix} -0.01529 \\ -0.5028 \end{bmatrix}, \tilde{B}_{12} = \begin{bmatrix} -0.7647 \\ -0.3571 \end{bmatrix}, \tilde{B}_{21} = \begin{bmatrix} 1.973 \\ 0.5238 \end{bmatrix}, \tilde{B}_{22} = \begin{bmatrix} 1.640 \\ 0.7697 \end{bmatrix}, \tilde{B}_{31} = \begin{bmatrix} 0.5302 \\ 0.05026 \end{bmatrix}, \tilde{B}_{32} = \begin{bmatrix} 0.6084 \\ 0.1799 \end{bmatrix},$$
$$\tilde{C}_{11} = \begin{bmatrix} 0.1023 & 0.0006366 \end{bmatrix}, \tilde{C}_{13} = \begin{bmatrix} 2.158 & 1.896 \end{bmatrix}, \tilde{C}_{21} = \begin{bmatrix} -1.104 & 1.627 \end{bmatrix},$$
$$\tilde{C}_{23} = \begin{bmatrix} -0.7994 & 1.906 \end{bmatrix}, \tilde{C}_{31} = \begin{bmatrix} 0.8014 & -1.028 \end{bmatrix}, \tilde{C}_{33} = \begin{bmatrix} 0.6898 & -1.105 \end{bmatrix}, \tilde{D}_{11} = 1.709, \tilde{D}_{21} = 0.5139, \tilde{D}_{31} = 0.09900$$

with $\tau_1 = 0.3673, \tau_2 = 1.2284, \tau_3 = 0.2224$. The disturbance attenuation level was verified by generating thousands of disturbance signals, and the maximum obtained $\ell_2$-gain was found to be 0.38389 which is less than the designed value.

Controller matrices with *packet-holding strategy* are given by:

[3] This number was chosen based on the fact that $\gamma = 1.005$ is the minimum disturbance attenuation level obtained for the packet-holding controller.

$$\tilde{A}_{11} = \begin{bmatrix} 0.7051 & 1.087 & 0 & 0 \\ 0.1457 & -0.6785 & 0 & 0 \\ 0 & 0 & 0 & 0 \\ 2.044 & 0.4836 & 0 & 0 \end{bmatrix}, \tilde{A}_{12} = \begin{bmatrix} -0.3106 & 0.7731 & 0 & 0.4969 \\ 0.2712 & -0.6758 & 0 & -0.05496 \\ 0 & 0 & 0 & 0 \\ 0 & 0 & 0 & 1 \end{bmatrix}, \tilde{A}_{13} = \begin{bmatrix} -0.02738 & 0.4000 & 0 & 0 \\ -0.3192 & -1.117 & 0 & 0 \\ 0 & 0 & 0 & 0 \\ 2.611 & 1.020 & 0 & 0 \end{bmatrix},$$

$$\tilde{A}_{14} = \begin{bmatrix} -1.160 & -0.04277 & 0 & 0.4489 \\ -0.09791 & -1.030 & 0 & -0.07576 \\ 0 & 0 & 0 & 0 \\ 0 & 0 & 0 & 1 \end{bmatrix}, \tilde{A}_{21} = \begin{bmatrix} -0.5849 & 0.6623 & 0 & 0 \\ -0.6330 & 0.7169 & 0 & 0 \\ 0 & 0 & 0 & 0 \\ -0.3149 & 0.3565 & 0 & 0 \end{bmatrix}, \tilde{A}_{22} = \begin{bmatrix} -0.2099 & 0.2315 & 0 & 1.100 \\ -0.6984 & 0.7457 & 0 & -0.1758 \\ 0 & 0 & 0 & 0 \\ 0 & 0 & 0 & 1 \end{bmatrix},$$

$$\tilde{A}_{23} = \begin{bmatrix} 0.2832 & 1.975 & 0 & 0 \\ -0.1958 & 1.378 & 0 & 0 \\ 0 & 0 & 0 & 0 \\ -0.3210 & 0.3470 & 0 & 0 \end{bmatrix}, \tilde{A}_{24} = \begin{bmatrix} 0.4604 & 1.781 & 0 & 0.5485 \\ -0.3489 & 1.553 & 0 & -0.4632 \\ 0 & 0 & 0 & 0 \\ 0 & 0 & 0 & 1 \end{bmatrix}, \tilde{A}_{31} = \begin{bmatrix} -0.03143 & 0.04256 & 0 & 0 \\ -0.06601 & 0.08950 & 0 & 0 \\ 0 & 0 & 0 & 0 \\ 0.9121 & -1.224 & 0 & 0 \end{bmatrix},$$

$$\tilde{A}_{32} = \begin{bmatrix} 0.6118 & -0.8088 & 0 & -0.7064 \\ 1.029 & -1.360 & 0 & -1.198 \\ 0 & 0 & 0 & 0 \\ 0 & 0 & 0 & 1 \end{bmatrix}, \tilde{A}_{33} = \begin{bmatrix} -0.5315 & -0.2787 & 0 & 0 \\ 0.07870 & 0.1840 & 0 & 0 \\ 0 & 0 & 0 & 0 \\ 0.6543 & -1.390 & 0 & 0 \end{bmatrix}, \tilde{A}_{34} = \begin{bmatrix} -0.09111 & -1.218 & 0 & -0.6776 \\ 0.8505 & -1.464 & 0 & -1.190 \\ 0 & 0 & 0 & 0 \\ 0 & 0 & 0 & 1 \end{bmatrix},$$

$$\tilde{B}_{11} = \begin{bmatrix} -0.7041 \\ -0.4438 \\ 1 \\ 0.5287 \end{bmatrix}, \tilde{B}_{12} = \begin{bmatrix} -0.8402 \\ -0.3650 \\ 1 \\ 0 \end{bmatrix}, \tilde{B}_{13} = \tilde{B}_{14} = \begin{bmatrix} 0 \\ 0 \\ 1 \\ 0 \end{bmatrix}, \tilde{B}_{21} = \begin{bmatrix} 1.674 \\ 0.8432 \\ 1 \\ -0.01177 \end{bmatrix}, \tilde{B}_{22} = \begin{bmatrix} 1.666 \\ 0.8683 \\ 1 \\ 0 \end{bmatrix}, \tilde{B}_{23} = \tilde{B}_{24} = \begin{bmatrix} 0 \\ 0 \\ 1 \\ 0 \end{bmatrix}, \tilde{B}_{31} = \begin{bmatrix} 0.4243 \\ -0.1232 \\ 1 \\ 0.2188 \end{bmatrix},$$

$$\tilde{B}_{32} = \begin{bmatrix} 0.5852 \\ 0.1486 \\ 1 \\ 0 \end{bmatrix}, \tilde{B}_{33} = \tilde{B}_{34} = \begin{bmatrix} 0 \\ 0 \\ 1 \\ 0 \end{bmatrix} \tilde{C}_{11} = \begin{bmatrix} 2.044 \\ 0.4836 \\ 0 \\ 0 \end{bmatrix}^T, \tilde{C}_{13} = \begin{bmatrix} 2.611 \\ 1.020 \\ 0 \\ 0 \end{bmatrix}^T, \tilde{C}_{21} = \begin{bmatrix} -0.3149 \\ 0.3565 \\ 0 \\ 0 \end{bmatrix}^T, \tilde{C}_{23} = \begin{bmatrix} -0.3210 \\ 0.3470 \\ 0 \\ 0 \end{bmatrix}^T,$$

$$\tilde{C}_{31} = \begin{bmatrix} 0.9120 & -1.224 & 0 & 0 \end{bmatrix}, \tilde{C}_{33} = \begin{bmatrix} 0.6543 & -1.390 & 0 & 0 \end{bmatrix}, \tilde{D}_{11} = 0.5287, \tilde{D}_{21} = -0.01175, \tilde{D}_{31} = 0.2188$$

with $\tau_1 = 0.0194, \tau_2 = 1.0136, \tau_3 = 0.07618$.

Figure 4.3 depicts a sample trajectory of the norm of the regulated variable in closed-loop large-scale system with packet-zeroing controller, packet-holding controller and the deterministic controller designed while assuming perfect communication. The disturbance signal was set $w_1(k) = a_1 \sin(3k), w_2(k) = a_2 \sin(3k), w_3(k) = a_3 \sin(3k)$, where $a_1, a_2, a_3$ are independent normally distributed random variables. Clearly, the deterministic controller fails to stabilize the system. The packet-zeroing controller performs better than the packet-holding controller. Indeed, the optimal $\mathscr{H}_\infty$ attenuation level achieved by the packet-zeroing controller is 0.632, while it is 1.005 for the packet-holding controller. This result is not surprising, since difference of performance between the two strategies depends on the system and packet-loss probabilities as observed by Schenato (2009). Figure 4.4 shows the corresponding packet-loss switching signal, respectively.

We study the effect of the packet-loss rates on the stability and the performance of the previous system. We obtain the optimal $\mathscr{H}_\infty$ performance level via a standard bisection procedure. Since there are 12 probability parameters, we fix some of them to show the effect of the rest.

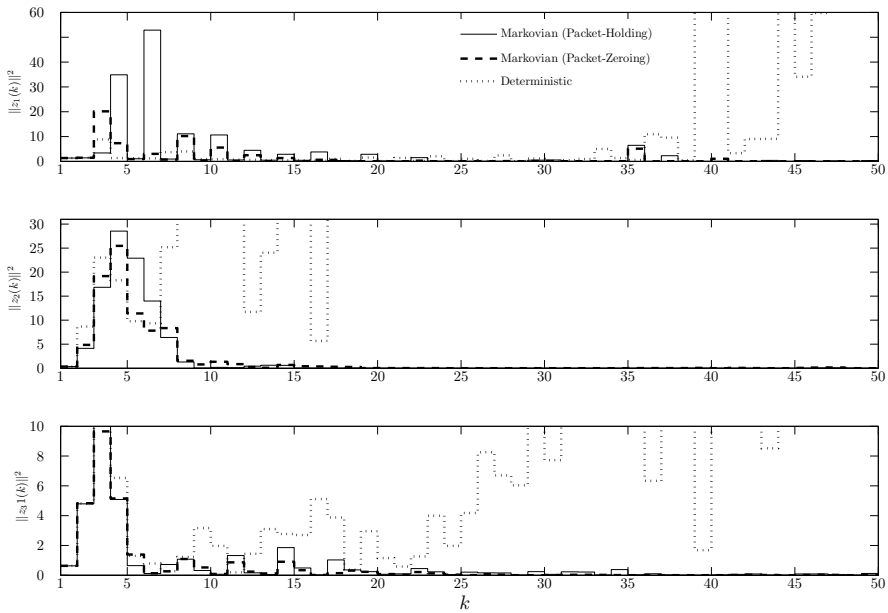


Figure 4.3: Sample state trajectories of networked large-scale control system in Example I.

Figure 4.5-a shows the case when the six channels are identically distributed Markovian channels with failure rate $\pi_f$ and recovery rate $\pi_r$ for the packet-zeroing strategy. The figure shows an interesting and nonintuitive fact that for a fixed recovery probability $\pi_r$, the $\mathscr{H}_\infty$ norm is almost not affected by the failure probability $\pi_f$. A similar observation was made in Geromel et al. (2009).

Figure 4.5-b depicts the $\mathscr{H}_\infty$ norm versus the failure rate for each of the forward and backward channels in first subsystem. The channels which are assumed to be Bernoulli type. Each curve is obtained by varying corresponding failure probability while assuming that all the other channels are failure-free. It is seen that the sensitivity of the $\mathscr{H}_\infty$ norm with respect to the failure probability varies per channel. The packet-zeroing strategy is has equal or better performance compared to packet-holding strategy. Figures 4.5-c,d shows a similar observations for the second and third subsystem channels.

### 4.5.2 Example II: Local-mode dependent Guaranteed Cost design for a networked large-scale control system with packet-losses

In this example, we apply the theory we developed to the design of local mode-dependent decentralized controllers for a large-scale system controlled over a communication channels

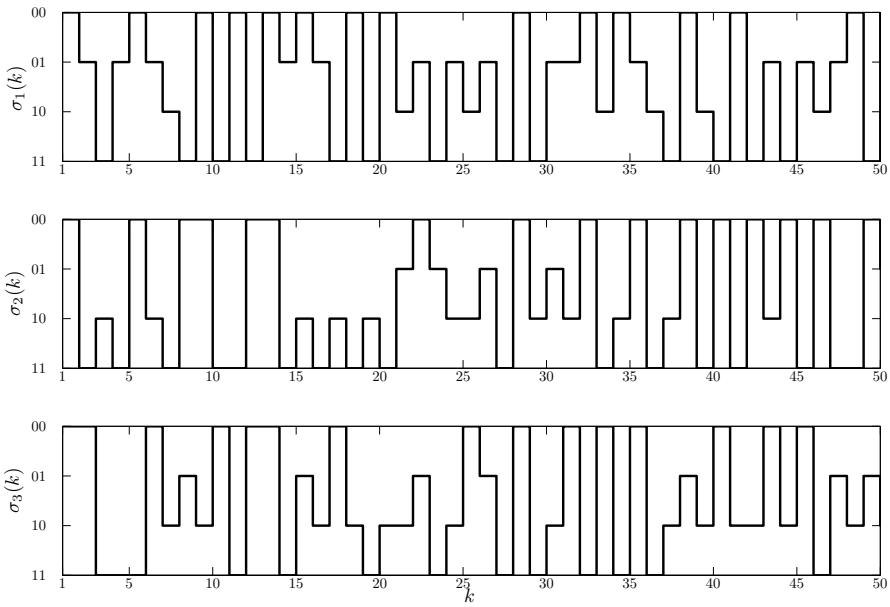


Figure 4.4: Sample packet-loss Markovian switching signal in the networked large-scale system in Example I. Note that '00' denotes complete failure, while '11' denotes complete success.

vulnerable to packet-losses in both the forward and the backward channel.

We have three subsystems. For every subsystem, measurement control channel is independent of the control communication channel . Hence, every local Markov state belong to the set $\{11, 10, 01, 00\}$, where "0" denotes failure and "1" denotes success. The symbol "10" denotes success in the measurement transmission, and failure in the control input transmission. The system matrices same as the previous example. The initial conditions $x_1 = [0.1 \ -0.2]^T, x_2 = [0.3 \ -0.1]^T, x_3 = [0.1 \ 0.1]^T$, $\sigma_1(0) = 00, \sigma_2(0) = 11, \sigma_3(0) = 01$.

The open loop system is unstable. We aim at designing local mode-dependent output-feedback controller that stabilize the system against admissible uncertain interactions with guaranteed cost of $J \leq 3.25$. Corollary 4.4 was used successfully to design the controller gains with *packet-zeroing strategy*. The controller matrices are:

$$\tilde{A}_{11} = \begin{bmatrix} -0.2184 & 0.6789 \\ 0.1987 & -0.7598 \end{bmatrix}, \tilde{A}_{12} = \begin{bmatrix} -0.194 & 0.7898 \\ 0.1948 & -0.7759 \end{bmatrix}, \tilde{A}_{13} = \begin{bmatrix} -0.1645 & 0.718 \\ -0.2572 & -1.188 \end{bmatrix}, \tilde{A}_{14} = \begin{bmatrix} -1.142 & -0.1047 \\ -0.08694 & -1.042 \end{bmatrix},$$

$$\tilde{A}_{21} = \begin{bmatrix} -1.151 & 1.677 \\ -0.3137 & 0.4578 \end{bmatrix}, \tilde{A}_{22} = \begin{bmatrix} -0.4062 & 0.5625 \\ -0.6749 & 0.926 \end{bmatrix}, \tilde{A}_{23} = \begin{bmatrix} 0.05226 & 2.711 \\ 0.005762 & 0.7266 \end{bmatrix}, \tilde{A}_{24} = \begin{bmatrix} 0.4724 & 1.684 \\ -0.2817 & 1.399 \end{bmatrix},$$

$$\tilde{A}_{31} = \begin{bmatrix} -0.002833 & 0.004993 \\ 0.01382 & -0.01578 \end{bmatrix}, \tilde{A}_{32} = \begin{bmatrix} 0.627 & -0.7733 \\ 1.073 & -1.325 \end{bmatrix}, \tilde{A}_{33} = \begin{bmatrix} -0.5916 & -0.4048 \\ -0.03979 & -0.05359 \end{bmatrix}, \tilde{A}_{34} = \begin{bmatrix} -0.07855 & -1.226 \\ 0.8449 & -1.469 \end{bmatrix},$$

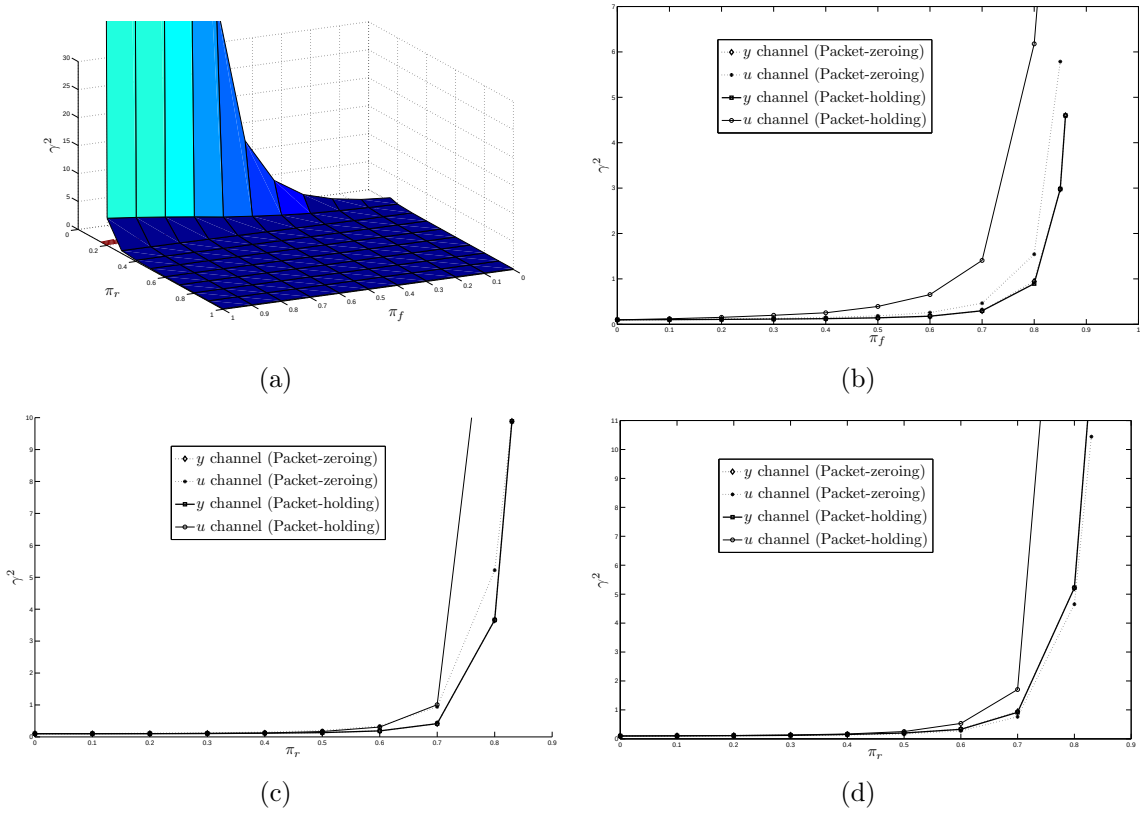


Figure 4.5: (a) The optimal $\mathscr{H}_\infty$ norm versus the probabilities of failure and recovery for the packet-zeroing strategy, (b) optimal $\mathscr{H}_\infty$ norm comparison between the strategies of packet-zeroing and packet-holding versus the probability of failure in the forward and backward channel for the first subsystem, (c) same as (b) but for the second subsystem, (d) same as (b) but for the third subsystem.

$$\tilde{B}_{11} = \begin{bmatrix} 0.0261 \\ -0.3644 \end{bmatrix}, \tilde{B}_{12} = \begin{bmatrix} -0.7687 \\ -0.2283 \end{bmatrix}, \tilde{B}_{21} = \begin{bmatrix} 2.014 \\ 0.534 \end{bmatrix}, \tilde{B}_{22} = \begin{bmatrix} 1.652 \\ 0.7295 \end{bmatrix}, \tilde{B}_{31} = \begin{bmatrix} 0.531 \\ 0.05144 \end{bmatrix}, \tilde{B}_{32} = \begin{bmatrix} 0.6207 \\ 0.2016 \end{bmatrix}, \tilde{C}_{11} = \begin{bmatrix} -0.05812 \\ -0.2544 \end{bmatrix}^T,$$

$$\tilde{C}_{13} = \begin{bmatrix} 2.16 \\ 1.817 \end{bmatrix}^T, \tilde{C}_{21} = \begin{bmatrix} -1.113 \\ 1.618 \end{bmatrix}^T, \tilde{C}_{23} = \begin{bmatrix} -0.7968 \\ 1.898 \end{bmatrix}^T, \tilde{C}_{31} = \begin{bmatrix} 0.8404 \\ -1.039 \end{bmatrix}^T, \tilde{C}_{33} = \begin{bmatrix} 0.7067 \\ -1.127 \end{bmatrix}^T, \tilde{D}_{11} = 1.763, \tilde{D}_{21} = 0.5336, \tilde{D}_{31} = 0.1173,$$

where the rest of matrices are zeros, and $\tau_1 = 0.3674, \tau_2 = 1.2284, \tau_3 = 0.2224$.
Controller matrices with *packet-holding strategy* are given by:

$$\tilde{A}_{11} = \begin{bmatrix} -2.243 & -1.62 & 0 & 0 \\ 0.7135 & -0.1736 & 0 & 0 \\ 0 & 0 & 0 & 0 \\ -4.537 & -5.502 & 0 & 0 \end{bmatrix}, \tilde{A}_{12} = \begin{bmatrix} -0.3231 & 0.7214 & 0 & 0.4367 \\ 0.3 & -0.6696 & 0 & -0.08517 \\ 0 & 0 & 0 & 0 \\ 0 & 0 & 0 & 1.0 \end{bmatrix}, \tilde{A}_{13} = \begin{bmatrix} -0.1644 & 0.2932 & 0 & 0 \\ -0.2726 & -1.076 & 0 & 0 \\ 0 & 0 & 0 & 0 \\ 2.262 & 0.735 & 0 & 0 \end{bmatrix},$$

$$\tilde{A}_{14} = \begin{bmatrix} -1.141 & -0.02405 & 0 & 0.4442 \\ -0.07489 & -1.011 & 0 & -0.08173 \\ 0 & 0 & 0 & 0 \\ 0 & 0 & 0 & 1.0 \end{bmatrix}, \tilde{A}_{21} = \begin{bmatrix} -0.8864 & 0.9797 & 0 & 0 \\ -0.2464 & 1.18 & 0 & 0 \\ 0 & 0 & 0 & 0 \\ -1.048 & -0.2299 & 0 & 0 \end{bmatrix}, \tilde{A}_{22} = \begin{bmatrix} -0.5125 & 0.8736 & 0 & 0.5972 \\ -0.6362 & 1.049 & 0 & -0.3106 \\ 0 & 0 & 0 & 0 \\ 0.0123 & 0.01209 & 0 & 1 \end{bmatrix},$$

$$\tilde{A}_{23} = \begin{bmatrix} 0.2739 & 2.035 & 0 & 0 \\ -0.1658 & 1.254 & 0 & 0 \\ 0 & 0 & 0 & 0 \\ -0.3273 & 0.425 & 0 & 0 \end{bmatrix}, \tilde{A}_{24} = \begin{bmatrix} 0.4438 & 1.813 & 0 & 0.5185 \\ -0.2779 & 1.401 & 0 & -0.3401 \\ 0 & 0 & 0.00001632 & -0.000001045 \\ 0 & 0 & 0 & 1.0 \end{bmatrix}, \tilde{A}_{31} = \begin{bmatrix} -0.04694 & 0.05953 & 0 & 0 \\ -0.0814 & 0.1039 & 0 & 0 \\ 0 & 0 & 0 & 0 \\ 0.9671 & -1.21 & 0 & 0 \end{bmatrix},$$

$$\tilde{A}_{32} = \begin{bmatrix} 0.6366 & -0.793 & 0 & -0.7119 \\ 1.085 & -1.352 & 0 & -1.212 \\ 0 & 0 & 0 & 0 \\ 0 & 0 & 0 & 1.0 \end{bmatrix}, \tilde{A}_{33} = \begin{bmatrix} -0.5221 & -0.2674 & 0 & 0 \\ 0.07348 & 0.2117 & 0 & 0 \\ 0 & 0 & 0 & 0 \\ 0.6592 & -1.422 & 0 & 0 \end{bmatrix}, \tilde{A}_{34} = \begin{bmatrix} -0.06998 & -1.249 & 0 & -0.6935 \\ 0.8606 & -1.496 & 0 & -1.207 \\ 0 & 0 & 0 & 0 \\ 0 & 0 & 0 & 1.0 \end{bmatrix},$$

$$\tilde{B}_{11} = \begin{bmatrix} 1.681 \\ -0.786 \\ 1.0 \\ 5.457 \end{bmatrix}, \tilde{B}_{12} = \begin{bmatrix} -0.6457 \\ -0.296 \\ 1.0 \\ 0 \end{bmatrix}, \tilde{B}_{13} = \begin{bmatrix} 0 \\ 0 \\ 1.0 \\ 0 \end{bmatrix}, \tilde{B}_{14} = \begin{bmatrix} 0 \\ 0 \\ 1.0 \\ 0 \end{bmatrix}, \tilde{B}_{21} = \begin{bmatrix} 1.974 \\ 0.1377 \\ 1.0 \\ 1.226 \end{bmatrix}, \tilde{B}_{22} = \begin{bmatrix} 1.678 \\ 0.6287 \\ 1.0 \\ 0 \end{bmatrix},$$

$$\tilde{B}_{23} = \begin{bmatrix} 0 \\ 0 \\ 1.0 \\ 0 \end{bmatrix}, \tilde{B}_{24} = \begin{bmatrix} 0 \\ 0 \\ 1.0 \\ 0 \end{bmatrix}, \tilde{B}_{31} = \begin{bmatrix} 0.4224 \\ -0.1378 \\ 1.0 \\ 0.2736 \end{bmatrix}, \tilde{B}_{32} = \begin{bmatrix} 0.6194 \\ 0.1967 \\ 1.0 \\ 0 \end{bmatrix}, \tilde{B}_{33} = \begin{bmatrix} 0 \\ 0 \\ 1.0 \\ 0 \end{bmatrix}, \tilde{B}_{34} = \begin{bmatrix} 0 \\ 0 \\ 1.0 \\ 0 \end{bmatrix}, \tilde{C}_{11} = \begin{bmatrix} -4.537 \\ -5.502 \\ 0 \\ 0 \end{bmatrix}^T,$$

$$\tilde{C}_{13} = \begin{bmatrix} 2.262 & 0.735 & 0 & 0 \end{bmatrix}, \tilde{C}_{21} = \begin{bmatrix} -1.048 & -0.23 & 0 & 0 \end{bmatrix}, \tilde{C}_{23} = \begin{bmatrix} -0.3273 & 0.425 & 0 & 0 \end{bmatrix}, \tilde{C}_{31} = \begin{bmatrix} 0.9671 & -1.21 & 0 & 0 \end{bmatrix},$$
$$\tilde{C}_{33} = \begin{bmatrix} 0.6592 & -1.422 & 0 & 0 \end{bmatrix}, \tilde{D}_{11} = 5.457, \tilde{D}_{21} = 1.226, \tilde{D}_{31} = 0.2736$$

where the rest of matrices are zeros, and $\tau_1 = 0.085865, \tau_2 = 0.34216, \tau_3 = 0.142974$.

Figure 4.6 depicts a sample trajectory of the norm of the regulated variable in closed-loop large-scale system with packet-zeroing controller, packet-holding controller and the deterministic controller designed while assuming perfect communication. Clearly, the deterministic controller fails to stabilize the system. The packet-zeroing controller performs a little bit than the packet-holding controller. Indeed, the optimal guaranteed cost achieved by the packet-zeroing controller is 1.65, while it is 3.25 for the packet-holding controller. This result is not surprising, since difference of performance between the two strategies depends on the system and packet-loss probabilities as observed by Schenato (2009). Figure 4.7 shows

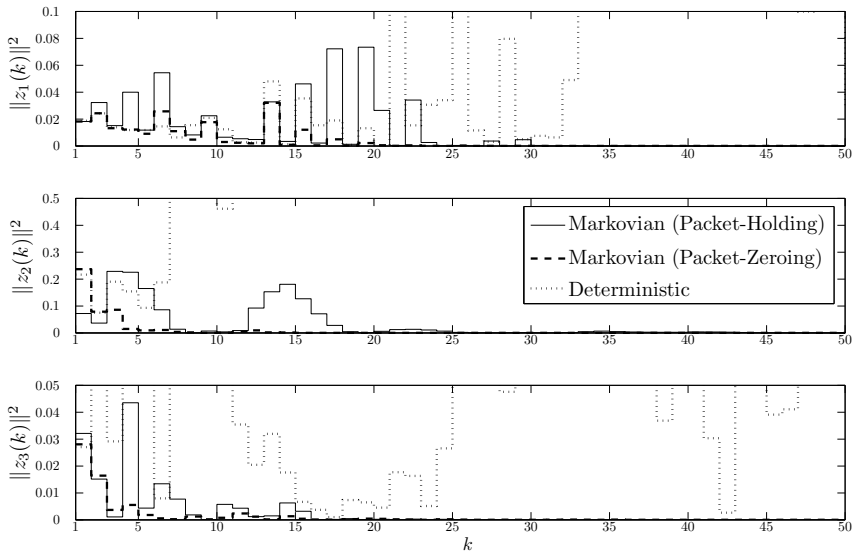


Figure 4.6: Sample state trajectories of networked large-scale control system in Example II.

the corresponding packet-loss switching signal, respectively.

Figure 4.8 shows the running quadratic cost of the closed-loop large-scale with packet-zeroing and packet-holding controllers averaged over 1000 iterations. Again, the packet-zeroing controller is superior in this example.

We study the effect of the packet-loss rates on the stability and the performance of the previous system. We obtain the optimal worst-case quadratic cost level via a standard bisection procedure. Since there are 12 probability parameters, we fix some of them to show the effect of the rest.

Figure 4.9-a shows the case when the six channels are identically distributed Markovian channels with failure rate $\pi_f$ and recovery rate $\pi_r$ for the packet-zeroing strategy. The figure shows an interesting and nonintuitive fact that for a fixed recovery probability $\pi_r$, the $\mathscr{H}_\infty$ norm is almost not affected by the failure probability $\pi_f$. A similar observation was made in Geromel et al. (2009).

Figure 4.9-b depicts the worst-case quadratic cost versus the failure rate for each of the forward and backward channels in first subsystem. The channels which are assumed to be Bernoulli type. Each curve is obtained by varying corresponding failure probability while assuming that all the other channels are failure-free. It is seen that sensitivity of the worst-case quadratic cost on the failure probability varies per channel. The packet-zeroing strategy is has equal or better performance compared to packet-holding strategy. Figures 4.9-c,d shows a similar observations for the second and third subsystem channels.

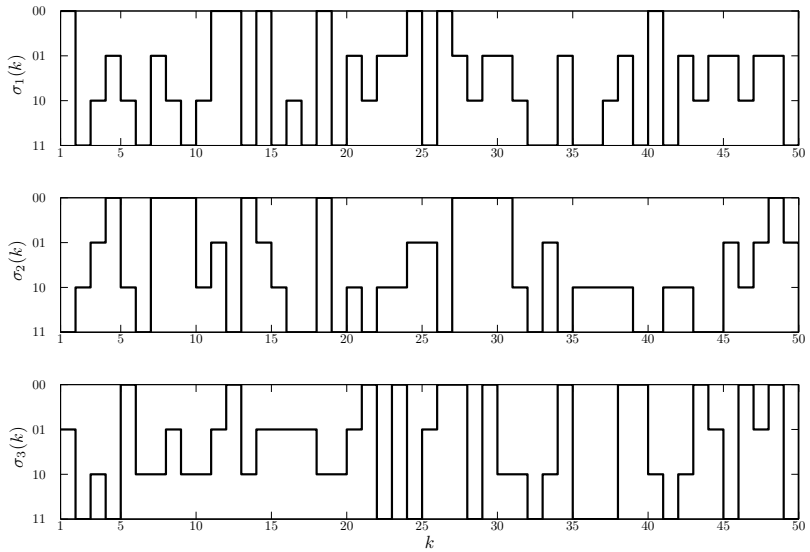


Figure 4.7: Sample packet-loss Markovian switching signal in the networked large-scale system in Example II. Note that '00' denotes complete failure, while '11' denotes complete success.

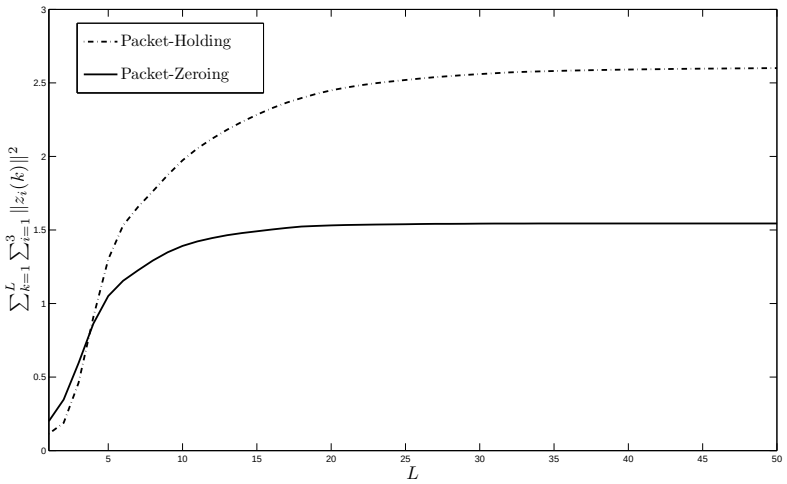


Figure 4.8: The running quadratic cost of the closed-loop large-scale with packet-zeroing and packet-holding controllers averaged over 1000 iterations. Note $L$ denotes time.

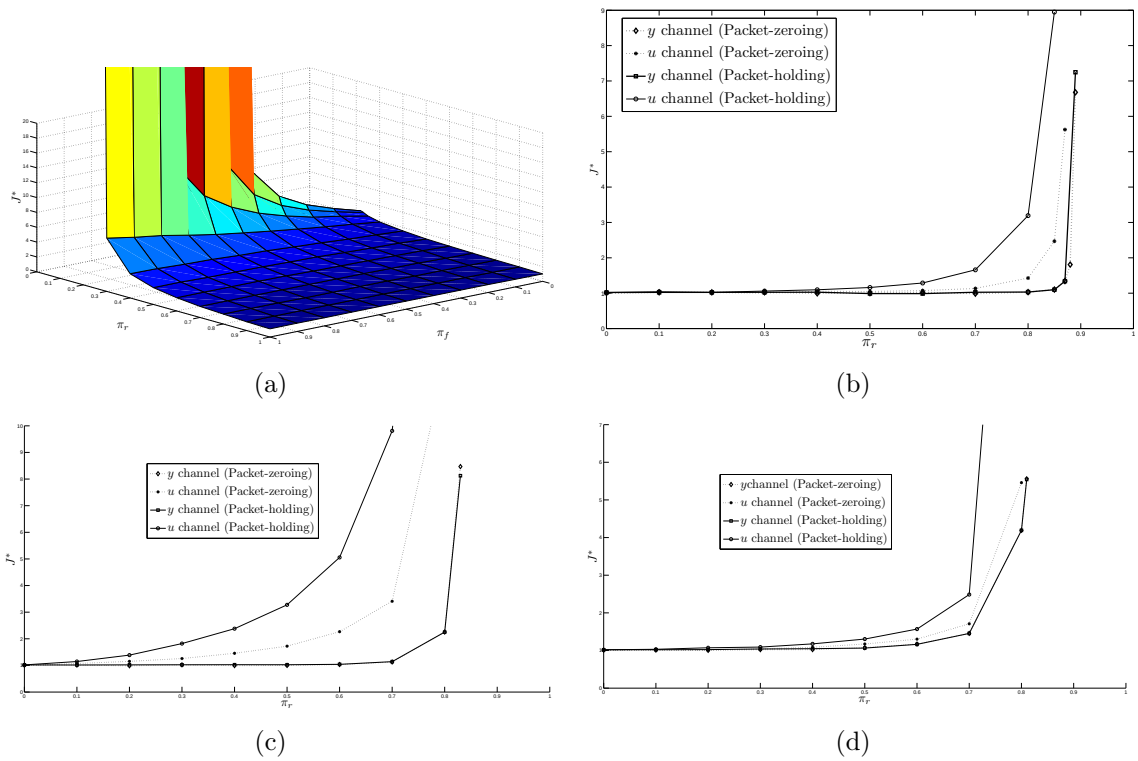


Figure 4.9: (a) The optimal worst-case quadratic cost versus the probabilities of failure and recovery for the packet-zeroing strategy, (b) optimal worst-case quadratic cost comparison between the strategies of packet-zeroing and packet-holding versus the probability of failure in the forward and backward channel for the first subsystem, (c) same as (b) but for the second subsystem, (d) same as (b) but for the third subsystem.

## 4.6 Conclusions and Future Work

Algorithms of the dynamic output feedback control problem were developed in this chapter in a setup similar to the previous chapters, i.e $\mathscr{H}_\infty$ control of interconnected control systems with packet losses, and the corresponding problem of guaranteed cost control design. The system was modeled as an interconnected DMJLS with norm-bounded interactions. We provided necessary and sufficient rank-constrained LMI conditions for the synthesis of controllers, and we have extended the results to local mode-dependent controllers. The simulation results showed a comparison between the packet-holding and packet-zeroing strategies, where later one was superior in this example. An analytical comparison between packet zeroing and packet holding is a topic of future work.

Furthermore, the uncertainty structure can be made richer by considering sum-quadratic constraints instead of norm-bounded uncertainties where the corresponding stability notion used in this case is called Absolute stability (Moheimani et al., 1995). Also, our results can be extended easily to accommodate norm-bounded uncertainties in the subsystems' matrices.

# 5 Chapter

# Decentralized $\mathscr{H}_\infty$ - Estimation With Packet Losses

## 5.1 Introduction

The problem of state estimation is one of the classical problems in control theory and signal processing. In many aspects, it is considered as the dual problem to the control problem. However, because of the coupling constants between the subsystems in our case, the resulting LMIs won't be simply a dual to the corresponding state feedback case, and they needs some extra work. In this chapter, we consider the problem of decentralized estimation of discrete-time interconnected DMJLs with norm-bounded interconnections. We design mode-dependent decentralized $\mathscr{H}_\infty$ -estimators that quadratically stabilize the error system and guarantee a given disturbance attenuation level. The estimation gains are derived with necessary and sufficient rank-constrained linear matrix inequality conditions. Results are provided also for local mode-dependent estimators. Estimator synthesis is done using a cone-complementarity linearization algorithm for the rank-constraints. The results are illustrated by example. Because of the practicality of local mode-dependent estimators, synthesis procedures are provided for this kind of estimators.

The developed theorems are applied to the problem of decentralized filtering of discrete-time interconnected systems with local controllers communicating with their subsystems over lossy communication channels. Assuming a Gilbert-Elliot model for packet losses, the networked control system can be formulated as Markovian jump linear system.

Most of the work in he literature has been done for distributed[1] estimation schemes

[1]By distributed we mean that the estimators can communicate with each others and share information, which is not possible in a decentralized setup.

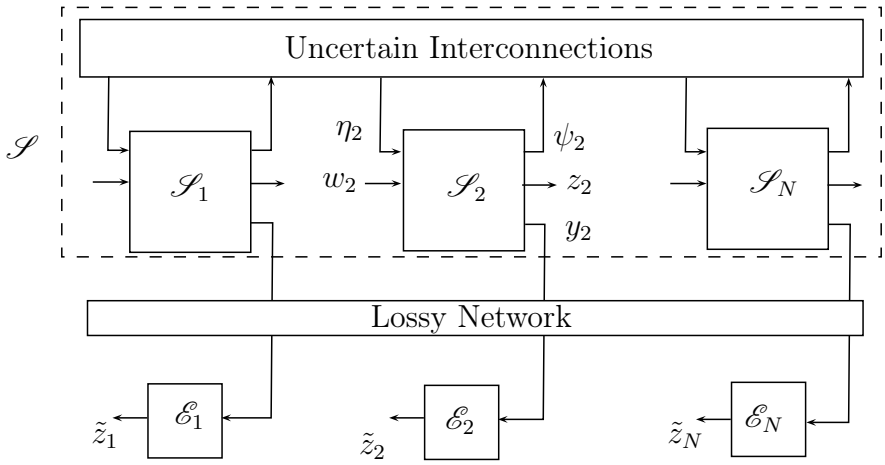


Figure 5.1: Block diagram of the decentralized NCS for the estimation problem.

Stanković et al. (2009), Chiuso et al. (2011). To the best of our knowledge, this is the first work, that considers the synthesis of *decentralized* estimation laws for large-systems with stochastic packet-losses. Furthermore, the problem of decentralized estimation of MJLSs has not been investigated yet.

## 5.2 Interconnected Networked Systems with Packet Losses

Consider Figure 5.1, let $\mathscr{S}$ be composed of the subsystems $\mathscr{S}_i$ be described as:

$$x_i(k+1) = A_i x_i(k) + F_i w_i(k) + \textstyle\sum_{\nu \neq i} \Gamma_{xi\nu}(k) x_\nu(k) \tag{5.1}$$

$$y_i(k) = G_i x_i(k) + L_i w_i(k) + \textstyle\sum_{\nu \neq i} \Gamma_{yi\nu}(k) x_\nu(k) \tag{5.2}$$

$$z_i(k) = C_i x_i(k) \tag{5.3}$$

where $x_i \in \mathbb{R}^{n_i}$,$y_i \in \mathbb{R}^{o_i}$,$w_i \in \mathbb{R}^{\rho_i}$ and $z_i \in \mathbb{R}^{v_i}$ are local state, measured output, disturbance and regulated variables, respectively.The interaction matrices $\Gamma_{xij}, \Gamma_{yij}(k)$ are structured as:

$$[\Gamma_{xij}(k) \;\; \Gamma_{yij}(k)] = [E_i \;\; K_i]\Delta_{ij}(k) H_j \tag{5.4}$$

where $\Delta_{ij} \in \mathbb{R}^{r \times s}$ are time-varying and known only to satisfy the norm-bound: $\sum_{\nu \neq i} \Delta_{i\nu}(k)\Delta_{i\nu}^T(k) \leq I$. We use the notation $\eta_i(k) = \sum_{\nu \neq i} \Delta_{i\nu}(k) H_\nu x_\nu(k)$.

Figure 5.1 shows the position of the communication channel between the subsystems and the estimators. Each channel is assumed to consist of $o_i$ independent communication channels where $o_i$-subsystem's outputs are sent separately to local estimators.[2]. Each communication

[2]The formulation applies easily to the case of states grouped into fewer number of channels.

channel is assumed to be a stochastic switch which is described by a two-state Markov chains $\theta_{ij}(k) \in \{0,1\}$, $j = 1,..,o_i$, with the failure rate: $\Pr(\theta_{ij}(k) = 0|\theta_{ij}(k-1) = 1)$, and the recovery rate: $\Pr(\theta_{ij}(k) = 1|\theta_{ij}(k-1) = 0)$. This model is called the *Gilbert-Elliot erasure model*. The special case of the sum of recovery and failure rates equalling to 1 is called *Bernoulli erasure model*.

We consider two possible ways of handling packet losses:

1. *Zeroing the Packet:* if a packet is lost, it is assumed to be zero. This assumption enables us to design the estimators with advantage of no extra dynamics.
   Assume the we have $\kappa_i$ communication channels per subsystem, which means that augmented Markov chain $\sigma_i(k)$ has $M_i = 2^{\kappa_i}$ states. As a result, each subsystem can be written as a discrete-time Markovian jump system (DMJLS):

$$x_i(k+1) = A_i x_i(k) + E_i \eta_i(k) + F_i w_i(k) \tag{5.5}$$
$$z_i(k) = C_i x_i(k) + D_i u_i(k) \tag{5.6}$$
$$y_i(k) = \bar{G}_i(\sigma_i(k)) x_i(k) + \bar{L}_i(\sigma_i(k)) w_i(k) + \bar{K}_i(\sigma_i(k)) \eta_i(k) \tag{5.7}$$

   where $\bar{G}(\sigma_i(k)) = \Theta_i(\sigma_i(k))G_i, , \bar{L}(\sigma_i(k)) = \Theta_i(\sigma_i(k))L_i, , \bar{K}(\sigma_i(k)) = \Theta_i(\sigma_i(k))K_i$, $\Theta_i = \mathrm{diag}[\theta_{i1}...\theta_{1n_i}]$.

2. *Holding the Packet:* If a packet is lost, then we replace it by the previous packet. We consider the augmented dynamics with the state $v_i(k) = [x_i^T(k) \;\; \tilde{y}_i^T(k)]^T$:

$$v_i(k+1) = \bar{A}_i(\sigma_k) v_i(k) + \bar{F}_i(\sigma_k) w_i(k) + \bar{E}_i(\sigma_i(k)) \eta_i(k) \tag{5.8}$$
$$z_i(k) = [C_i \;\; 0] v_i(k) \tag{5.9}$$
$$y_i(k) = [\Theta_i(\sigma_i(k))G_i \;\; I - \Theta_i(\sigma_i(k))] v_i(k) + \Theta_i(\sigma_i(k)) L_i(\sigma_k) w_i(k) + \Theta_i(\sigma_i(k)) K_i(\sigma_i(k)) \eta_i(k) \tag{5.10}$$

   where

$$\bar{A}_i(\sigma_i(k)) = \begin{bmatrix} A_i & 0 \\ \Theta_i(\sigma_i(k))G_i & I - \Theta_i(\sigma_i(k)) \end{bmatrix}, \bar{F}_i(\sigma_i(k)) = \begin{bmatrix} F_i \\ \Theta_i(\sigma_i(k))L_i \end{bmatrix}, \bar{E}_i(\sigma_i(k)) = \begin{bmatrix} E_i \\ \Theta_i(\sigma_i(k))K_i \end{bmatrix}$$

Note that we have formulated the problem in both ways as a DMJLS problem. Therefore, we will formulate the decentralized estimation of DMJLS in the next section. The local mode-dependent estimation, in section IV, will be applied to the presented NCS system.

## 5.3 System Description and Problem Formulation

Consider a large-scale system $\mathscr{S}$ composed of $N$ interconnected discrete-time Markovian jump linear subsystems $\{\mathscr{S}_i\}_{i=1}^N$. The subsystem $\mathscr{S}_i$ is given as:

$$x_i(k+1) = A_i(\sigma_k)x_i(k) + F_i(\sigma_k)w_i(k) + \textstyle\sum_{\nu\neq i}\Gamma_{xi\nu}(k)x_\nu(k) \tag{5.11}$$

$$y_i(k) = G_i(\sigma_k)x_i(k) + L_i(\sigma_k)w_i(k) + \textstyle\sum_{\nu\neq i}\Gamma_{yi\nu}(\nu)x_\nu(k) \tag{5.12}$$

$$z_i(k) = C_i(\sigma_k)x_i(k) \tag{5.13}$$

where $x_i \in \mathbb{R}^{n_i}$, $y_i \in \mathbb{R}^{o_i}$,$w_i \in \mathbb{R}^{\rho_i}$ and $z_i \in \mathbb{R}^{v_i}$ are local state, measured output, disturbance and regulated variables, respectively. The interaction matrices $\Gamma_{xij}(k), \Gamma_{yij}(k)$ are structured as:

$$[\Gamma_{ijx}(k) \;\; \Gamma_{ijy}(k)] = [E_i(\sigma_k) \;\; K_i(\sigma_k)]\Delta_{ij}(k)H_j(\sigma_k) \tag{5.14}$$

where $\Delta_{ij} \in \mathbb{R}^{r\times s}$ are time-varying and known only to satisfy the norm-bound:

$$\sum_{\nu\neq i}\Delta_{i\nu}(k)\Delta_{i\nu}^T(k) \leq I \tag{5.15}$$

Note that if we use the terminology that $\eta_i(k) = \sum_{\nu\neq i}\Delta_{i\nu}(k)H_\nu(\sigma_k)x_\nu(k)$ is an interaction signal, then the above bound is equivalent to

$$\|\eta_i(k)\|^2 \leq \sum_{\nu\neq i}\|\psi_\nu(k)\|_2^2 \triangleq \sum_{\nu\neq i}\|H_\nu(\sigma_k)x_\nu(k)\|_2^2 \tag{5.16}$$

If an interaction signal $\eta_i(k) \in \ell_2$ satisfy the above bound, it is said to be *admissible*. The set of all admissible interaction signals for $\mathscr{S}$ is denoted by $\Xi$.

The Markov chain $\sigma_k \in \{1,..,M\}$ is a sequence of random variables with the transition probabilities $\pi_{ij} = \Pr[\sigma_{k+1} = i|\sigma_k = j]$.

The mode-dependent decentralized estimator is considered in the following form:

$$\xi_i(k+1) = \tilde{A}_i(\sigma_k)\xi_i(k) + \tilde{B}_i(\sigma_k)y_i(k) \tag{5.17}$$

$$\tilde{z}_i(k+1) = \tilde{C}_i(\sigma_k)\xi_i(k) + \tilde{D}_i(\sigma_k)y_i(k) \tag{5.18}$$

We assume that the pairs $(A_i(\sigma_k), G_i(\sigma_k)), i = 1,...,N$ are stochastically detectable (Costa et al., 2005).

Let $\zeta_i(k) = [x_i^T(k) \;\; \xi_i^T(k)]^T$ and the error $e_i(k) = z_i(k) - \tilde{z}_i(k)$. We get the following

combined system-estimator dynamics from (5.11), (5.17):

$$\begin{aligned} \mathscr{E}_i: \quad \zeta_i(k+1) &= \hat{A}_i(\sigma_k)\zeta_i(k) + \hat{E}_i(\sigma_k)\eta_i(k) + \hat{F}_i(\sigma_k)w_i(k) \\ e_i(k) &= \hat{C}_i(\sigma_k)\zeta_i(k) + \hat{J}_i(\sigma_k)\eta_i(k) + \hat{D}_i(\sigma_k)w_i(k) \end{aligned} \tag{5.19}$$

where $\hat{J}_{ij} = -\tilde{D}_{ij}K_{ij}$, $\hat{D}_{ij} = -\tilde{D}_{ij}L_{ij}$, and

$$\hat{A}_{ij} = \begin{bmatrix} A_{ij} & 0 \\ \tilde{B}_{ij}G_{ij} & \tilde{A}_{ij} \end{bmatrix}, \hat{E}_{ij} = \begin{bmatrix} E_{ij} \\ \tilde{B}_{ij}K_{ij} \end{bmatrix}, \hat{F}_{ij} = \begin{bmatrix} F_{ij} \\ \tilde{B}_{ij}L_{ij} \end{bmatrix}, \hat{C}_i(\sigma_k) = \begin{bmatrix} C_{ij} & D_{ij}\tilde{C}_{ij} \end{bmatrix} \tag{5.20}$$

The large-scale system composed of $\{\mathscr{E}_i\}$ is denoted by $\mathscr{E}$.

We are ready to pose our problem

**Definition 5.1** The large-scale system $\mathscr{S}$ composed of subsystems $\{\mathscr{S}_i\}$ (5.11) with (5.16) is said to be quadratically stochastically observable with disturbance attenuation level $\gamma$ via decentralized estimator (5.17) if there exists $\{\tilde{A}_{ij}\}, \{\tilde{B}_{ij}\}, \{\tilde{C}_{ij}\}, \{\tilde{D}_{ij}\}$ such that large scale system $\mathscr{E}$ composed of augmented subsystems $\{\mathscr{E}_i\}$ (5.19) satisfies $\|\mathscr{E}_{zw}\|_\infty < \gamma$ for all $\eta \in \Xi$.

Our approach will be to convert the problem into local $\mathscr{H}_\infty$ filtering problems for the subsystems with scaling parameters for the interconnections. Therefore, we define the following scaled subsystems:
Let $\{\tau_i\} > 0, \gamma > 0$ be given, then we write:

$$\begin{aligned} \zeta_i(k+1) &= \hat{A}_i(\sigma_k)\zeta_i(k) + \sqrt{\tau_i}\hat{E}_i(\sigma_k)\bar{\eta}_i(k) + \gamma^{-1}\hat{F}_i(\sigma_k)\bar{w}_i(k) \\ \bar{e}_i(k) &= \begin{bmatrix} \hat{C}_i(\sigma_k) \\ \left(\sum_{\nu\neq i}\tau_\nu^{-1}\right)^{1/2}\hat{H}_i(\sigma_k) \end{bmatrix}\zeta_i(k) + \sqrt{\tau_i}\begin{bmatrix} \hat{J}_i(\sigma_k) \\ 0 \end{bmatrix}\bar{\eta}_i(k) + \gamma^{-1}\begin{bmatrix} \hat{D}_i(\sigma_k) \\ 0 \end{bmatrix}\bar{w}_i(k) \end{aligned} \tag{5.21}$$

where $\hat{H}_{ij} = [H_{ij}\ 0]$. The large-scale system composed of subsystems (5.21) can be written as:

$$\begin{aligned} \zeta(k+1) &= \hat{A}(\sigma_k)\zeta(k) + \tilde{T}_1^{1/2}\hat{E}(\sigma_k)\bar{\eta}(k) + \gamma^{-1}\hat{F}(\sigma_k)\bar{w}(k) \\ \bar{e}(k) &= \begin{bmatrix} \hat{C}_i(\sigma_k) \\ \tilde{T}_2^{1/2}\hat{H}(\sigma_k) \end{bmatrix}\zeta(k) + \tilde{T}_1^{1/2}\begin{bmatrix} \hat{J}_i(\sigma_k) \\ 0 \end{bmatrix}\bar{\eta}(k) + \gamma^{-1}\begin{bmatrix} \hat{D}(\sigma_k) \\ 0 \end{bmatrix}\bar{w}(k) \end{aligned} \tag{5.22}$$

where $\tilde{T}_1 = \mathrm{diag}[\tau_1^{-1}I \ldots \tau_N^{-1}I]$, $\tilde{T}_2 = \mathrm{diag}\left[\left(\sum_{\nu\neq 1}\tau_\nu^{-1}\right)I \ldots \left(\sum_{\nu\neq N}\tau_\nu^{-1}\right)I\right]$, $\hat{A}(\sigma_k) = \mathrm{diag}[\hat{A}_1(\sigma_k) \ldots \hat{A}_N(\sigma_k)]$, $\hat{C}(\sigma_k) = \mathrm{diag}[\hat{C}_1(\sigma_k) \ldots \hat{C}_N(\sigma_k)]$, $\hat{E}(\sigma_k) = \mathrm{diag}[\hat{E}_1(\sigma_k) \ldots \hat{E}_N(\sigma_k)]$, $\hat{F}(\sigma_k) = \mathrm{diag}[\hat{F}_1(\sigma_k) \ldots \hat{F}_N(\sigma_k)]$, $\hat{J}(\sigma_k) = \mathrm{diag}[\hat{J}_1(\sigma_k) \ldots \hat{J}_N(\sigma_k)]$, $\hat{D}(\sigma_k) = \mathrm{diag}[\hat{D}_1(\sigma_k) \ldots \hat{D}_N(\sigma_k)]$,

and $\hat{H}(\sigma_k) = \text{diag}[\hat{H}_1(\sigma_k) \ ... \ \hat{H}_N(\sigma_k)]$.

## 5.4 Decentralized $\mathscr{H}_\infty$ Estimator Design Via Linear Matrix Inequalities

We state the main theorem which provides necessary and sufficient conditions for quadratic observability with a given disturbance attenuation level:

**Theorem 5.1** The large-scale system $\mathscr{E}$ is quadratically observable with a disturbance attenuation level $\gamma$ if and only if there exist symmetric matrices $\{X_{ij}\}, \{Y_{ij}\}$, matrices $\{W_{ij}\}, \{R_{ij}\}\{S_{ij}\}, \{T_{ij}\}$ and constants $\{\tau_i\}, \{\tilde{\tau}_i\}$, $i = 1, .., N$, $j, \ell = 1, ..., M$, satisfying the rank-constrained LMIs:

$$\left[\begin{array}{cccc|cccc} Y_{ij} & \bullet & \bullet & \bullet & \bullet & \bullet & \bullet & \bullet \\ Y_{ij} & X_{ij} & \bullet & \bullet & \bullet & \bullet & \bullet & \bullet \\ 0 & 0 & \tilde{\tau}_i I & \bullet & \bullet & \bullet & \bullet & \bullet \\ 0 & 0 & 0 & \gamma^2 I & \bullet & \bullet & \bullet & \bullet \\ \hline \bar{Y}_{ij}A_{ij} & \bar{Y}_{ij}A_{ij} & \bar{Y}_{ij}E_{ij} & \bar{Y}_{ij}F_{ij} & \bar{Y}_{ij} & \bullet & \bullet & \bullet \\ \bar{X}_{ij}A_{ij} + R_{ij}G_{ij} + W_{ij} & \bar{X}_{ij}A_{ij} + R_{ij}G_{ij} & \bar{X}_{ij}E_{ij} + R_{ij}K_{ij} & \bar{X}_{ij}F_{ij} + R_{ij}L_{ij} & \bar{Y}_{ij} & \bar{X}_{ij} & \bullet & \bullet \\ C_{ij} - T_{ij}G_{ij} - S_{ij} & C_{ij} - T_{ij}G_{ij} & -T_{ij}K_{ij} & -T_{ij}L_{ij} & 0 & 0 & I & \bullet \\ \tilde{H}_{ij} & \tilde{H}_{ij} & 0 & 0 & 0 & 0 & 0 & \tilde{I}_i \end{array}\right] > 0 \tag{5.23}$$

$$\begin{bmatrix} \tilde{\tau}_i & 1 \\ 1 & \tau_i \end{bmatrix} \geq 0, \text{rank} \begin{bmatrix} \tilde{\tau}_i & 1 \\ 1 & \tau_i \end{bmatrix} \leq 1 \tag{5.24}$$

where $\bar{X}_{ij} = \sum_{\ell=1}^{M} \pi_{j\ell} X_{i\ell}, \bar{Y}_{ij} = \sum_{\ell=1}^{M} \pi_{j\ell} Y_{ij\ell}$. Furthermore, the corresponding mode-dependent estimator matrices are

$$\begin{bmatrix} \tilde{A}_{ij} & \tilde{B}_{ij} \\ \tilde{C}_{ij} & \tilde{D}_{ij} \end{bmatrix} = \begin{bmatrix} \bar{Y}_{ij} - \bar{X}_{ij} & 0 \\ 0 & I \end{bmatrix}^{-1} \begin{bmatrix} W_{ij} & R_{ij} \\ -S_{ij} & T_{ij} \end{bmatrix} \tag{5.25}$$

***Proof:*** Refer to the Appendix. ■

**Remark 5.1** In the special case of centralized estimation ($N = 1$), Theorem 5.1 reduces to the result in Gonçalves et al. (2009).

**Remark 5.2** Theorem 5.1 has a nonconvex rank constraint which can be handled by the method described in §4.3.5.

### 5.4.1 Proof of Theorem 5.1

**Sufficiency**

Assume that (5.23), (5.24) are satisfied. Note that the rank constraints implies $\tilde{\tau}_i = \tau_i^{-1} > 0$. Using the same algebraic transformations in Gonçalves et al. (2009) and the proof of Lemma 2.1, it can be easily shown that the following matrix inequality holds:

$$\begin{bmatrix} P_{ij} & 0 & 0 \\ 0 & \tau_i^{-1} I & 0 \\ 0 & 0 & \gamma^2 I \end{bmatrix} - \begin{bmatrix} \begin{pmatrix} \hat{A}_{ij}^T \bar{P}_{ij} \hat{A}_{ij} + \hat{C}_{ij}^T \hat{C}_{ij} \\ + \left(\sum_{\nu \neq i} \tau_\nu^{-1}\right) \hat{H}_{ij}^T \hat{H}_{ij} \end{pmatrix} & \bullet & \bullet \\ \hat{E}_{ij}^T \bar{P}_{ij} \hat{A}_{ij} + \hat{J}_{ij}^T \hat{C}_{ij} & \hat{E}_{ij}^T \bar{P}_{ij} \hat{E}_{ij} + \hat{J}_{ij} \hat{J}_{ij} & \bullet \\ \hat{F}_{ij}^T \bar{P}_{ij} \hat{A}_{ij} + \hat{D}_{ij}^T \hat{C}_{ij} & \hat{F}_{ij}^T \bar{P}_{ij} \hat{E}_{ij} + \hat{D}_{ij}^T \hat{J}_{ij} & \hat{F}_{ij}^T \bar{P}_{ij} \hat{F}_{ij} + \hat{D}_{ij}^T \hat{D}_{ij} \end{bmatrix} > 0 \tag{5.26}$$

where $P_{ij} = \begin{bmatrix} X_{ij} & \bullet \\ Y_{ij} - X_{ij} & X_{ij} - Y_{ij} \end{bmatrix}$, and the matrices were defined in (5.20).

Define $P_j = \text{diag}[P_{1j} \ ... \ P_{1N}]$. Using similar argument to the proof in §3.3.3, the following inequality holds:

$$\begin{bmatrix} \zeta \\ \eta \\ w \end{bmatrix}^T \left( \begin{bmatrix} \hat{A}_j & \hat{E}_j & \hat{F}_j \\ \hat{C}_j & \hat{J}_j & \hat{D}_j \end{bmatrix}^T \begin{bmatrix} \bar{P}_j & 0 \\ 0 & I \end{bmatrix} \begin{bmatrix} \hat{A}_j & \hat{E}_j & \hat{F}_j \\ \hat{C}_j & \hat{J}_j & \hat{D}_j \end{bmatrix} - \begin{bmatrix} P_j & 0 & 0 \\ 0 & 0 & 0 \\ 0 & 0 & \gamma^2 I \end{bmatrix} \right) \begin{bmatrix} \zeta \\ \eta \\ w \end{bmatrix} < 0 \tag{5.27}$$

Hence, it follows from the bounded real lemma (Lemma 2.1) that $\|\mathscr{E}_{zw}\| < \gamma$ for all $\eta \in \Xi$.

■

**Necessity**

Using similar argument to the proof in §3.3.3, the following $\mathscr{H}_\infty$ norm bound holds

$$\sup_{\eta_i, w_i, \sigma_0} \frac{\|\bar{e}_i(k)\|_2^2}{\|\bar{w}_i(k)\|_2^2} < 1 \tag{5.28}$$

This implies that estimator (5.17) achieves a unitary $\mathscr{H}_\infty$ -norm for every auxiliary subsystem (5.21). Thus, by theory of $\mathscr{H}_\infty$ -estimation of DMJLSs (Gonçalves et al., 2009), the LMIs (5.23), (5.24) hold. ■

## 5.5 The case of Markov chain satisfying $\pi_{ij} = \pi_j$

The conditions of Theorem (5.1) will simplify considerably if the Markov chain satisfy the condition that $\forall i, \pi_{ij} = \pi_j$. This type of conditions is satisfied in a networked system with

Bernoulli erasure model. This assumption will reduce the number of LMIs from $MN$ to $N$ only.

**Theorem 5.2** The large-scale system $\mathscr{E}$ is quadratically observable with a disturbance attenuation level $\gamma$ with the condition $\pi_{ij} = \pi_j$ if and only if there exist symmetric matrices $\{X_i\}, \{Y_i\}$, matrices $\{W_{ij}\}, \{R_{ij}\}\{S_{ij}\}, \{T_{ij}\}$ and constants $\{\tau_i\}, \{\tilde{\tau}_i\}$, $i = 1, .., N$, $j, \ell = 1, ..., M$, satisfying the rank-constrained LMIs:

$$\left[\begin{array}{c|ccc} \Sigma_i & \bullet & \dots & \bullet \\ \hline \sqrt{\pi_1}\,\Psi_{i1} & \Pi_i & \dots & \bullet \\ \vdots & \vdots & \ddots & \vdots \\ \sqrt{\pi_M}\,\Psi_{iM} & 0 & \dots & \Pi_i \end{array}\right] > 0, \begin{bmatrix} \tilde{\tau}_i & 1 \\ 1 & \tau_i \end{bmatrix} \geq 0, \operatorname{rank} \begin{bmatrix} \tilde{\tau}_i & 1 \\ 1 & \tau_i \end{bmatrix} \leq 1 \tag{5.29}$$

where $\Sigma_i = \operatorname{diag}[Z_i \ \tilde{\tau} I \ \gamma^2 I]$, $\Pi_i = \operatorname{diag}[Z_i \ I \ \tilde{I}_i]$, and

$$Z_i = \begin{bmatrix} Y_i & Y_i \\ Y_i & X_i \end{bmatrix}, \Psi_{ij} = \begin{bmatrix} Y_i A_{ij} & Y_i A_{ij} & Y_i E_{ij} & Y_i F_{ij} \\ X_i A_{ij} + R_{ij} G_{ij} + W_{ij} & X_i A_{ij} + R_{ij} G_{ij} & X_i E_{ij} + R_{ij} K_{ij} & X_i F_{ij} + R_{ij} L_{ij} \\ C_{ij} - T_{ij} G_{ij} - S_{ij} & C_{ij} - T_{ij} G_{ij} & -T_{ij} K_{ij} & -T_{ij} L_{ij} \\ \tilde{H}_{ij} & \tilde{H}_{ij} & 0 & 0 \end{bmatrix}$$

Furthermore, the corresponding mode-dependent observer gain is given by (5.25).

***Proof:*** The proof follows the lines of the proof of Theorem 3.1, except that it uses Lemma 2.2 instead of Lemma 2.1. ■

## 5.6 Local-Mode Dependent Decentralized Estimators

In this section, we give sufficient conditions for the existence of local-mode dependent decentralized estimators. Compared to the global-mode dependent estimator in the previous subsection, it has some advantages. First, the global mode of the large-scale system does not need to be available to all estimators, which poses a communication burden in the global mode-dependent case. Second, local estimators will be switching between substantially smaller number of modes compared to the global mode-dependent case.
We assume that the local subsystems are Markovian also, which enables us to view the local mode-dependent estimators as cluster observation estimators (do Val et al., 2002).

Suppose that every subsystem $\mathscr{S}_i$ is associated with a local Markov chain $\sigma_i(k)$ with $M_i$

states.

$$x_i(k+1) = A_i(\sigma_i(k))x_i(k) + F_i(\sigma_i(k))w_i(k) + \sum_{\nu\neq i}\Lambda_{xi\nu}(j)x_\nu(k) \tag{5.30}$$

$$y_i(k) = G_i(\sigma_i(k))x_i(k) + L_i(\sigma_i(k))w_i(k) + \sum_{j\neq i}\Lambda_{yi\nu}(\nu)x_j(k) \tag{5.31}$$

$$z_i(k) = C_i(\sigma_i(k))x_i(k) \tag{5.32}$$

with (5.14), (5.16) defined accordingly.
We consider a *local* mode-dependent decentralized state-feedback of the form:

$$\xi_i(k+1) = A_i(\sigma_i(k))\xi_i(k) + \tilde{B}_i(\sigma_i(k))y_i(k) \tag{5.33}$$

$$\tilde{z}_i(k+1) = C_i(\sigma_i(k))\xi_i(k) + \tilde{D}_i(\sigma_i(k))y_i(k)\xi_i(k)) \tag{5.34}$$

We define the global Markov state $\sigma(k) = (\sigma_1(k)\dots\sigma_N(k))$. The transition matrix for the augmented state can be computed as: $\Lambda = \bigotimes_{i=1}^{N}\Lambda_i$, where $\Lambda_i$ is the transition matrix of $\sigma_i(k)$ and $\otimes$ denotes the Kronecker product. Note that if consider the large-scale system as a whole, then the $i^{\text{th}}$ local estimator (5.33) observes the *cluster* of states $\mathscr{C}_{i\nu}$ defined as: $\mathscr{C}_{i\nu} = \{(\sigma_1,..,\sigma_N) : \sigma_i(k) = \nu\}$, thus $(\sigma_1(k)\dots\sigma_N(k))$ are considered as one cluster for a certain $\sigma_i(k)$.

**Corollary 5.1** The large-scale error system is quadratically observable with a disturbance attenuation level $\gamma$ via local mode-dependent estimators (5.33) if it satisfies LMIs (5.23), (5.24) with the equality constraints:

$$Y_{ij} = X_{ij} + Z_{i\nu}, \tilde{W}_{ij} = W_{i\nu}, \tilde{R}_{ij} = R_{i\nu}, \tilde{S}_{ij} = S_{i\nu}, \tilde{T}_{ij} = \tilde{T}_{i\nu} \tag{5.35}$$

for all $j \in \mathscr{C}_{i\nu}, \nu = 1, ..., M_i$, where $Z_{i\nu} > 0$.

If we have also the advantage that state-space of the local subsystems is invariant in each cluster, as in our networked context, this enables us to state the following corollary:

**Corollary 5.2** The large-scale system $\mathscr{E}$ is quadratically observable with a disturbance attenuation level $\gamma$ via local-mode dependent estimator if there exist symmetric matrices $\{X_{i\nu}\}, \{Y_{i\nu}\}$, matrices $\{W_{i\nu}\}, \{R_{i\nu}\}\{S_{i\nu}\}, \{T_{i\nu}\}$ and constants $\{\tau_i\}, \{\tilde{\tau}_i\}$, $i = 1, .., N$, $j, \ell =$

$1, ..., M$, satisfying the rank-constrained LMIs:

$$\left[\begin{array}{cccc|cccc} Y_{i\nu} & \bullet & \bullet & \bullet & \bullet & \bullet & \bullet & \bullet \\ Y_{i\nu} & X_{i\nu} & \bullet & \bullet & \bullet & \bullet & \bullet & \bullet \\ 0 & 0 & \tilde{\tau}_i I & \bullet & \bullet & \bullet & \bullet & \bullet \\ 0 & 0 & 0 & \gamma^2 I & \bullet & \bullet & \bullet & \bullet \\ \hline \bar{Y}_{i\nu}A_{i\nu} & \bar{Y}_{i\nu}A_{i\nu} & \bar{Y}_{i\nu}E_{i\nu} & \bar{Y}_{i\nu}F_{i\nu} & \bar{Y}_{i\nu} & \bullet & \bullet & \bullet \\ \bar{X}_{i\nu}A_{i\nu} + R_{i\nu}G_{i\nu} + W_{i\nu} & \bar{X}_{i\nu}A_{i\nu} + R_{i\nu}G_{i\nu} & \bar{X}_{i\nu}E_{i\nu} + R_{i\nu}K_{i\nu} & \bar{X}_{i\nu}F_{i\nu} + R_{i\nu}L_{i\nu} & \bar{Y}_{i\nu} & \bar{X}_{i\nu} & \bullet & \bullet \\ C_{i\nu} - T_{i\nu}G_{i\nu} - S_{i\nu} & C_{i\nu} - T_{i\nu}G_{i\nu} & -T_{i\nu}K_{i\nu} & -T_{i\nu}L_{i\nu} & 0 & 0 & I & \bullet \\ \tilde{H}_{i\nu} & \tilde{H}_{i\nu} & 0 & 0 & 0 & 0 & 0 & \tilde{I}_i \end{array}\right] > 0 \tag{5.36}$$

$$\begin{bmatrix} \tilde{\tau}_i & 1 \\ 1 & \tau_i \end{bmatrix} \geq 0, \text{rank} \begin{bmatrix} \tilde{\tau}_i & 1 \\ 1 & \tau_i \end{bmatrix} \leq 1 \tag{5.37}$$

Furthermore, the corresponding mode-dependent estimator matrices are given as

$$\begin{bmatrix} \tilde{A}_{i\nu} & \tilde{B}_{i\nu} \\ \tilde{C}_{i\nu} & \tilde{D}_{i\nu} \end{bmatrix} = \begin{bmatrix} \bar{Y}_{ij} - \bar{X}_{i\nu} & 0 \\ 0 & I \end{bmatrix}^{-1} \begin{bmatrix} W_{i\nu} & R_{i\nu} \\ -S_{i\nu} & T_{i\nu} \end{bmatrix} \tag{5.38}$$

***Proof:*** To establish that (5.23) and (5.24) hold, we define $X_{ij} = X_{i\nu}, Y_{ij} = Y_{i\nu}$ for all $j \in \mathscr{C}_{i\nu}$. Notice that we can convert the dependence on $\nu$ to $j$ in all variables since we have invariant dynamics of $\mathscr{S}_i$ under the $i^{\text{th}}$ cluster. ■

**Remark 5.3** Note that Corollary 5.2, when applicable, gives us a clear computational advantage over Theorem 5.1, since the number of matrix inequalities is $N\sum_{i=1}^{N} M_i$ and $N\prod_{i=1}^{N} M_i$, respectively.

## 5.7 Example and Simulation

In this example, we apply the theory we developed to the design of local mode-dependent decentralized estimators for a large-scale system with measurements sent over a communication channels vulnerable to packet-losses.

We have three subsystems. For every subsystem, the two states transmitted to the estimator are sent over sperate channels. Hence, every local Markov state belong to the set $\{11, 10, 01, 00\}$, where "0" denotes failure and "1" denotes success. The symbol "10" denotes success in the first state transmission, and failure in the second state transmission. We have the following system matrices:

$$A_1 = \begin{bmatrix} 1.043 & -0.1492 \\ 0.08224 & 0.8192 \end{bmatrix}, A_2 = \begin{bmatrix} 0.1165 & 0.8597 \\ -0.5597 & 0.9525 \end{bmatrix}, A_3 = \begin{bmatrix} -0.2197 & 1.802 \\ -0.749 & 1.715 \end{bmatrix}, E_1 = \begin{bmatrix} -0.1108 \\ -0.1777 \end{bmatrix},$$
$$E_2 = \begin{bmatrix} -0.08365 \\ 0.1372 \end{bmatrix}, E_3 = \begin{bmatrix} -0.1607 \\ -0.1109 \end{bmatrix}, F_1 = \begin{bmatrix} -0.2492 \\ 0.2484 \end{bmatrix}, F_2 = \begin{bmatrix} 0.327 \\ -0.2202 \end{bmatrix}, F_3 = \begin{bmatrix} -0.07459 \\ -0.07774 \end{bmatrix},$$
$$C_1 = \begin{bmatrix} -0.3066 & -0.3958 \\ -0.1048 & 0.2966 \end{bmatrix}, C_2 = \begin{bmatrix} 0.669 & -0.7863 \\ 0.9408 & -0.4303 \end{bmatrix}, C_3 = \begin{bmatrix} 0.745 & 0.661 \\ 0.8892 & 0.8272 \end{bmatrix}, H_1 = \begin{bmatrix} 0.02518 \\ 0.02143 \end{bmatrix}^T,$$
$$H_2 = \begin{bmatrix} 0.02971 \\ -0.02605 \end{bmatrix}^T, H_3 = \begin{bmatrix} -0.1875 \\ 0.0976 \end{bmatrix}^T, G_1 = \begin{bmatrix} 0.4848 & 1.289 \\ 1.474 & 0.4589 \end{bmatrix}, G_2 = \begin{bmatrix} -1.076 & 0.2066 \\ -0.3996 & 1.268 \end{bmatrix},$$
$$G_3 = \begin{bmatrix} 1.271 & 1.444 \\ -1.312 & 0.5463 \end{bmatrix}, L_1 = \begin{bmatrix} -0.2485 \\ 0.06367 \end{bmatrix}, L_2 = \begin{bmatrix} 0.1763 \\ 0.1341 \end{bmatrix}, L_3 = \begin{bmatrix} 0.1929 \\ 0.05039 \end{bmatrix}, K_1 = \begin{bmatrix} -0.194 \\ -0.2364 \end{bmatrix},$$
$$K_2 = \begin{bmatrix} 0.2033 \\ 0.08004 \end{bmatrix}, K_3 = \begin{bmatrix} 0.2534 \\ 0.08892 \end{bmatrix}$$

with transition matrices:

$$\Lambda_1 = \begin{bmatrix} 0.1473 & 0.507 & 0.07784 & 0.2678 \\ 0.3129 & 0.3415 & 0.1653 & 0.1804 \\ 0.07002 & 0.2409 & 0.1552 & 0.5339 \\ 0.1487 & 0.1623 & 0.3295 & 0.3596 \end{bmatrix}, \Lambda_2 = \begin{bmatrix} 0.7602 & 0.01888 & 0.2155 & 0.005354 \\ 0.3296 & 0.4495 & 0.09345 & 0.1274 \\ 0.475 & 0.0118 & 0.5007 & 0.01244 \\ 0.206 & 0.2809 & 0.2171 & 0.2961 \end{bmatrix}$$
$$\Lambda_3 = \begin{bmatrix} 0.2982 & 0.06163 & 0.5305 & 0.1096 \\ 0.0481 & 0.3118 & 0.08555 & 0.5546 \\ 0.3298 & 0.06816 & 0.4989 & 0.1031 \\ 0.05319 & 0.3448 & 0.08046 & 0.5216 \end{bmatrix}$$

with initial conditions $x_1(0) = [-0.5 \ -0.5]^T, x_2(0) = [1 \ -1]^T, \ , \ x_2(0) = [1 \ 1]^T \ \sigma_i(0) = 00$. We aim at designing local mode-dependent estimator that has stable error system against admissible uncertain interactions and guarantee disturbance attenuation level of $\gamma^2 = 0.5$. Corollary 5.2 was used successfully to design the estimator gains which are given by:

$$\tilde{A}_{11} = \begin{bmatrix} -0.02303 & -0.06922 \\ 0.0153 & 0.05729 \end{bmatrix}, \tilde{A}_{12} = \begin{bmatrix} -0.2194 & -0.618 \\ 0.3456 & 0.9762 \end{bmatrix}, \tilde{A}_{13} = \begin{bmatrix} 0.7116 & -0.9883 \\ -0.1825 & 0.3022 \end{bmatrix},$$
$$\tilde{A}_{14} = \begin{bmatrix} 1.061 & -0.1625 \\ 0.04702 & 0.8747 \end{bmatrix}, \tilde{A}_{21} = \begin{bmatrix} 0.008654 & -0.003646 \\ -0.0219 & 0.004866 \end{bmatrix}, \tilde{A}_{22} = \begin{bmatrix} 0.3923 & 0.1715 \\ -0.292 & -0.1244 \end{bmatrix},$$
$$\tilde{A}_{23} = \begin{bmatrix} -0.1552 & 0.8035 \\ -0.1772 & 0.7883 \end{bmatrix}, \tilde{A}_{24} = \begin{bmatrix} 0.3101 & 0.6926 \\ -0.4775 & 0.7341 \end{bmatrix}, \tilde{A}_{31} = \begin{bmatrix} -0.1123 & 0.1603 \\ -0.1011 & 0.1443 \end{bmatrix}, \tilde{A}_{32} = \begin{bmatrix} -1.446 & 2.323 \\ -1.191 & 1.913 \end{bmatrix},$$
$$\tilde{A}_{33} = \begin{bmatrix} -0.8654 & 1.153 \\ -1.062 & 1.415 \end{bmatrix}, \tilde{A}_{34} = \begin{bmatrix} -0.2322 & 1.83 \\ -0.7602 & 1.738 \end{bmatrix}, \tilde{B}_{11} = \begin{bmatrix} -0.4432 & 0.9039 \\ 0.7458 & -0.2396 \end{bmatrix}, \tilde{B}_{12} = \begin{bmatrix} 0 & 0.8842 \\ 0 & -0.2051 \end{bmatrix},$$
$$\tilde{B}_{13} = \begin{bmatrix} 0.672 & 0 \\ 0.4529 & 0 \end{bmatrix}, \tilde{B}_{14} = \tilde{B}24 = \tilde{B}34 = \begin{bmatrix} 0 & 0 \\ 0 & 0 \end{bmatrix}, \tilde{B}_{21} = \begin{bmatrix} -0.4201 & 0.7382 \\ 0.2823 & 0.711 \end{bmatrix}, \tilde{B}_{22} = \begin{bmatrix} 0 & 0.5246 \\ 0 & 0.8621 \end{bmatrix},$$
$$\tilde{B}_{23} = \begin{bmatrix} -0.3408 & 0 \\ 0.3767 & 0 \end{bmatrix}, \tilde{B}_{31} = \begin{bmatrix} 0.8464 & 0.9343 \\ 0.6926 & 1.195 \end{bmatrix}, \tilde{B}_{32} = \begin{bmatrix} 0 & -0.9307 \\ 0 & -0.3304 \end{bmatrix}, \tilde{B}_{33} = \begin{bmatrix} 0.4879 & 0 \\ 0.2328 & 0 \end{bmatrix},$$

$$\tilde{C}_{11} = \begin{bmatrix} -0.01309 & -0.02725 \\ 0.006897 & 0.01799 \end{bmatrix}, \tilde{C}_{12} = \begin{bmatrix} -0.1201 & -0.3298 \\ 0.1341 & 0.3739 \end{bmatrix}, \tilde{C}_{13} = \begin{bmatrix} -0.1028 & 0.09919 \\ -0.1381 & 0.197 \end{bmatrix},$$

$$\tilde{C}_{14} = \begin{bmatrix} -0.3062 & -0.3967 \\ -0.1024 & 0.2901 \end{bmatrix}, \tilde{C}_{21} = \begin{bmatrix} 0.03999 & -0.003157 \\ 0.05262 & -0.003865 \end{bmatrix}, \tilde{C}_{22} = \begin{bmatrix} 0.3501 & 0.1512 \\ 0.6608 & 0.2892 \end{bmatrix}, \tilde{C}_{23} = \begin{bmatrix} 0.1519 & -0.6046 \\ 0.08482 & -0.2271 \end{bmatrix},$$

$$\tilde{C}_{24} = \begin{bmatrix} 0.464 & -0.583 \\ 0.7176 & -0.278 \end{bmatrix}, \tilde{C}_{31} = \begin{bmatrix} -0.03368 & 0.04808 \\ -0.04202 & 0.05998 \end{bmatrix}, \tilde{C}_{32} = \begin{bmatrix} -0.8029 & 1.29 \\ -0.9903 & 1.591 \end{bmatrix}, \tilde{C}_{33} = \begin{bmatrix} 0.05649 & -0.07524 \\ 0.05147 & -0.06855 \end{bmatrix},$$

$$\tilde{C}_{34} = \begin{bmatrix} 0.745 & 0.661 \\ 0.8892 & 0.8272 \end{bmatrix}, \tilde{D}_{11} = \begin{bmatrix} -0.2463 & -0.1158 \\ 0.2899 & -0.1776 \end{bmatrix}, \tilde{D}_{12} = \begin{bmatrix} 0 & -0.1287 \\ 0 & -0.1633 \end{bmatrix}, \tilde{D}_{13} = \begin{bmatrix} -0.3971 & 0 \\ 0.07203 & 0 \end{bmatrix},$$

$$\tilde{D}_{14} = \tilde{D}24 = \tilde{D}34 = \begin{bmatrix} 0 & 0 \\ 0 & 0 \end{bmatrix}, \tilde{D}_{21} = \begin{bmatrix} -0.3738 & -0.5497 \\ -0.7356 & -0.2061 \end{bmatrix}, \tilde{D}_{22} = \begin{bmatrix} 0 & -0.7364 \\ 0 & -0.567 \end{bmatrix}, \tilde{D}_{23} = \begin{bmatrix} -0.4434 & 0 \\ -0.7649 & 0 \end{bmatrix},$$

$$\tilde{D}_{31} = \begin{bmatrix} 0.4853 & -0.1142 \\ 0.5983 & -0.1188 \end{bmatrix}, \tilde{D}_{32} = \begin{bmatrix} 0 & -1.187 \\ 0 & -1.441 \end{bmatrix}, \tilde{D}_{33} = \begin{bmatrix} 0.5306 & 0 \\ 0.6456 & 0 \end{bmatrix},$$

with $\tau_1 = 3.4908105, \tau_2 = 5.0540527, \tau_3 = 0.8630947$.

We have applied the decentralized estimators for tracking $z(k)$ for nonzero external input $u_i(k)$ which enters in the same manner to the system and estimator. Figure 5.2 shows a sample trajectory for the closed-loop system with the designed Markovian estimator versus a deterministic estimator design without the consideration of the switching behavior. The disturbance signal was $w_1(k) = a_1 \sin(3k), w_2(k) = a_2 \sin(3k), w_3(k) = a_3 \sin(3k)$, where $a_1, a_2, a_3$ are independent normally distributed random variables. It is seen that the deterministic estimator has poor performance. Figure 5.3 show the corresponding packet-loss switching signals.

We study the effect of the packet-loss rates on the stability and the performance of the previous system. We obtain the optimal $\mathscr{H}_\infty$ performance level via a standard bisection procedure. Since there are 12 probability parameters, we fix some of them to show the effect of the rest. Figure 5.4 depicts the $\mathscr{H}_\infty$ norm versus the failure rate for each of six channels which are assumed to be Bernoulli type. The curve $\Lambda_{11}$, for example, is computed by assuming that $\Lambda_{11}$ represents a Bernoulli channel with failure probability $\pi$, the second channel in subsystem 1 is off, and the other subsystems channels are operating without failures. The curve $\Lambda_i = \Lambda$ represents the case where all channels are Bernoulli type and identically distributed. It is seen that sensitivity of the $\mathscr{H}_\infty$ norm on the failure probability varies per channel. Note that there is no curve corresponding to $\Lambda_{12}$ since the corresponding LMIs were infeasible.

Figure 5.5 shows the case when the six channels are identically distributed Markovian channels with failure rate $\pi_f$ and recovery rate $\pi_r$. The figure shows an interesting and nonintuitive fact that for a fixed recovery probability $\pi_r$, the $\mathscr{H}_\infty$ norm is almost not affected by the failure probability $\pi_f$. A similar observation was made in Geromel et al. (2009).

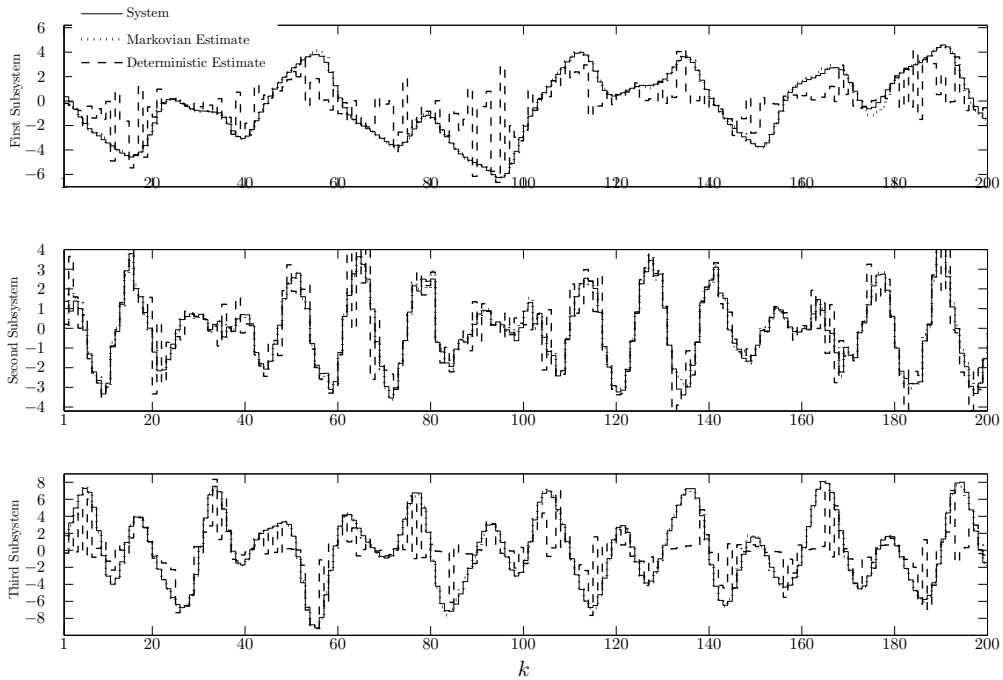


Figure 5.2: Sample state trajectories of networked large-scale control system in the example.

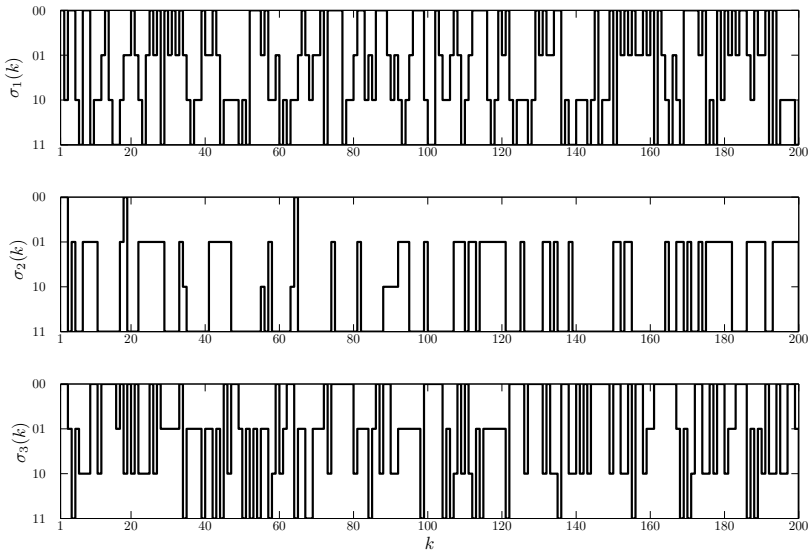


Figure 5.3: Sample packet-loss Markovian switching signal in the networked large-scale system.

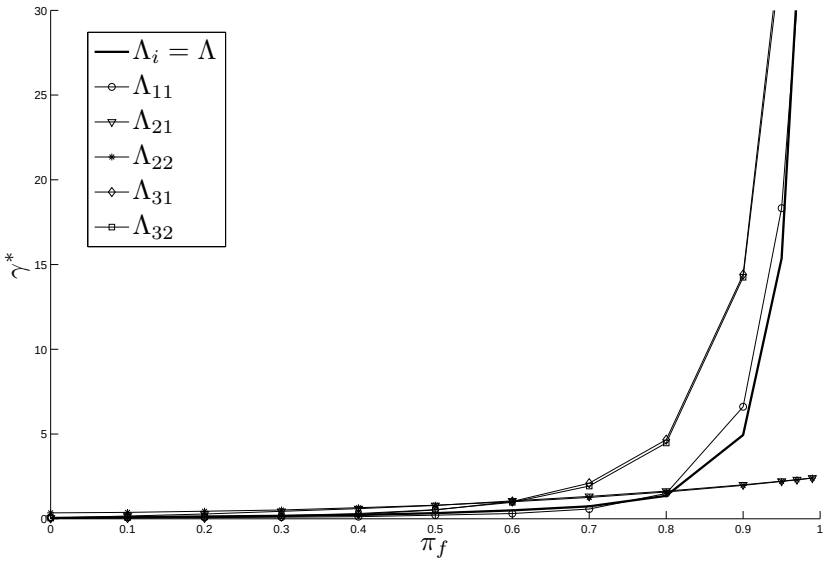


Figure 5.4: The $\mathscr{H}_\infty$ norm versus the probability of failure.

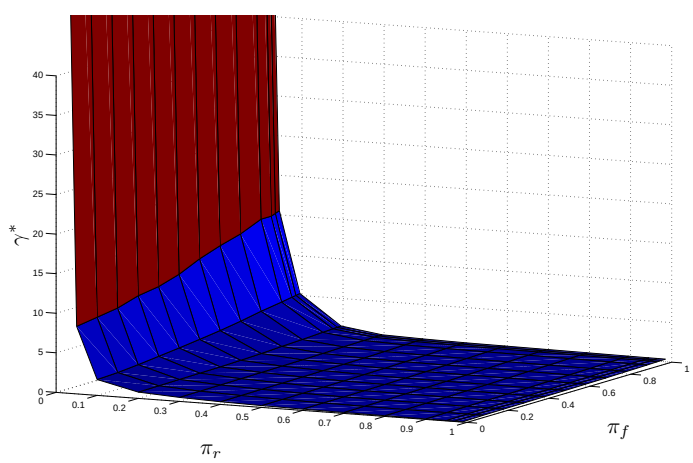


Figure 5.5: The $\mathscr{H}_\infty$ norm versus the probabilities of failure and recovery.

## 5.8 Conclusions and Future Work

The problem of decentralized estimation of interconnected DMJLSs while guaranteeing an $\mathscr{H}_\infty$ disturbance attenuation level with respect to all norm-bounded interactions were considered in this chapter. We provided necessary and sufficient rank-constrained LMI conditions for the synthesis of estimators, and we have extended the results to local mode-dependent estimators. The rank-constrained LMIs were solved via a complementarity linearization algorithm. The results were applied to the scheme of decentralized estimation over communication channels with Markovian packet-losses. Note that we can easily state results on guaranteed cost filtering similar to Chapters 3,4, however, it was omitted for the sake of space. Our results can be extended easily to accommodate norm-bounded uncertainties in the subsystems' matrices. Furthermore, the uncertainty structure can be made richer by considering sum-quadratic constraints instead of norm-bounded uncertainties where the corresponding stability notion used in this case is called Absolute stability (Moheimani et al., 1995).

# 6 Chapter

# Application to Dynamic Routing Problem With Switching Topology and Interconnected Time-Delays

## 6.1 Introduction

An important problem in the operation of communication and traffic networks is the routing of messages. Typically, a traffic network consists of many nodes which are connected through a number of links. The routing problem is to direct messages from one node to another, through such links, until they reach their desired destination. Since, in a typical situation, the amount of messages entering a network at various nodes may vary from time to time, a dynamic routing strategy, which can adopt to such variations, is required. Furthermore, it is often the case that the number of nodes in a network is large; in this case the vast number of different possible paths from one node to another, makes it virtually impossible to implement a centralized controller. Centralized controllers are also vulnerable to failures in the network and introduce a large communication overhead on the network. Thus, decentralized controllers, which can be implemented locally at individual nodes, and which require a minimum amount of information from the other nodes, are desirable to implement in practice. Some of the work in this area includes Segall (1977), Iftar et al. (1998), Baglietto et al. (2001).

Contrary to cellular networks, where the nodes are restricted to communicate with a few strategically placed base stations, in mobile ad hoc networks (MANETs) they can directly communicate with one another. However, due to the nature of the wireless channels each node can effectively communicate with only certain finite nodes, typically those that lie in its

vicinity or in its so-called neighboring set. In MANETs, the neighboring sets of nodes may change due to the mobility and variations in the network topology, left over energy resources, and increasing/decreasing the number of nodes. Therefore, the dynamics of the network characterizing the traffic flow will become time-varying. A recent work by Abdollahi et al. (2010) has modeled the switching behavior by a Markov chain, and developed $\mathscr{H}_\infty$ control scheme based on a continuous-time model originally developed by Segall (1977). However, since the original problem is discrete-time, we use a discrete-time model similar to Iftar et al. (1998), Baglietto et al. (2001). Also, our algorithm is different from the one used by Abdollahi et al. (2010) since they use a continuous model for the network which is not exact in practice, and hence the approach is completely different.

Our methodology will be based on the application of the $\mathscr{H}_\infty$ state-feedback algorithm developed in Chapter 3. The objective is based on minimization of the worst-case queuing length with respect to the (disturbing) input flow.

## 6.2 Network Modeling and Problem Formulation

### 6.2.1 Network Model

Consider a data network as a directed graph $(\mathscr{V}, \mathscr{E})$, consisting of a set $\mathscr{V}$ of $N$ vertices (nodes) and a set $\mathscr{E}$ of $L$ directed edges (links). Each node receives messages from both the in-neighbors nodes within the network and from outside the network. Each message has a destination node $d \in N$, and it is absorbed as soon as it arrives at that node. Messages arriving to a node other than their final destination are put into a queue and eventually are sent out to a out-neighbor node. It all the destination nodes are reachable from all other nodes in the network. Let $\mathscr{D}$ be the set of destination nodes, and let $D_i = |\mathscr{D}_i|$, where $\mathscr{D}_i = \mathscr{D} \backslash \{i\}$. In the worst case where all the nodes are source as well as destination in which messages are stored for all destinations. We assume that the nodes communicate with each other via a reliable protocol. Figure 6.1 shows an example of a network with 10 nodes.

The communication network dynamics can be expressed by the following queuing model that can be derived based on the fluid flow conservation principle (Baglietto et al., 2001), namely

$$q_i^d(k+1) = q_i^d(k) - \sum_{\nu \in \aleph_i} u_{i\nu}^d(k) + w_i^d(k) + \sum_{\ell \in \wp_i, \ell \neq d} u_{\ell i}^d(k - \lambda_{ki}(k)) \tag{6.1}$$

where

$q_i^d$: message queue length at node $i$ destined to node $d$,

$\aleph_i$: set of out-neighbors of node $i$,

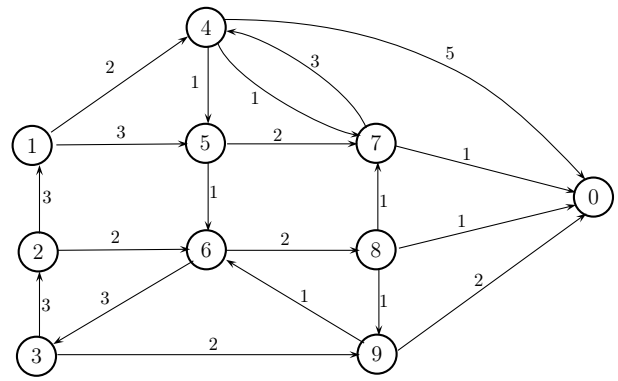


Figure 6.1: Example of a data network, adopted from Baglietto et al. (2001), with capacities shown for every link. Node 0 is the only destination node.

$\wp_i$: set of in-neighbors of node $i$,
$u^d_{\ell i}$: traffic flow routed from node $\ell$ to node $i$ destined to node $d$,
$w^d_i$: exogenous input flow entering node $i$ destined to node $d$,
$\lambda_{\ell i}(k)$ : total unknown time-varying and bounded delay in transmitting, propagating, and processing of messages (including identifying the destination, inserting in the queue and routing computation) routed from node $\ell$ to node $i$.

For each node $i \in \mathscr{V}$, we define:

$$\begin{aligned} x_i(k) &= \text{vec}[q^d_i], \text{ for all } d \in \mathscr{D}_i, \\ u_i(k) &= \text{vec}[u^d_{i\nu}], \text{ for all } d \in \mathscr{D}_i, \nu \in \aleph_i, \\ w_i(k) &= \text{vec}[w^d_i], \text{ for all } d \in \mathscr{D}_i. \end{aligned}$$

Thus, using this notation and (6.1) the queue lengths at each node can be written as:

$$x_i(k+1) = x_i(k) + B_i u_i(k) + w_i(k) + \sum_{\nu \in \wp_i} G_{i\nu} u_\nu(k - \lambda_{\nu i}(k)) \tag{6.2}$$

where each element of $B_i(G_{i\nu})$ is equal to -1(1) if its corresponding flow is outgoing (incoming) flow to node $i$ and is zero otherwise.

Until now the network topology was assumed to be static. Assume now that network is represented as $(\mathscr{V}, \mathscr{E}_{\sigma_k})$, where $\sigma_k \in \{1, .., M\}$ is a sequence of independent random variables that satisfy a Markov chain model with a known probability transition matrix. The network topologies $\mathscr{E}_1, .., \mathscr{E}_M$ are known a priori. Therefore (6.2) can be written in the following form:

$$\mathscr{S}_i : \; x_i(k+1) = x_i(k) + B_i(\sigma_k) u_i(k) + w_i(k) + \sum_{\nu \in \wp_i(\sigma_k)} G_{i\nu}(\sigma_k) u_\nu(k - \lambda_{\nu i}(k)) \tag{6.3}$$

### 6.2.2 Physical Constraints

Physical characteristics in a traffic network impose certain constraints that should be considered in the routing problem. A typical set of constraints can be given as for a certain node $i$ and all $\nu \in \aleph_i$

$$\begin{aligned} u_{i\nu}^d(k) &\geq 0 && \text{(Flow nonnegativity)} \\ 0 \leq q_i^d(k) &\leq \bar{q}_i^d && \text{(Queue length nonnegativity \& buffer size bound)} \\ \sum_{d \in \mathscr{D} \setminus \{i\}} u_{i\nu}^d(k) &\leq c_{i\nu}(\sigma_k) && \text{(Link capacity)} \end{aligned} \tag{6.4}$$

where $c_{i\nu}$ is the capacity of link from $i$ to $\nu$, and $q_i^d$ is the buffer size of the queue at node $i$ destined to node $d$.

### 6.2.3 Performance Objective

The performance objective is to minimize the worst-case weighted queueing length with respect to the input signal. Define the regulated variable:

$$z_i(k) = C_i(\sigma_k) x_i(k) \tag{6.5}$$

Given a disturbance attenuation level $\gamma$, our objective is guarantee a certain disturbance attenuation level for the large-scale system $\mathscr{S}$ composed of the subsystems $\mathscr{S}_i$. The following $\mathscr{H}_\infty$ norm inequality with $x(0) = 0$:

$$\sup_{\sigma_0} \sup_{0 \neq w \in \ell_2} \frac{\|z\|_2^2}{\|w\|_2^2} < \gamma^2$$

where $x(k) = [x_1^T(k) \ ... \ x_N^T(k)]^T$, and similarly for $z, w$.

The minimization of the worst-case weighted queueing length leads to minimization of the packet-loss percentage. Henceforth, the throughput is maximized.

## 6.3 Decentralized $\mathscr{H}_\infty$ Control for DMJLS With Interconnected Time-Delays

### 6.3.1 Problem Formulation

Note that the DMJLS (6.3),(6.5) is almost in the form of our formulation in §3.3 except for the time-delay. In this section, we derive a parallel theorem for the case of time-delays to apply it to the routing problem.

Consider a large-scale system $\mathscr{S}$ composed of $N$ interconnected discrete-time Markovian jump linear subsystems $\{\mathscr{S}_i\}_{i=1}^N$. The subsystem $\mathscr{S}_i$ is given as:

$$\begin{aligned} x_i(k+1) &= A_i(\sigma_k)x_i(k) + B_i(\sigma_k)u_i(k) + F_i(\sigma_k)w_i(k) \\ &\quad + \textstyle\sum_{\nu\in\wp_i(\sigma_k)} \left(\Gamma_{xi\nu}(\sigma_k)x_\nu(k-\lambda_\nu(k)) + \Gamma_{ui\nu}(\sigma_k)u_\nu(k-\lambda_\nu(k))\right) \qquad (6.6) \\ z_i(k) &= C_i(\sigma_k)x_i(k) + D_i(\sigma_k)u_i(k) \qquad (6.7) \end{aligned}$$

where the time-delay is assumed to be bounded as $0 \leq \lambda_\nu \leq \bar{\lambda}$ for some $\bar{\lambda} > 0$. The interaction matrices are factorized as:

$$[\Gamma_{xi\nu}(\sigma_k)\ \Gamma_{ui\nu}(\sigma_k)] = [E_i(\sigma_k)H_\nu(\sigma_k)\ E_i(\sigma_k)G_\nu(\sigma_k)] \qquad (6.8)$$

Define the interaction signal as

$$\eta_i(k) = \sum_{\nu\in\wp_i(\sigma_k)} H_\nu(\sigma_k)x_\nu(k-\lambda_\nu(k)) + G_\nu(\sigma_k)u_\nu(k-\lambda_\nu(k)) \qquad (6.9)$$

The Markov chain $\sigma_k \in \{1,..,M\}$ is a sequence of random variables with the following transition probabilities: $\pi_{ij} = \Pr[\sigma_{k+1} = i|\sigma_k = j]$. We consider a mode-dependent decentralized state-feedback of the form:

$$u_i(k) = K_i(\sigma_k)x_i(k) \qquad (6.10)$$

We assume that the pairs $(A_i(\sigma_k), B_i(\sigma_k)), i = 1,...,N$ are stochastically stabilizable Costa et al. (2005), Ji et al. (1991).

Consider the problem of decentralized quadratic stabilization with disturbance attenuation via state feedback control:

**Definition 6.1** The large-scale system $\mathscr{S}$ composed of subsystems $\{\mathscr{S}_i\}$ (6.6) is said to be quadratically stochastically stabilizable with disturbance attenuation level $\gamma > 0$ for all bounded delays via decentralized state feedback (6.10) if there exists $\{K_{ij}\}$ such that the

closed-loop large-scale system $\mathscr{S}_c$ is stochastically stable and $\|\mathscr{S}_{c,zw}\|_\infty < \gamma$ for all bounded delays.

### 6.3.2 Controller Synthesis

**Theorem 6.1** (a) The large-scale system $\mathscr{S}$ is quadratically stochastically stabilizable with disturbance attenuation level $\gamma > 0$ for all bounded delays via decentralized mode-dependent feedback (6.10) if there exist symmetric matrices $\{Q_{ij}\}$, $\{S_{ij\ell}\}$, matrices $\{Y_{ij}\}$, $\{R_{ij}\}$ and constants $\{\tau_i\}$, $i = 1, .., N$, $j, \ell = 1, ..., M$, satisfying the LMIs:

$$\left[\begin{array}{ccc|ccc} Q_{ij} & \bullet & \bullet & \bullet & \bullet & \bullet \\ 0 & \tau_i I & \bullet & \bullet & \bullet & \bullet \\ 0 & 0 & \gamma^2 I & \bullet & \bullet & \bullet \\ \hline A_{ij}Q_{ij} + B_{ij}Y_{ij} & \tau_i E_{ij} & F_{ij} & R_{ij} + R_{ij}^T - \bar{S}_{ij} & \bullet & \bullet \\ C_{ij}Q_{ij} + D_{ij}Y_{ij} & 0 & 0 & 0 & I & \bullet \\ \tilde{H}_{ij}Q_{ij} + \tilde{G}_{ij}Y_{ij} & 0 & 0 & 0 & 0 & \tilde{I}_i \end{array}\right] > 0 \tag{6.11}$$

$$\begin{bmatrix} S_{ij\ell} & R_{ij}^T \\ R_{ij} & Q_{i\ell} \end{bmatrix} > 0 \tag{6.12}$$

where $\bar{S}_{ij} = \sum_{\ell=1}^{M} \pi_{j\ell} S_{ij\ell}$. Furthermore, the corresponding mode-dependent control gain is given by:

$$K_{ij} = Y_{ij} Q_{ij}^{-1} \tag{6.13}$$

(b) The optimal attenuation level $\gamma^*$ can be found by solving the semi-definite program:

$$\text{min. } \gamma^2 \tag{6.14}$$

subject to (6.11), (6.12).

**Remark 6.1** Note the conditions in 6.1 are independent of $\bar{\lambda}$, and hence are valid for any bounded interconnected delays.

### 6.3.3 Proof of Theorem 6.1

Note that the statement matrix inequalities in Theorem 6.1 are identical to the matrix inequalities in the proof of Theorem 3.1. However, the proof is slightly different, and some ideas are used from the work of Moheimani et al. (1997a).

Using the same method as in the proof of Theorem 3.1 (refer to §3.3.3), the following matrix

inequality follows when $\sigma_k = j$:

$$\begin{bmatrix} x \\ \eta \\ w \end{bmatrix}^T \begin{bmatrix} \hat{A}_j^T \bar{P}_j \hat{A}_j - P_j + \hat{C}_j^T \hat{C}_j + \tilde{T}_2 \hat{H}_j^T \hat{H}_j & \bullet & \bullet \\ E_j^T \bar{P}_j \hat{A}_j & E_j^T \bar{P}_j E_j - \tilde{T}_1 I & \bullet \\ F_j^T \bar{P}_j \hat{A}_j & F_j^T \bar{P}_j E_j & F_j^T \bar{P}_j F_j - \gamma^2 I \end{bmatrix} \begin{bmatrix} x \\ \eta \\ w \end{bmatrix} < 0 \quad (6.15)$$

where $\hat{A}_{ij} = A_{ij} + B_{ij} K_{ij}$, $\hat{C}_{ij} = C_{ij} + D_{ij} K_{ij}$, and $\hat{H}_{ij} = H_{ij} + G_{ij} K_{ij}$, $\tilde{T}_1 = \text{diag}[\tau_1^{-1} I \ldots \tau_N^{-1} I]$, $\tilde{T}_2 = \text{diag}\left[\left(\sum_{\nu \neq 1} \tau_\nu^{-1}\right) I \ldots \left(\sum_{\nu \neq N} \tau_\nu^{-1}\right) I\right]$.

Multiplying the matrices in (6.15), we obtain:

$$\begin{aligned} & x^T(k)(\hat{A}_j^T \bar{P}_j A_j - P + \hat{C}_j^T \hat{C}_j + \tilde{T}_2 \hat{H}_j^T \hat{H}_j) x(k) + \eta^T(k)(E_j^T \bar{P}_j E_j - \tilde{T}_1 I)\eta(k) \\ & + w^T(k)(F_j^T \bar{P}_j F_j - \gamma^2 I) w(k) + 2w^T(k) F_j^T \bar{P}_j \hat{A}_j x(k) + 2\eta^T(k) E_j^T \bar{P}_j \hat{A}_j x(k) \\ & + 2w^T(k) F_j^T \bar{P}_j E_j \eta(k) < 0 \end{aligned} \quad (6.16)$$

Using (6.6), we can writing (6.16) as:

$$\begin{aligned} & (\hat{A}_j x(k) + E_j \eta(k) + F_j w(k))^T \bar{P}_j (\hat{A}_j x(k) + E_j \eta(k) + F_j w(k)) - x^T(k) P_j x(k) \\ & + \|z(k)\|^2 - \gamma^2 \|w(k)\|^2 + x^T(k) \tilde{T}_2 \hat{H}_j^T \hat{H}_j x(k) - \eta^T(k) \tilde{T}_1 \eta(k) < 0 \end{aligned} \quad (6.17)$$

The last two terms can be written as:

$$\begin{aligned} & x^T(k) \tilde{T}_2 \hat{H}_j^T \hat{H}_j x(k) - \eta^T(k) \tilde{T}_1 \eta(k) \\ & = \sum_{i=1}^{N} \left( \sum_{\nu \in \wp_{ij}} \tau_\nu^{-1} \right) x_i^T(k) \hat{H}_{ij}^T \hat{H}_{ij} x_i(k) - \tau_i^{-1} \|\eta_i(k)\|^2 \\ & = \sum_{i=1}^{N} \tau_i^{-1} \left( \left( \sum_{\nu \in \wp_{ij}} x_\nu^T(k) \hat{H}_{\nu j}^T \hat{H}_{\nu j} x_\nu(k) \right) - \|\eta_i(k)\|^2 \right) \\ & \geq \sum_{i=1}^{N} \tau_i^{-1} \sum_{\nu \in \wp_{ij}} x_\nu^T(k) \hat{H}_{\nu j}^T \hat{H}_{\nu j} x_\nu(k) - x_\nu^T(k - \lambda_\nu(k)) \hat{H}_{\nu j}^T \hat{H}_{\nu j} x_\nu(k - \lambda_\nu(k)) \end{aligned} \quad (6.18)$$

where the last inequality holds using (6.9) and the triangle inequality.

Define the following Laypunov-Krasovskii functional (Boyd et al., 1994, see §10.4) when $\sigma_k = j$:

$$V(x(k), \sigma_k) = x^T(k) P_j x(k) + \sum_{i=1}^{N} \tau_i^{-1} \sum_{\nu \in \wp_{ij}} \sum_{\ell=1}^{\lambda_\nu(k)} x_\nu^T(k - \ell) \hat{H}_{\nu j}^T \hat{H}_{\nu j} x_\nu(k - \ell) \quad (6.19)$$

Using (6.18),(6.19), we can write (6.17) as:

$$\max_{w\in\ell_2}\left\{\mathbb{E}[V(x(k+1),\sigma_{k+1})|x(k),\sigma_k=j]-V(x(k),\sigma_k)+\|z(k)\|^2-\gamma^2\|w(k)\|^2\right\}<0 \quad (6.20)$$

Using a stochastic version of Bellman' principle of optimality (Kushner, 1967), the value function is $V(x(k),\sigma_k)$, and therefore

$$J(w)=\mathbb{E}\sum_{k=0}^{\infty}\|z(k)\|^2-\gamma^2\|w(k)\|^2<0,\ \text{for all } w\in\ell_2\ \&\ x(0)=0$$

which implies that the closed-loop system is quadratically stochastically stable and has $\mathscr{H}_\infty$ norm less than $\gamma$. ■

## 6.4 Decentralized $\mathscr{H}_\infty$ Controller Applied to Dynamic Routing

### 6.4.1 Incorporating Physical Constraints

Note that method presented in the previous section can be applied to routing problem in §6.2 directly provided that the physical constraints (6.4) are satisfied. We provide here LMI conditions for incorporating the physical constraints with a similar approach to the one suggested by Abdollahi et al. (2010).

#### Nonnegativity Constraints

The nonnegativity constraints imply that the system shall be a positive systems, i.e. all its trajectories take place in the positive orthant. The following lemma gives the conditions for the positivity of discrete-time delay system:

**Lemma 6.1** (Wu et al., 2009) The linear discrete-time delayed system $x(k+1)=Ax(k)+Ex(t-\tau(t))$ with $x(0)=0$ is nonnegative if and only if $A,E$ are nonnegative element-wise. Furthermore, the nonnegative system is asymptotically stable if and only there exist positive *diagonal* matrices $P_1,P_2$ that satisfies the LMI:

$$\begin{bmatrix} A^TP_1A+P_2-P_1 & A^TP_1E \\ \bullet & E^TP_1E-P_2 \end{bmatrix}<0$$

Therefore, to guarantee the positivity of the trajectories we need guarantee the elementwise nonnegativity of $I + B_{ij}Y_{ij}Q_{ij}^{-1}$ and $G_{\nu j}Y_{\nu j}Q_{\nu j}^{-1}$ for $\nu \in \wp_{ij}, i = 1, .., n, j = 1, .., M$. Furthermore, Lemma 6.1 suggests that we will not lose anything by restricting $Q_{ij}$ to be diagonal. This is also justified by the fact that the dynamics of states at every subsystem are decoupled from each other.

From the former discussion, we formulate the following LMIs to satisfy the nonnegativity constraints:

$$\begin{aligned} &Q_{ij} \text{ are restricted to be diagonal} \\ &Q_{ij} + B_{ij}Y_{ij} \succeq 0 \\ &G_{\nu j}Y_{\nu j} \succeq 0 \\ &Y_{ij} \succeq 0 \end{aligned} \tag{6.21}$$

for $\nu \in \wp_{ij}, i = 1, .., n, j = 1, .., M$. The notation $Y \succeq 0$ means that $Y$ is nonnegative elementwise.

### Capacity Constraints

The capacity constraint in (6.4) can be written for a certain node $i$ and all $\nu \in \aleph_i$ as

$$W_\nu(\sigma_k)u_i(k) \leq c_\nu(\sigma_k) \tag{6.22}$$

Define the following ellipsoid:

$$\Omega_i = \{x_i(k) | x_i^T(k)Q_i^{-1}(\sigma_k)x_i(k) \leq \rho_i(\sigma_k)\} \tag{6.23}$$

where $\rho_{ij}$ is a constant to be chosen later, and $Q_{ij}$ result from applying Theorem 6.1.

From the definition of $V(x(k), \sigma_k)$ in (6.19) we have $x_i^T(k)Q_i^{-1}(\sigma_k)x_i(k) \leq V(x(k), \sigma_k)$. On the other hand, by summing the sides of inequality (6.20) from 0 to $\infty$ with $x(0) = 0$, we get:

$$\mathbb{E}V(x(k), \sigma_k) \leq -\|z\|_2^2 + \gamma^2\|w\|_2^2 \leq \gamma^2 L$$

where a bound on the energy of input disturbance $\|w_i\|_2^2 \leq L$ is assumed to be known. Therefore, we conclude that if $x(k) \in \Omega_i$ then $\gamma^2 L \leq \rho_{ij}$.

Substituting for the control signal for its value $u_i = Y_{ij}Q_{ij}^T x_i$, and squaring the capacity bound (6.22) we get

$$x_i^T(k)(W_{\nu j}Y_{ij}Q_{ij}^T)^T W_{\nu j}Y_{ij}Q_{ij}^T x_i(k) \leq c_{\nu j}^2 \tag{6.24}$$

Furthermore, using (6.23) we can guarantee the previous inequality be requiring:

$$W_{\nu j} Y_{ij} Q_{ij}^T)^T (\rho_{ij}/c_{i\nu}^2)(W_{\nu j} Y_{ij} Q_{ij}^T) \leq Q_{ij}^{-1} \tag{6.25}$$

If we apply the Schur's complement to (6.25) we get the LMI conditions that expresses the capacity constraints:

$$L\gamma^2 \leq \max_{i,j} \rho_{ij} \tag{6.26}$$

$$\begin{bmatrix} Q_{ij} & \bullet \\ W_{\nu j} Y_{ij} & c_{i\nu}^2/\rho_{ij} \end{bmatrix} \geq 0 \tag{6.27}$$

**Buffer Size Constraints**

The constraint on the queue length for each node can be expressed as:

$$U_{id} x_i \leq \bar{q}_i^d, \quad d = 1, .., D_i, i = 1, .., N \tag{6.28}$$

Using the same procedure used for capacity constraints, we get the required LMI:

$$\begin{bmatrix} Q_{ij} & \bullet \\ U_{\nu j} Y_{ij} & (\bar{q}_i^d)^2/\rho_{ij} \end{bmatrix} \geq 0 \tag{6.29}$$

### 6.4.2 Application of the decentralized controller to dynamic routing

Since we have represented the physical constraints as LMIs, we propose the following algorithm to design the decentralized controller gains:

1. Solve the SDPs in Theorem 3.1 to system (6.3) without the physical constraints. Set $\gamma^* = \gamma$.

2. Set $\rho_{ij} = \gamma^* L$, where $L$ is an upper bound on the energy of the exogenous input flow. The a priori knowledge of $L$ is usually available to network performance engineers.

3. Solve the SDP of Theorem 3.1 with the extra LMI constraints (6.21),(6.26),(6.29).

4. If the SDP in the previous step was infeasible, set $\gamma^* := \alpha\gamma^*$ and go to step 2, for some $\alpha > 1$. If the SDP in the previous step was solvable, or a maximum number of iteration is reached, quit.

Note that there is no analytical way of choosing $L, \gamma, \rho_{ij}, \alpha$, however, they can be chosen based on experience, or trail and error.

## 6.5 Simulation Example

We apply the algorithm proposed in the previous section to a dynamic routing problem with nine nodes and one destination node in a traffic network switching between four topologies. The "a" topology was adopted from Baglietto et al. (2001). The capacities are shown on Figure 6.2, and maximum buffer size is 150 kb for all nodes.

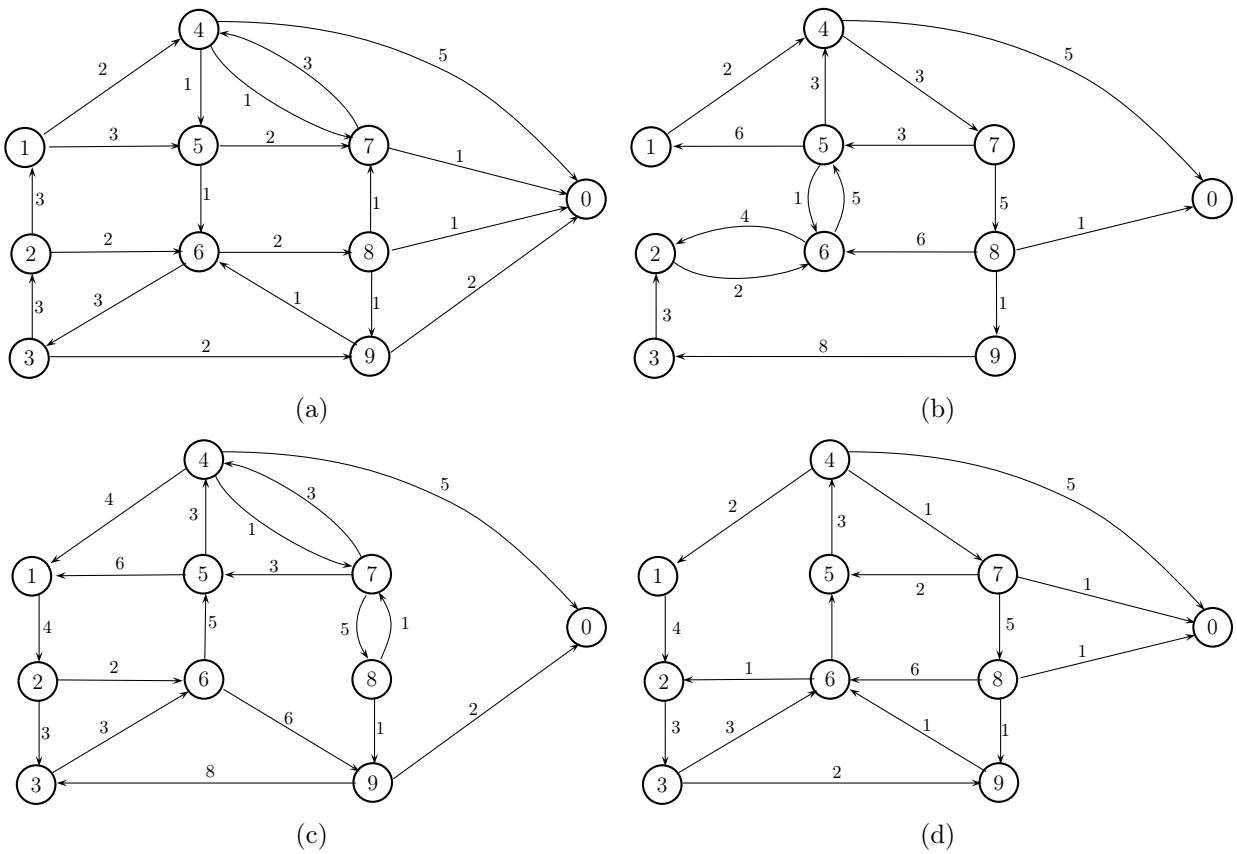


Figure 6.2: The four topologies of the data network considered. Note that node "0" is the destination node. The "a" topology was adopted from Baglietto et al. (2001).

The probability transition matrix is given as[1]:

$$\Lambda = \begin{bmatrix} 0.8500 & 0.05000 & 0.05000 & 0.05000 \\ 0.07000 & 0.8300 & 0.05000 & 0.05000 \\ 0.04000 & 0.03000 & 0.8600 & 0.07000 \\ 0.08000 & 0.01000 & 0.01000 & 0.9000 \end{bmatrix}$$

The algorithm in §6.4.2 was applied successfully to design controller gains with $\gamma = 28.284..$,

[1]The matrix was constructed to have the property that the probability of returning to same mode is significantly higher than transition probability, which is reasonable in practice.

which are given by:

$$K_{11} = \begin{bmatrix} 0 \\ 0.08076 \\ 0.08081 \end{bmatrix}, K_{12} = \begin{bmatrix} 0 \\ 0.1109 \\ 0 \end{bmatrix}, K_{13} = \begin{bmatrix} 0.1111 \\ 0 \\ 0 \end{bmatrix}, K_{14} = \begin{bmatrix} 0.1003 \\ 0 \\ 0 \end{bmatrix}, K_{21} = \begin{bmatrix} 0.07157 \\ 0 \\ 0.07155 \end{bmatrix}, K_{22} = \begin{bmatrix} 0 \\ 0 \\ 0.09724 \end{bmatrix},$$

$$K_{23} = \begin{bmatrix} 0 \\ 0.07445 \\ 0.07445 \end{bmatrix}, K_{24} = \begin{bmatrix} 0 \\ 0.09374 \\ 0 \end{bmatrix}, K_{31} = \begin{bmatrix} 0.05489 \\ 0 \\ 0.05488 \end{bmatrix}, K_{32} = \begin{bmatrix} 0.07092 \\ 0 \\ 0 \end{bmatrix}, K_{33} = \begin{bmatrix} 0 \\ 0.06667 \\ 0 \end{bmatrix}, K_{34} = \begin{bmatrix} 0 \\ 0.02796 \\ 0.1137 \end{bmatrix},$$

$$K_{41} = \begin{bmatrix} 0 \\ 0.02605 \\ 0.02605 \\ 0.1104 \end{bmatrix}, K_{42} = \begin{bmatrix} 0 \\ 0.0 \\ 0.02977 \\ 0.1168 \end{bmatrix}, K_{43} = \begin{bmatrix} 0.02673 \\ 0.0 \\ 0.02669 \\ 0.1110 \end{bmatrix}, K_{44} = \begin{bmatrix} 0.02520 \\ 0.0 \\ 0.02517 \\ 0.1088 \end{bmatrix}, K_{51} = \begin{bmatrix} 0 \\ 0 \\ 0.07377 \\ 0.07377 \end{bmatrix}, K_{52} = \begin{bmatrix} 0.06579 \\ 0.06555 \\ 0.06547 \\ 0 \end{bmatrix},$$

$$K_{53} = \begin{bmatrix} 0.07939 \\ 0.07920 \\ 0 \\ 0 \end{bmatrix}, K_{54} = \begin{bmatrix} 0 \\ 0.1084 \\ 0 \\ 0 \end{bmatrix}, K_{61} = \begin{bmatrix} 0 \\ 0.07071 \\ 0 \\ 0.07071 \\ 0 \end{bmatrix}, K_{62} = \begin{bmatrix} 0.07295 \\ 0 \\ 0.07297 \\ 0 \\ 0 \end{bmatrix}, K_{63} = \begin{bmatrix} 0 \\ 0 \\ 0.07149 \\ 0.0 \\ 0.07151 \end{bmatrix}, K_{64} = \begin{bmatrix} 0.06828 \\ 0 \\ 0.06828 \\ 0 \\ 0 \end{bmatrix},$$

$$K_{71} = \begin{bmatrix} 0.04082 \\ 0 \\ 0.0 \\ 0.1110 \end{bmatrix}, K_{72} = \begin{bmatrix} 0 \\ 0.07297 \\ 0.07307 \\ 0.0 \end{bmatrix}, K_{73} = \begin{bmatrix} 0.05586 \\ 0.05586 \\ 0.05596 \\ 0 \end{bmatrix}, K_{74} = \begin{bmatrix} 0 \\ 0.03395 \\ 0 \\ 0.1016 \end{bmatrix}, K_{81} = \begin{bmatrix} 0 \\ 0.02889 \\ 0.02889 \\ 0.1034 \end{bmatrix}, K_{82} = \begin{bmatrix} 0.03044 \\ 0 \\ 0.03021 \\ 0.1046 \end{bmatrix},$$

$$K_{83} = \begin{bmatrix} 0 \\ 0.05926 \\ 0.05926 \\ 0 \end{bmatrix}, K_{84} = \begin{bmatrix} 0.02598 \\ 0.0 \\ 0.02580 \\ 0.09738 \end{bmatrix}, K_{91} = \begin{bmatrix} 0 \\ 0.03947 \\ 0.1123 \end{bmatrix}, K_{92} = \begin{bmatrix} 0.07954 \\ 0 \\ 0 \end{bmatrix}, K_{93} = \begin{bmatrix} 0.04267 \\ 0 \\ 0.1143 \end{bmatrix}, K_{94} = \begin{bmatrix} 0 \\ 0.08071 \\ 0 \end{bmatrix},$$

The disturbance input is assumed to be given in kbps as:

$$w_i(k) = \begin{cases} \frac{\sqrt{6}}{\sqrt{125L}}\omega_k & : \quad 0 < k \leq 125, \\ 0 & : \quad \text{Otherwise.} \end{cases}$$

where $\omega_k$ is a sequence of i.i.d random variables with Poisson probability density function with mean 2 kbps. The scaling constant was chosen so that $\|w_i\|_2^2 = L$. Note the structure of the disturbance signal is for conventional reasons only, since the design procedure cares about $L$ only.

Table 6.1 shows a comparison between packet-loss percentages for different exogenous input energy level between deterministic and Markovian controllers designed with $L = 300, \gamma = 28.284...$ The deterministic controller was designed assuming that "a" is the only possible topology, and the numbers in the table were averaged over 200 iterations. It is clear from the table that the proposed algorithm achieves very good throughput.

For $L = 300$, Figures 6.3, 6.4, 6.5, 6.6 depicts the queue lengths, control signal, exogenous signals, and the Markovian switching signal for the application of control gain above to the considered network. Note that the queue lengths converges quickly to zeros as soon as the input flows stops.

Table 6.1: Comparison between the packet-loss percentages for different exogenous input energy level between deterministic and Markovian controllers designed with a constant $L = 300, \gamma = 28.284...$

| $L$ | Packet-Loss% (Deterministic) | Packet-Loss% (Markovian) |
|---|---|---|
| 150 | 6.08 % | 0% |
| 200 | 7.10 % | 0.0096 % |
| 250 | 10.22 % | 0.037 % |
| 300 | 11.32 % | 0.18 % |
| 350 | 14.09 % | 0.48 % |
| 400 | 16.53 % | 0.83 % |
| 450 | 19.26 % | 1.01 % |

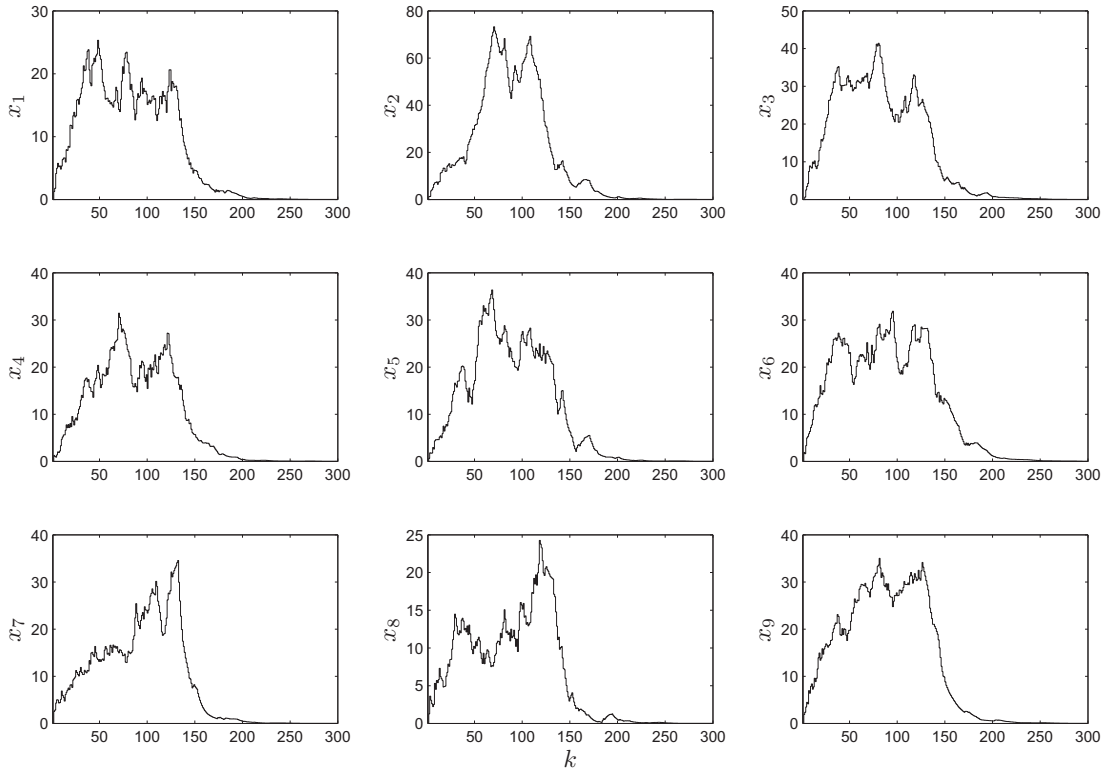


Figure 6.3: Queue length at every node versus multiples of time units.

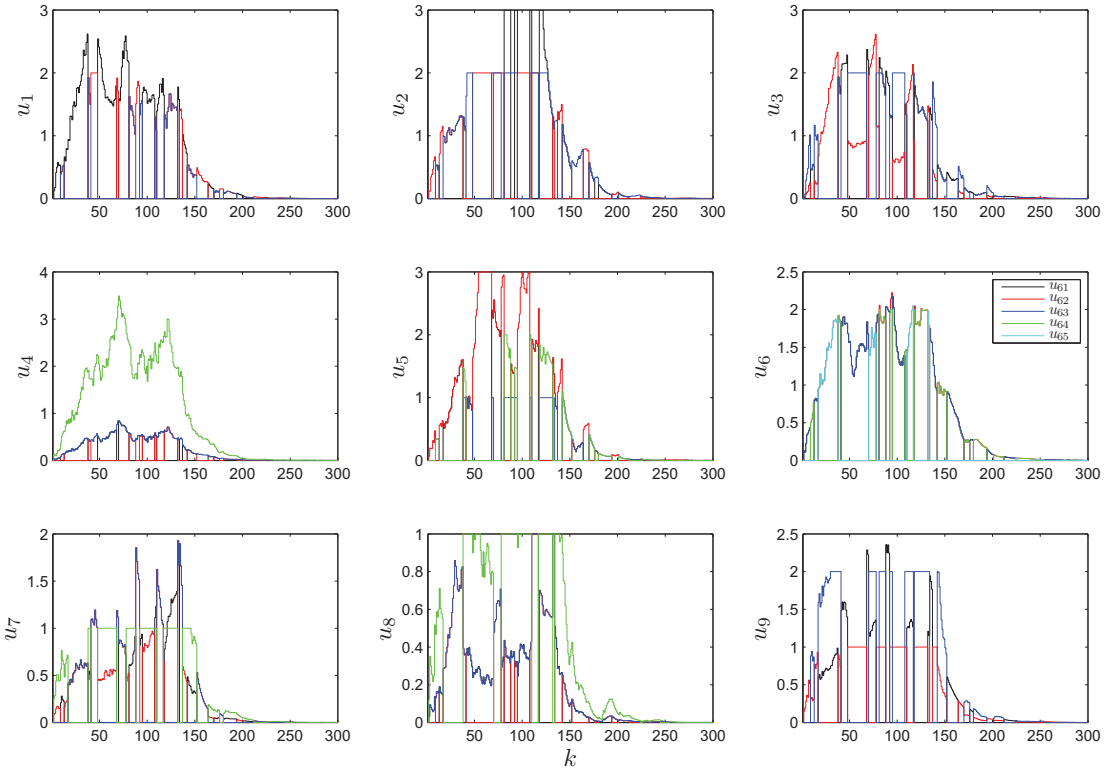


Figure 6.4: The control inputs generated by every node.

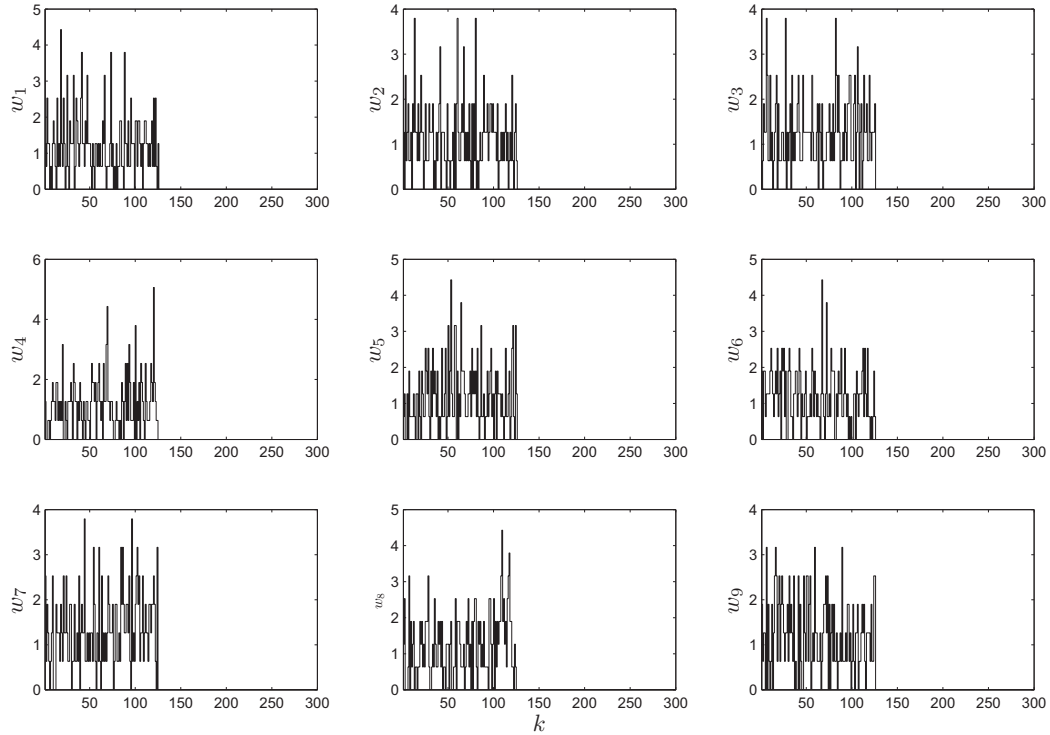


Figure 6.5: The exogenous inputs to the nodes which are a sequence of independent Poisson distributed random variables.

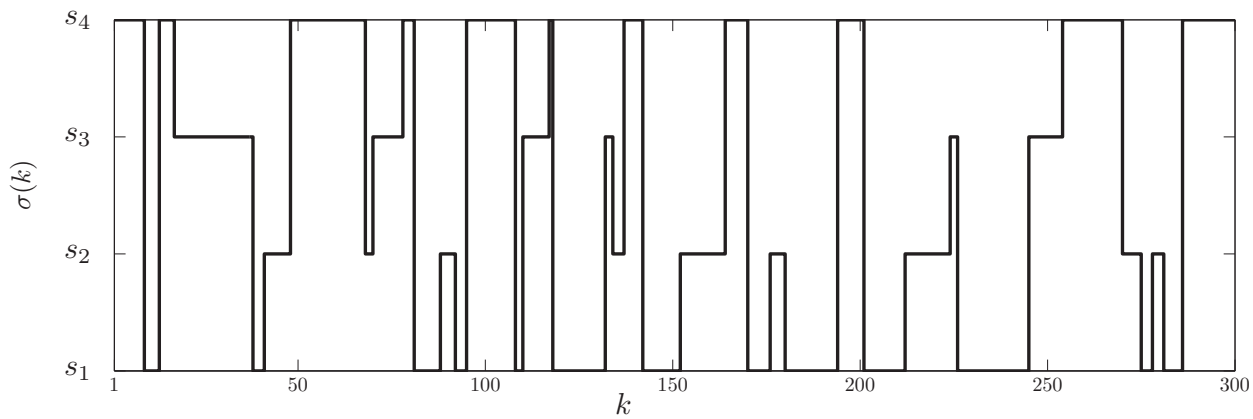


Figure 6.6: The Markovian switching signal associated with the example.

## 6.6 Conclusions and Future Work

In this chapter,we have considered the problem of dynamic routing in traffic network with a switching topology and interconnected bounded delays. We proposed a routing algorithm based on a decentralized state feedback $\mathscr{H}_\infty$ controller that minimizes the maximum queue length with respect to the worst case exogenous input flow. The results were illustrated via example.

For future work, the algorithm proposed in §6.4.2 assumes that all possible configurations are known beforehand, and the probability transition matrix is known. If the later assumption was not valid, one can still formulate the problem with transition matrix with polytopic uncertainties (Boukas, 2009), for example. The other restriction is the global mode of the network is needed to be broadcast for all the nodes. An alternative is develop local-mode dependent results similar to those in Chapter 3.

Furthermore, it is well-known that networks have two conflicting requirements: the throughput and the delay. Our algorithm handles the problem of throughput efficiently, however, effects on delay need to be investigated further.

# 7 Chapter

# Stability Analysis of Distributed Overlapping Estimation Scheme with Markovian Packet Dropouts

## 7.1 Introduction

Centralized estimation, although possibly optimal, is neither robust nor scalable to complex large-scale dynamical systems with their measurements distributed on a large geographical region. There are several reasons for this, first, the computational complexity of employing such centralized estimator is very high. Second, the distribution of the sensors over vast geographical region poses a large communication burden which may add long delays and loss of data to the estimation process. Third, the centralized mechanism is harder to adapt to the changes in the large-scale system. Fourth, the large-scale system can be composed of smaller subsystems with poorly modeled interactions between them and centralized estimation will not account for this effectively.

Decentralized estimation offers a good alternative which removes the difficulties caused by centralization. In this approach, the large-scale system is decomposed into $N$ subsystems, which are possibly overlapping. This decomposition can be constructed based on the geographical distribution, constraints on the measurements availability, weak coupling between the subsystems, etc... After the system decomposition, a local low-order estimator is built for each subsystem so that it operates on local measurements. However, each local estimator estimates a subset of the states only or it may estimate poorly some of the faraway systems' states. As a result, a fusion mechanism is needed to construct the estimate of the whole system states' vector. This classifies the problem of decentralized estimation into distributed

vs. hierarchical estimation. This distinction depends on whether the global estimate is required to be computed at a specific location or at several locations. Another classification is according to the communication between agents which can be all-to-all or multi-hop communication between the agents. All-to-all means that every estimation agent can communicate with every other estimation agent directly, while multi-hop communication is when some agents need to route messages through intermediate nodes.

In the other hand, the recent technological advances in wireless communication and the decreasing in cost and size of electronics have promoted the appearance of large inexpensive interconnected systems, each with computational and sensing capabilities. Therefore, the systems are distributed with components communicating over networks. However, using communication networks is not free of charge since communication networks has its problems which may effect the estimation process considerably by destabilizing the estimator or deteriorating the estimation quality. These problems include time delay, packet dropout, fading, etc... We are interested specifically by packet dropouts. It can result from dropping by the routers due to congestion, dropping by the receiver due to long delay or dropping by the transmitter due to the inability to access the network. In the case of decentralized estimation, packets dropouts can affect either the communication between the system and the estimation agents or the communication between the agents themselves.

The problem of decentralized estimation is a rich and old problem in the literature (Šiljak, 1991). The work in the literature can be classified based on i) the overlapping model used, ii) distributed vs. hierarchical estimation, iii) All-to-all vs. multi-hop communication, iv) the fusion of local estimates method. In this work, we consider distributed all-to-all estimation with fusion achieved via a consensus strategy. Recent work on decentralized and distributed estimation includes (Spanos et al., 2005, Xiao et al., 2005, Olfati-Saber, 2005, Carli et al., 2008, Khan et al., 2008, Stanković et al., 2009, Fagnani et al., 2009, Cattivelli et al., 2010, Ugrinovskii, 2010).

The area of networked systems has been very active recently (Antsaklis et al., 2007). In this work we consider only the problem of packet dropouts. Packet dropouts can be seen as a switch that controls the transmission of measurements. The switching law can modeled as an independent identically distributed (iid) Bernoulli process. Basic results for centralized Kalman filtering were provided in Sinopoli et al. (2004). A more general and realistic model is the two-state Markov chain model, the problem of Kalman filtering was considered in Huang et al. (2007).

The problem of consensus-based decentralized estimation with Bernoulli packet dropouts was discussed in Stanković et al. (2009) and sufficient conditions were provided for mean stability and error covariance boundedness.

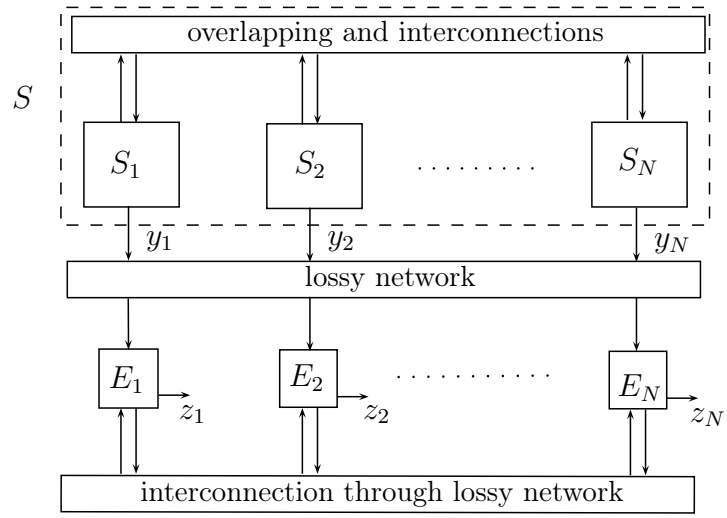


Figure 7.1: Block diagram of the distributed filtering problem.

In this work, we study the stability of the algorithm presented in Stanković et al. (2009) from the perspective of Markovian jump linear systems. We derive a necessary and sufficient condition of the mean-square stability of the error in the form of linear matrix inequalities. This condition simplifies in the case Bernoulli erasure channels. Furthermore, similar to the conditions in Stanković et al. (2009), we provide sufficient conditions for the mean stability and error covariance boundedness for Markovian packet dropouts and arbitrary packet dropouts.

## 7.2 The Decentralized Overlapping Estimator

### 7.2.1 Problem Formulation, and the Estimation Algorithm

Suppose that we have a linear time-invariant discrete-time system $S$ which can be realized as:

$$S: \begin{cases} x_{k+1} &= Ax_k + w_k \\ y_k &= Cx_k + v_k \end{cases} \tag{7.1}$$

where $x_k \in \mathbb{R}^n, y_k \in \mathbb{R}^m, w_k \in \mathbb{R}^n$ and $v_k \in \mathbb{R}^m$ are the system's states, measurements, state noise and measurement noise, respectively. It is assumed that $w_k \sim \mathcal{N}(0, Q)$, $v_k \sim \mathcal{N}(0, R)$ and that $w_k, v_k$ are mutually independent stochastic processes.

We shall consider the problem of decentralized estimation in which $N$ estimation agents have the goal to generate their estimates $\{z^i\}_{i=1}^N$ of the state $x$ of the system $S$ based on local measurements, a priori knowledge they possess about the system and real-time communication between the agents. Figure 7.1 shows a block diagram for the system. Assume

that the $i^{\text{th}}$ agent has a possibility to observe $y_k^i \in \mathbb{R}^{m_i}$, composed of the components of $y_k$ with indices specified by the index set $\mathcal{Y}_i$. The subsystem known by the $i^{\text{th}}$ agent will be:

$$S_i : \left\{ \begin{array}{rcl} x_{k+1}^i & = & A^i x_k^i + w_k^i \\ y_k^i & = & C^i x_k^i + v_k^i \end{array} \right. \tag{7.2}$$

where $x_k^i \in \mathbb{R}^{m_i}$ is vector composed of the components of $x_k$ selected by the state index set $\mathcal{X}_i$. Accordingly, $A^i \in \mathbb{R}^{n_i \times n_i}$ is a matrix that contains the elements of $A$ selected by the pairs of indices specified by $\mathcal{X}_i \times \mathcal{X}_i$, and similarly for $C^i, w^i, v^i$. Note that $\{S_i\}_{i=1}^N$ represents an *overlapping decomposition* of the system $S$.

Based on the system $S_i$, the $i^{\text{th}}$ agent can build its estimate $\hat{x}_k^i$ of $x_k^i$. For simplicity, we assume that the local filter is the classical steady-state Kalman filter (Anderson et al., 1979) with gain $G^i = Y^i(C^i)^T(C^iY^i(C^i)^T + R^i)^{-1}$, where $Y^i$ is stabilizing solution of the discrete-time algebraic Riccati equation $Y^i = A^i(Y^i - G^iC^iY^i)(A^i)^T + Q^i$. Even though we used a Kalman filter in the simulations, our analysis is *completely independent* of the local estimation laws used.

Because of the network, the agent will not receive $y_k^i$, instead it will receive a distorted version $\hat{y}_k^i$ due to packet dropouts. Therefore, the local estimator equations are:

$$\begin{array}{rcl} \hat{x}_{k|k}^i & = & \hat{x}_{k|k-1}^i + \theta_k^i G^i(y_k^i - C^i\hat{x}_{k|k-1}^i) \\ \hat{x}_{k+1|k}^i & = & A\hat{x}_{k|k}^i \end{array} \tag{7.3}$$

where $\theta_k^i \in \{0, 1\}$ is a two-state Markov chain with 0-state representing packet loss and 1-state representing packet arrival. This model of channel is called the Gilbert-Elliot model (Gilbert, 1960).

At each time step, denote the probability distribution by $\pi_k^i = \begin{bmatrix} \Pr(\theta_k^i = 0) & \Pr(\theta_k^i = 1) \end{bmatrix}$, then it will evolve in time as:

$$\pi_{k+1}^i = \pi_k^i \begin{bmatrix} 1 - q_i & q_i \\ p_i & 1 - p_i \end{bmatrix} = \pi_k^i \Lambda_i \tag{7.4}$$

where $p_i = \Pr(\theta_k^i = 0 | \theta_{k-1}^i = 1), q_i = \Pr(\theta_k^i = 1 | \theta_{k-1}^i = 0)$ are called the failure rate and the recovery rate, respectively and $\Lambda_i$ is the transition matrix. We assume without loss of generality that the initial state of the Markov chain is $\theta_\circ^i = 1$. Figure 7.2 depicts the digraph representation of the Markov chain.

Note that the Bernoulli erasure model can be recovered from the above model by setting $p_i = 1 - q_i$.

The decentralized estimators defined in (7.3) provide overlapping estimates of $x_k$. Our

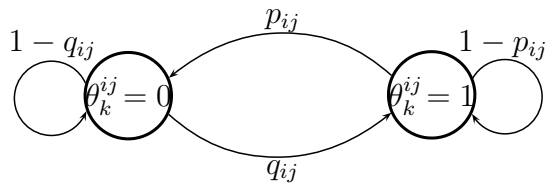


Figure 7.2: Digraph representation of the Gilbert-Elliot channel model of the link $ij$.

objective is to fuse these estimates at each agent so that it can build its estimate $z_k^i$ of $x_k$. We assume that each agent can communicate its estimate to the other agents through lossy links, therefore we will represent the estimation equation as:

$$E_i : \left\{ \begin{array}{rcl} z_{k|k}^i & = & z_{k|k-1}^i + \theta_k^i G_i(y_k^i - C_i z_{k|k-1}^i) \\ z_{k+1|k}^i & = & K_{ii} A_i z_{k|k}^i + \sum_{i \neq j} \theta_k^{ij} K_{ij} A_j z_{k|k}^j \end{array} \right. \tag{7.5}$$

where $K_{ij} \in \mathbb{R}^{n \times n}$ is a diagonal consensus gain matrix, $A_i \in \mathbb{R}^{n \times n}$ is a matrix whose entries specified by the indices $\mathcal{X}_i \times \mathcal{X}_i$ are equal to those of $A^i$, while the remaining entries are zeros. $G_i, C_i$ are defined analogously. $\theta_{ij}$ is a two-state Markov chain with probabilities $p_{ij}, q_{ij}$ and transition matrix $\Lambda_{ij}$ defined as in (7.4).
Notice that (7.5) is basically (7.3) with consensus terms added.

### 7.2.2 The Estimation Error Dynamics

Our ultimate goal is to provide stability conditions for the decentralized estimator, therefore we will represent the whole system as a single discrete-time system.
As a result of decentralization, we have $N$ lossy links between the system and the estimators and $N(N-1)$ links between the estimators totaling to $N^2$ links. This means that we have $N^2$ Markov chains which we assume them independent. Therefore, we can define a $2^{N^2}$-states Markov chain with the combined state $\theta_k \in \{0, 1, ..., 2^{N^2}\}$. We adopt that $\theta_k = i$ if $i$ has the binary representation $\left(\theta_k^{11} \dots \theta_k^{1N} \dots \theta_k^{NN}\right)$, where for simplicity of notation we denote $\theta_k^{ii} = \theta_k^i$.
It is clear that the transition matrix for the augmented state can be computed as:

$$\Lambda = \bigotimes_{i=1}^{N} \bigotimes_{j=1}^{N} \Lambda_{ij}$$

where $\otimes$ denotes the Kronecker product and $P$ is of size $M \times M, M = 2^{N^2}$. We denote $\pi_k^{(i)} = \Pr(\theta_k = i)$, so we have $\pi_k = [\pi_k^{(1)} ... \pi_k^{(M)}]$ and $\pi_{k+1} = \pi_k \Lambda$. .

Define the $nN \times nN$ *consensus matrix* $P_{\theta_k}$ with diagonal blocks $[K_{ii}]$ and off-diagonal

blocks $[\theta_k^{ij} K_{ij}]_{i \neq j}$. Define also $\Gamma_{\theta_k} = \text{diag}[\Gamma_{\theta_k}^1 \dots \Gamma_{\theta_k}^N]$, $\Gamma_{\theta_k}^i = A_i - \theta_k^i G_i C_i$. Notice that we used the notation $P_{\theta_k}, \Gamma_{\theta_k}$ instead of $P_k, \Gamma_k$ to emphasize that they are completely determined by the combined Markov state $\theta_k$.

Also, let us introduce the following notation: $\hat{A} = \text{diag}[A_1 \dots A_N]$, $\Theta_k = \text{diag}[\theta_k^1 \dots \theta_k^N]$, $G = \text{diag}[G_1 \dots G_N]$ and $\hat{C} = \text{diag}[C_1 \dots C_N]$.

Let $Z_{k|k} = [{z_{k|k}^1}^T \dots {z_{k|k}^N}^T]^T$ be the vector of estimates and $Y_k = [{y_k^1}^T \dots {y_k^N}^T]^T$ be the vector of overlapping measurements. Therefore, a compact representation of the algorithm can be written as:

$$\begin{aligned} Z_{k|k} &= Z_{k|k-1} + \Theta_k G(Y_k - \hat{C} Z_k) \\ Z_{k+1|k} &= P_{\theta_k} \hat{A} Z_{k|k} \end{aligned} \tag{7.6}$$

Let the estimation error $e_k = Z_{k|k-1} - X_k$, where $X_k = [x_k^T \dots x_k^T]^T$. We can write the error dynamics as:

$$e_{k+1} = \Psi_{\theta_k} e_k + P_k(\hat{A} - \tilde{A}) X_k + P_{\theta_k} \Theta_k G \tilde{C} V_k - W_k \tag{7.7}$$

where $\Psi_{\theta_k} = P_{\theta_k} \Gamma_{\theta_k}$, $\tilde{A} = \text{diag}[A \dots A], V_k = [{v_k^1}^T \dots {v_k^N}^T]^T$ and $W_k = [{w_k^1}^T \dots {w_k^N}^T]^T$. As a result, by setting $\xi_k = [X_k^T \ e_k^T]^T$ and $\eta_k = [W_k^T \ V_k^T]^T$ we obtain the combined system-error dynamics as:

$$\xi_{k+1} = \begin{bmatrix} \tilde{A} & 0 \\ P_{\theta_k}(\hat{A} - \tilde{A}) & \Psi_{\theta_k} \end{bmatrix} \xi_k + \begin{bmatrix} \tilde{I} & 0 \\ -I & P_{\theta_k} \Theta_k G \tilde{C} \end{bmatrix} \eta_k \tag{7.8}$$

## 7.3 Necessary and Sufficient Conditions for Mean-Square Stability

In this section, we provide a necessary and sufficient condition for the mean-square stability. This notion of stability means:

$$\lim_{k \to \infty} E[\|e_k\|^2] = 0 \tag{7.9}$$

We are ready now to state our theorem:

**Theorem 7.1** If the system (7.1) is asymptotically stable, then the error system (7.7) is mean-square stable (with $\eta_k \equiv 0$) if and only if there exist a set of matrices $\{T\}_{i=1}^M > 0$ that satisfy:

$$\Psi_i^T \left( \sum_{j=1}^M \lambda_{ij} T_j \right) \Psi_i - T_i < 0 \tag{7.10}$$

where $[\lambda_{ij}] = \Lambda$.

If the system (7.1) was not asymptotically stable, then the error system (7.7) is mean-square stable if in addition $\hat{A} = \tilde{A}$.

***Proof:*** If the system (7.1) is asymptotically stable, then the second term in (7.7) vanishes exponentially as $k \to \infty$.
Therefore, the stability of (7.7) is equivalent to the auxiliary system:

$$e_{k+1} = \Psi_{\theta_k} e_k \tag{7.11}$$

The key here is to note that (7.11) is a *Markovian jump linear system.* According to Costa et al. (1993), the system is mean-square stable iff there exist a set of positive-definite matrices $\{T\}_{i=1}^{M} > 0$ that satisfy (7.10).

If the system (7.1) was not asymptotically stable and $\hat{A} = \tilde{A}$, then (7.7) becomes decoupled from (7.1), so its stability becomes equivalent to the stability of (7.11). ■

Since the conditions in Theorem 7.1 are just a system of linear matrix inequalities (LMIs), they can be solved efficiently via available solvers.

A great simplification can occur in the special case of Bernoulli erasure channels. It can be seen, in this case, that we have $\lambda_{ij} = \lambda_j$. Therefore, a simplified version of Theorem 7.1 containing a single Lyapunov inequality can be stated:

**Theorem 7.2** If $\lambda_{ij} = \lambda_j$ and if the system (7.1) was asymptotically stable, then the error system (7.7) is mean-square stable iff there exist a matrix $T > 0$ that satisfies the Lyapunov inequality:

$$\sum_{j=1}^{M} \lambda_j \Psi_j^T T \Psi_j - T < 0 \tag{7.12}$$

If the system (7.1) was not asymptotically stable, then we need in addition $\hat{A} = \tilde{A}$.

***Proof:*** Similar to proof of Theorem 7.1, we study the stability of (7.11). According to Costa et al. (1993), the condition $\lambda_{ij} = \lambda_j$ implies that the system is mean-square stable iff there exist a matrix $T > 0$ solving (7.12).
The second statement follows using the same argument in the proof of Theorem 7.1. ■

## 7.4 Sufficient Conditions for Mean Stability for Markovian and Arbitrary Losses

Since the number of matrix inequalities in Theorem 7.1 might be large, it might be cumbersome to try to solve them. Therefore, it is useful to have some easily checking sufficient conditions for a weaker notion of stability. Mean stability requires that the mean of the error

vanishes asymptotically:

$$\lim_{k\to\infty} \|E[e_k]\| = 0 \tag{7.13}$$

and the error covariance boundedness requires:

$$\forall\, k,\ \|E[e_k e_k^T]\| < \infty \tag{7.14}$$

It is noteworthy that this notion was considered in Stanković et al. (2009), and we generalize their results by providing sufficient conditions valid for Markovian packet dropouts and arbitrary dropouts.

Taking the expectation of both sides of (7.7) and denoting $\bar{e}_k = E[e_k]$:

$$\bar{e}_{k+1} = \sum_{i=1}^{M} \pi_k^{(i)} \Psi_i \bar{e}_k + \sum_{i=1}^{M} \pi_k^{(i)} P_i (\hat{A} - \tilde{A}) \bar{X}_k \tag{7.15}$$

We will utilize the following lemma which was proved in Stanković et al. (2009):

**Lemma 7.1** *((Stanković et al., 2009))* Let $P_i$ be partitioned into blocks $P_i^{j\ell}$, then there exists a matrix norm $\|.\|_*$ such that:

$$\|\Psi_i\|_* \le c_i = \max_j \sum_{\ell=1}^{N} a_{j\ell}^i b_\ell^i \tag{7.16}$$

where $\rho(\Gamma_i^\ell) < b_\ell^i, a_{j\ell}^i = \rho(P_i^{j\ell})$ and $\rho$ denotes the spectral radius.

We are ready now to state a sufficient condition for the stability in the presence of Markov distribution:

**Theorem 7.3** Denote $c = [c_1 \dots c_M]^T$ and let $\pi_s$ be the dominant left eigenvector of $\Lambda$ with its sum of components equal 1.

If the system (7.1) was asymptotically stable and $\pi_s c < 1$ , then $\lim_{k\to\infty} \|E[e_k]\| = 0$. If (7.1) was not asymptotically stable, then we need the extra condition $\hat{A} = \tilde{A}$.

***Proof:*** Utilizing the norm bound (7.16) in (7.15) and using the triangle inequality:

$$\left\| \sum_{i=1}^{M} \pi_k^{(i)} \Psi_i \right\|_* \le \sum_{i=1}^{M} \pi_k^{(i)} \|\Psi_i\|_* \le \sum_{i=1}^{M} \pi_k^{(i)} c_i = \pi_k c$$

According to the Perron-Frobenius theory of Markov transition matrices (Meyer, 2000), the probability distribution $\pi_k$ converges to a steady-state distribution which is the left eigenvector corresponding to the eigenvalue 1 of the matrix $\Lambda$.

Therefore, for any $\varepsilon > 0$ there exists $k_\circ$ such that $\forall k \geq k_\circ, |\pi_k^{(i)} - \pi_s^{(i)}| < \varepsilon$. ($k_\circ$ is independent of $i$)
If $\pi_s c < 1$ and we choose $\varepsilon = (1 - \pi_s c)/(2\sum_i c_i)$, then

$$\forall k \geq k_\circ, \quad \pi_k c < \pi_s c + \varepsilon \textstyle\sum_i c_i = \frac{1}{2}(\pi_s c + 1) < 1$$

and since (7.1) is asymptotically stable, $\lim_{k\to\infty} \|E[e_k]\| = 0$ holds.

The second statement follows using the same argument in the proof of Theorem 7.1. ■

**Remark 7.1** For Bernoulli packet dropouts, the condition in Theorem 7.3 reduces to the condition in Stanković et al. (2009) since the $\pi_k$ is constant and equals $\pi_s$.

We provide now a sufficient condition valid for any *arbitrary* distribution:

**Theorem 7.4** Denote $c_m = \max_i c_i$ and let $\pi_k$ be arbitrary probability distribution. If the system (7.1) was asymptotically stable and $c_m < 1$ , then $\lim_{k\to\infty} \|E[e_k]\| = 0$.
If (7.1) was not asymptotically stable, then we need the extra condition $\hat{A} = \tilde{A}$.

***Proof:*** Using the fact that $\sum_i \pi_k^{(i)} = 1$:

$$\left\| \sum_{i=1}^{M} \pi_k^{(i)} \Psi_i \right\|_* \leq \sum_{i=1}^{M} \pi_k^{(i)} c_i \leq c_m \sum_{i=1}^{M} \pi_k^{(i)} = c_m < 1$$

since (7.1) is asymptotically stable, $\lim_{k\to\infty} \|E[e_k]\| = 0$ holds.
The second statement follows the same argument in the proof of Theorem 7.1. ■

We state now similar theorems concerning the boundedness of the error covariance (7.14). Their proofs are similar to those of Theorems 7.3 and 7.4, therefore we omit it.

**Theorem 7.5** Denote $c' = [c_1^2 \dots c_M^2]^T$,[1] let $\pi_s$ be the dominant left eigenvector of $\Lambda$. If the system (7.1) was asymptotically stable and $\pi_s c' < 1$ , then $\forall k, \left\|E[e_k e_k^T]\right\| < \infty$. If (7.1) was not asymptotically stable, then we need the extra condition $\hat{A} = \tilde{A}$.

**Theorem 7.6** Denote $c_m^{'} = \max_i c_i^2$ and let $\pi_k$ be arbitrary probability distribution. If the system (7.1) was asymptotically stable and $c_m^{'} < 1$ , then $\forall k, \left\|E[e_k e_k^T]\right\| < \infty$.
If (7.1) was not asymptotically stable, then we need the extra condition $\hat{A} = \tilde{A}$.

[1]The superscript here denotes power.

## 7.5 Simulation

In this section, we give examples on the results. Note that we are studying stability only, so there was no attempt to optimize the estimation variables involved.

### 7.5.1 Example 1

Consider the following unstable system with two estimators:

$$A = 1.1, C = [3 \ \ -0.5]^T, Q = 0.2, R = 0.2I_2,$$

Both estimators have full knowledge of the system dynamics and we use the following estimator gains:

$$K_{11} = 0.67871, K_{12} = 0.97979, K_{21} = 0.39943, K_{22} = 0.82088$$

For simplicity, we assume Markovian packet dropouts only in the links between the system and the estimators. Therefore, we have failure rates $p_1, q_1$ and the recovery rates $p_2, q_2$. The combined Markov chain will have 4 states.

First, we study the mean-square stability according to Theorem 7.1. We fix $q_1, p_2$ and we plot the stability region curve. Figure 7.3 shows stability regions curves for different values of $q_1, p_2$.

Second, we study the mean stability ($\lim_{k\to 0} E[e_k] = 0$) for the same system according to Theorem 7.3. Figure 7.4 shows stability regions curves for different values of $q_1, p_2$. Since Theorem 7.3 gives sufficient conditions only, the curves are expected to be conservative.

### 7.5.2 Example 2

Consider the following stable system with two estimators:

$$A = \begin{bmatrix} 0.3 & 0.2 & 0 \\ -0.2 & 0.3 & 0.1 \\ 0 & -0.1 & 0.3 \end{bmatrix}, C = \begin{bmatrix} 1 & 0 & 0 \\ 0 & 0 & 1 \end{bmatrix}, Q = 0.2I_3,$$

$$R = 0.2I_2, \mathcal{X}_1 = \{1, 2\}, \mathcal{Y}_1 = \{1\}, \mathcal{X}_2 = \{2, 3\}, \mathcal{Y}_2 = \{2\}$$

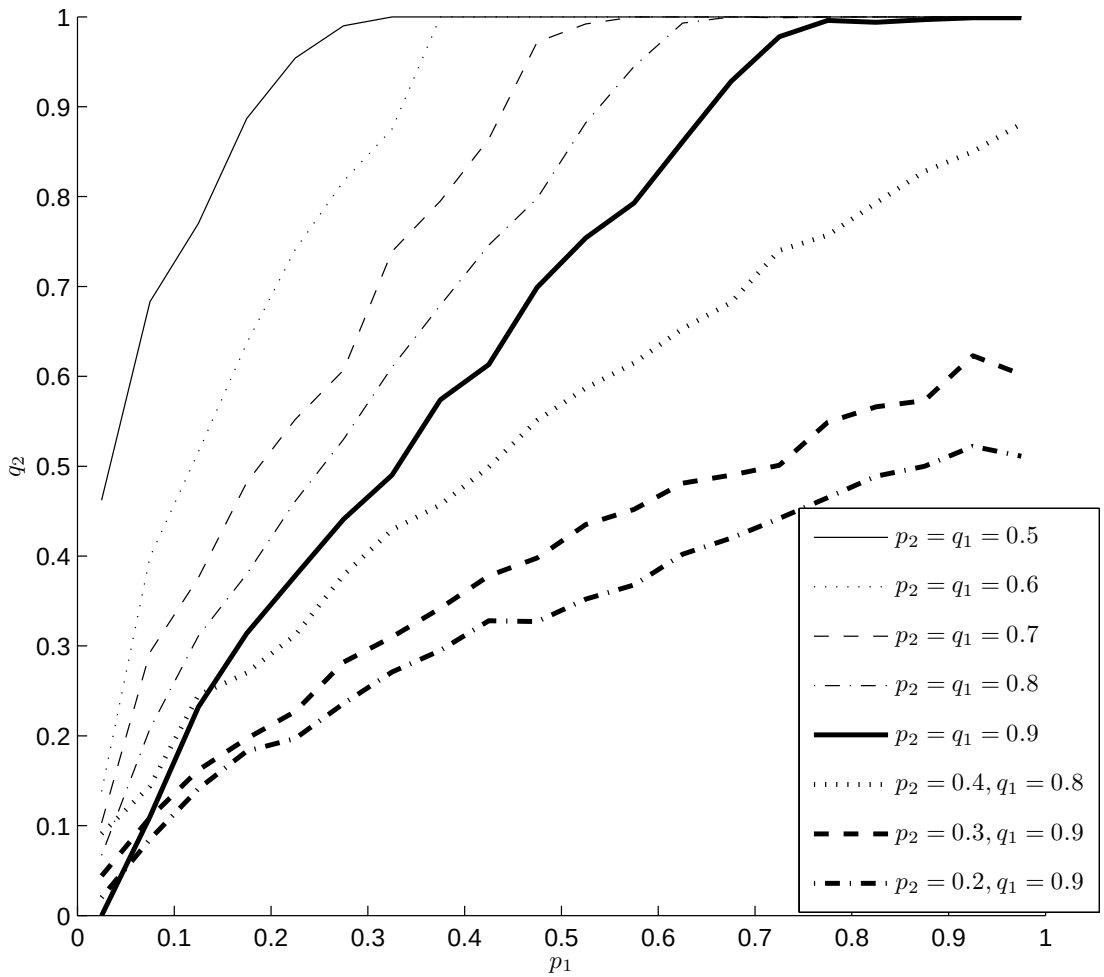


Figure 7.3: Mean-square stability region curves in the $(p_1, q_2)$-plane for different values of $q_1, p_2$ in Example 1 according to Theorem 7.1. The region above each curve is the stability region.

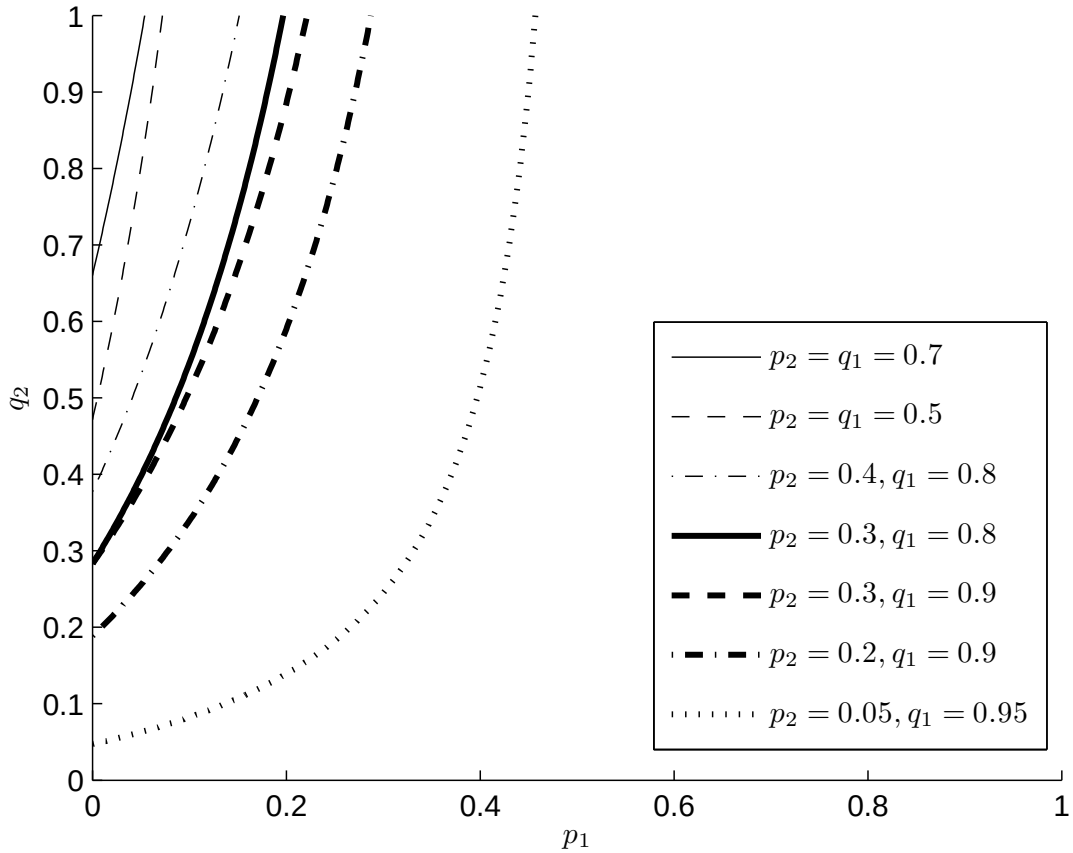


Figure 7.4: Guaranteed mean stability region curves in the $(p_1, q_2)$-plane for different values of $q_1, p_2$ in Example 1 according to Theorem 7.3. The region above each curve is the guaranteed stability region.

A randomly generated gain matrices are:

$$K_{11} = \text{diag}[2.50535\ 3.16842\ 3.17343]$$
$$K_{12} = \text{diag}[0.58089\ 0.95384\ 2.34343]$$
$$K_{21} = \text{diag}[1.97429\ 1.64868\ 3.65033]$$
$$K_{22} = \text{diag}[2.38867\ 0.34424\ 0.58037]$$

Consider a Bernoulli erasure channels with failure probabilities:

$$p_1 = 0.5, p_2 = 0.95, p_{12} = 0.1, p_{21} = 0.1$$

Applying Theorem 7.2, we are able to solve the Lyapunov inequality (7.12), so the system is mean-square stable. Figure 7.5-A shows a sample trajectory, with noises equal zeros, of the mean square error in this case.

We consider now that we have the following failure rates:

$$p_1 = 0.95, p_2 = 0.10, p_{12} = 0.1, p_{21} = 0.1$$

In this case, the Lyapunov inequality (7.12) was infeasible, therefore the system is not mean square stable. Figure 7.5-B shows an example of a sample trajectory of the mean square error.

The comparison between the two cases indicates that the system is more sensitive to the failure rate $p_1$ than $p_2$. Therefore, we have studied the stability region in the $(p_1, p_2)$ plane for $p_{12} = p_{21} = 0.1$ and it was observed that the mean-square stability is independent of $p_2$ and dependent only on $p_1$. There is a critical value for $p_1$ around 0.77, which is an observation close to the spirit of Sinopoli et al. (2004).

The result of applying Theorem 7.3 is inconclusive, since we obtain that $\pi_s c > 1$ for every pair $(p_1, p_2)$ with $p_{12} = p_{21} = 0.1$.

## 7.6 Conclusions and Future Work

In this work we have studied the stability of the consensus-based decentralized estimation scheme proposed in Stanković et al. (2009) in the presence of Markovian packet-dropouts. We have shown that the error system can be represented as a Markovian jump linear system, and using the available results for these systems we have derived necessary and sufficient LMI conditions for the mean-square stability of the error system, which simplifies greatly in the case of Bernoulli dropouts.

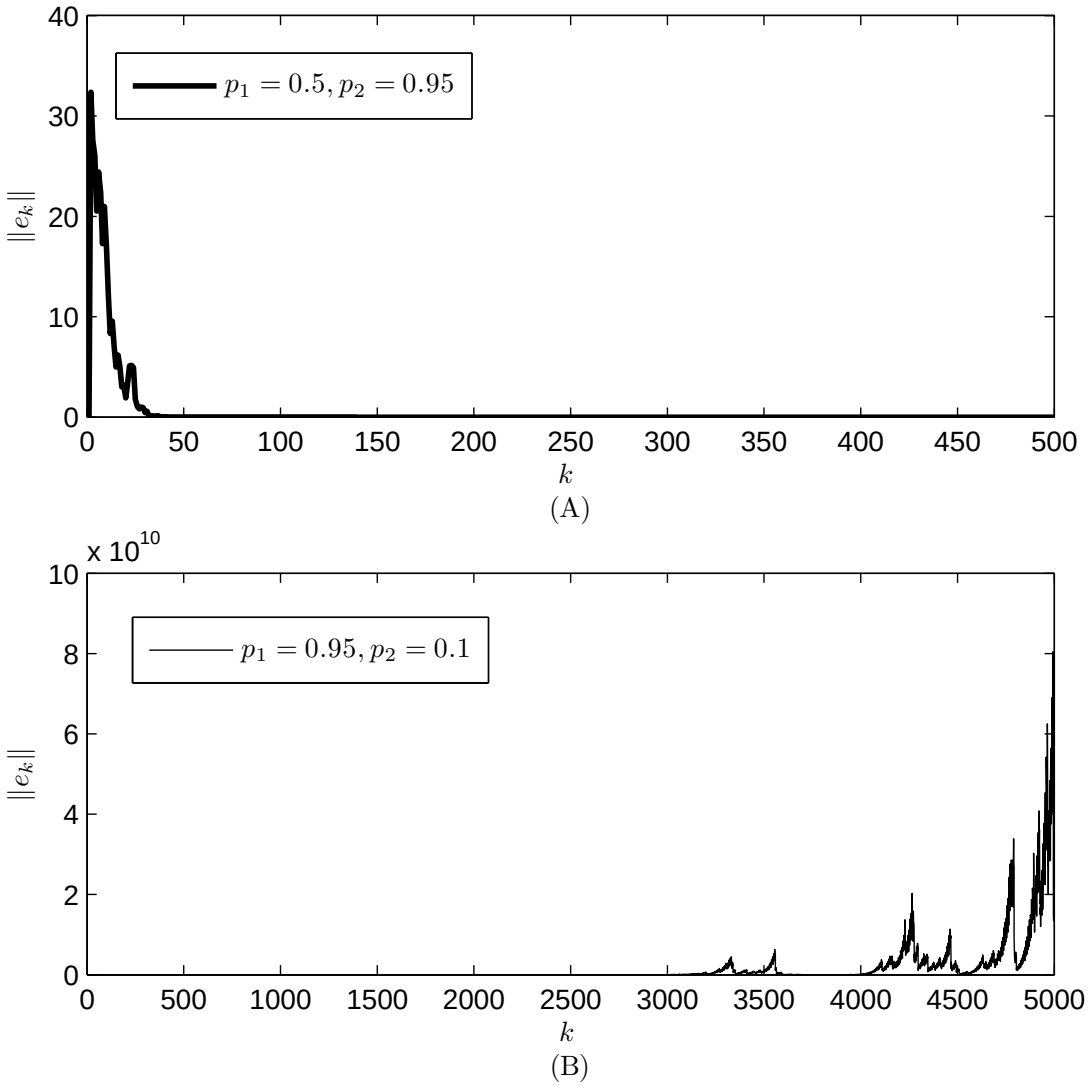


Figure 7.5: Sample trajectories of the mean-square errors for the estimators in Example 2 with two different set of probabilities: (A) a mean-square stable estimator (B) a mean-square unstable estimator.

For the sake of generalization of the stability results of Stanković et al. (2009), we provide sufficient conditions for the mean stability and error covariance boundedness for Markovian dropouts and arbitrary dropouts.

In terms of future directions, we mention few:

- The stability analysis of the estimator can be extended to more general settings. For example, analyzing the case of time-varying local estimation gains, or the other effects of networked systems such as time-delay. Also, it is interesting to analyze the stability of the closed-loop control system utilizing the discussed estimator in the loop.

- another important problem is stabilizability, where it is required to *design* the gains that guarantee the stability of the estimator. The problem becomes more interesting if the variables were chosen so as to minimize a certain cost function.

- The algorithm can be improved further. The algorithm uses a first-order consensus scheme only, more sophisticated and powerful consensus schemes can be used and analyzed.

# 8 Chapter

# Conclusion and Future Directions

## 8.1 Conclusions

We have considered in this work many problems in the area of DNCS with packet-losses which were not treated in the literature before, or treated from a completely different perspective. The main points discussed in the thesis can be summarized as:

- Our approach in the thesis was to formulate the decentralized control problem with the stochastic switching in the communication channel as a discrete-time Markovian Jump System (DMJLS).

- We have solved the three canonical problems of decentralized state-feedback, dynamic output feedback and filtering for interconnected DMJLSs with norm-bounded interactions. We considered two performance criteria: optimal $\mathscr{H}_\infty$ disturbance attenuation level, and guaranteed quadratic cost. For all cases, we provided necessary and sufficient LMI conditions, with rank-constraints for the later two. Extensions to the cases of Bernoulli-type Markov chains, and local-mode dependent control were discussed also.

  Although the decentralized control problem is hard to solve, we succeeded in utilizing the conservatism of decentralized control by allowing the interconnection matrices to fall into a class of structured uncertainty with norm-boundedness, and hence we obtained necessary and sufficient results which are rare in the decentralized control literature. The idea was to solve local $\mathscr{H}_\infty$ control problems for the local subsystems with shared scaling constants to take care of the coupling. The bounded real lemma and the $S$-procedure were the key tools in the proofs.

- In order to demonstrate the applicability of the results, we applied the developed schemes for dynamic routing in traffic networks with switching topology and intercon-

nected delays. The resulting LMIs were identical to the ones obtained in §3.3 although the proof was different where we utilize Lyapunov-Krasovskii functional. The reason for the similarity is that delays can be treated as convolution operators with unitary $\mathscr{L}_2$-gain, which is a sort of a norm-bounded uncertainty in the interconnections.

- The last chapter considered a slightly different problem from the previous chapters, where we considered stability analysis of a recently proposed overlapping *distributed* estimation scheme with Markovian packet-dropouts. We provided necessary and sufficient LMI conditions for the mean-quare stability, and sufficient conditions of the mean stability and error covariance boundedness.

## 8.2 Future Directions

We developed several directions regarding the work on decentralized networked control systems, for example:

- *Generalize the Results of the Thesis to Include Time-delays:* Time-delays can be formulated easily into delay-free systems via system augmentation approach. However, the controller dimension will be large, which is undesirable. Therefore, it is interesting to formulate a reduced-order controller design problem, which yields usually rank-constrained LMIs (El Ghaoui et al., 1993).

- *Apply Vector Lyapunov Methods to DNCSs*: The vector Lyapunov method is a well-known method to guarantee stability for large-scale systems (Šiljak, 1991, Michel et al., 1977). However, the utilization of this method in the context of large-scale switching systems is still missing. According to the model assigned for packet-losses (stochastic/deterministic), a corresponding analysis using Vector Lyapunov functions can be carried out.

- *Define a Controllability Notion for Switching Large-Scale Systems*: The seminal paper of (Wang et al., 1973) has defined the necessary and sufficient condition of the stabilizability with decentralized control using the notion of fixed modes. In other hand, controllability has been defined for Markovian jump systems (Ji et al., 1988), and deterministically switching systems (Ezzine et al., 1989). A combined notion of controllability of switching large-scale systems is still missing in the literature.

- *Investigate Fundamental Limitations on Decentralized $\mathscr{H}_\infty$ Control with Packet-Losses* To overcome the complex problem of analytically solving the $\mathscr{H}_\infty$ control problem, one

could think of investigating fundamental limitations on the $\mathscr{H}_\infty$ performance achievable. Ebihara et al. (2010) investigated this problem for discrete-time LTI systems. It will be interesting to derive similar results while incorporating packet-losses.

- *Generalize the Quadratic Invariance Property to Markovian Jump Systems:* The general problem of control with nonclassical information patterns remains open. However, there are subclasses of these problems that can be casted into convex optimization problems. The widest known class is the class of quadratically invariant controllers (Rotkowitz et al., 2006). It is interesting to extend these results to DMJLSs for the purpose of applying it to DNCSs.

- *Compare the Riccati Equation and LMI Solutions for $\mathscr{H}_\infty$ Control of DMJLSs:* We presented in §2.5.1 an LMI solution for the state feedback $\mathscr{H}_\infty$ control problem for DMJLSs. It is interesting to compare this solution and the solution via Riccati equations (Costa et al., 1996).

- *Resource Allocation of the network resources in decentralized control systems:* The problem of allocating efficiently the communication resources in NCSs is important. Galbusera et al. (2010) studied the resource allocation problem with $N$ decoupled systems. It is interesting to examine the problem when coupling exists between the subsystems.

# Bibliography


Abdollahi, F. and Khorasani, K. (2010). A decentralized markovian jump $\mathscr{H}_\infty$ control routing strategy for mobile multi-agent networked systems. *To Appear in IEEE Transactions on Control Systems Technology*. doi:10.1109/TCST.2010.2046418.

Abou-Kandil, H., Freiling, G., and Jank, G. (1995). On the solution of discrete-time Markovian jump linear quadratic control problems. *Automatica*, 31(5):765–768.

Ait-Rami, M. and El Ghaoui, L. (1996). LMI optimization for nonstandard Riccati equations arising in stochastic control. *IEEE Transactions on Automatic Control*, 41(11):1666–1671.

Alessio, A. and Bemporad, A. (2008). Stability conditions for decentralized model predictive control under packet drop communication. In *American Control Conference, 2008*, pages 3577–3582.

Anderson, B. D. O. and Moore, J. B. (1979). *Optimal Filtering*. Prentice Hall.

Antsaklis, P. and Baillieul, J. (2004). Special issue on networked control systems. *IEEE Transactions on Automatic Control*, 49(9):1421–1423.

Antsaklis, P. and Baillieul, J. (2007). Special issue on technology of networked control systems. *Proceedings of the IEEE*, 95(1):5–8.

Azimi-Sadjadi, B. (2003). Stability of networked control systems in the presence of packet losses. In *Proceedings of 2003 IEEE Conference on Decision and Control*, pages 676–681.

Baglietto, M., Parisini, T., and Zoppoli, R. (2001). Distributed-information neural control: The case of dynamic routing in traffic networks. *IEEE Transactions on Neural Networks*, 12(3):485–502.

Bakule, L. (2008). Decentralized control: an overview. *Annual Reviews in Control*, 32(1):87–98.

Bakule, L. and de la Sen, M. (2010). Decentralized resilient $\mathscr{H}_\infty$ observer-based control for a class of uncertain interconnected networked systems. In *American Control Conference (ACC), 2010*, pages 1338–1343.

Bauer, N., Donkers, M., Heemels, W., and van de Wouw, N. (2010). An approach to observer-based decentralized control under periodic protocols. In *American Control Conference (ACC), 2010*, pages 2125–2131. ISSN 0743-1619.

Blondel, V. and Tsitsiklis, J. (2000). A survey of computational complexity results in systems and control. *Automatica*, 36(9):1249–1274.

Boukas, E. (2009). $\mathscr{H}_\infty$ control of discrete-time Markov jump systems with bounded transition probabilities. *Optimal Control Applications and Methods*, 30(5):477–494.

Boukas, E. and Shi, P. (1997). $\mathscr{H}_\infty$ control for discrete-time linear systems with Markovian jumping parameters. In *IEEE Conference on Decision and Control, 36 th, San Diego, CA*, pages 4134–4139.

Boukas, E. and Shi, P. (1998). Stochastic stability and guaranteed cost control of discrete-time uncertain systems with Markovian jumping parameters. *International Journal of Robust and Nonlinear Control*, 8(13):1155–1167.

Boyd, S., El Ghaoui, L., Feron, E., and Balakrishnan, V. (1994). *Linear matrix inequalities in system and control theory*. SIAM, Philadelphia, PA.

Bushnell, L. (2001). Special issue on networks and control. *IEEE Control Systems Magazine*, 21(1):22–23.

Cantoni, M., Weyer, E., Li, Y., Ooi, S., Mareels, I., and Ryan, M. (2007). Control of large-scale irrigation networks. *Proceedings of the IEEE*, 95(1):75–91.

Cao, Y. and Lam, J. (1999). Stochastic stabilizability and $\mathscr{H}_\infty$ control for discrete-time jump linear systems with time delay. *Journal of the Franklin Institute*, 336(8):1263–1281.

Carli, R., Chiuso, A., Schenato, L., and Zampieri, S. (2008). Distributed Kalman filtering based on consensus strategies. *IEEE Journal on Selected Areas in Communications*, 26(4):622–633.

Cattivelli, F. and Sayed, A. (2010). Diffusion strategies for distributed Kalman filtering and smoothing. *IEEE Transactions on Automatic Control*, 55(9):2069–2084.

Cheng, C. (1997). Disturbances attenuation for interconnected systems by decentralized control. *International Journal of Control*, 66(2):213–224.

Chiuso, A. and Schenato, L. (2011). Information fusion strategies and performance bounds in packet-drop networks. *Automatica (provisionally accepted).*

Costa, O. and Do Val, J. (1996). Full Information $\mathscr{H}_\infty$-Control for Discrete-Time Infinite Markov Jump Parameter Systems. *Journal of Mathematical Analysis and Applications*, 202(2):578–603.

Costa, O., Fragoso, M., and Marques, R. (2005). *Discrete-time Markov jump linear systems*. Springer Verlag.

Costa, O. and Marques, R. (1998). Mixed $\mathcal{H}_2/\mathcal{H}_\infty$-control of discrete-time Markovian jump linear systems. *IEEE Transactions on Automatic Control*, 43(1):95–100.

Costa, O. L. V. and Fragoso, M. D. (1993). Stability results for discrete-time linear systems with Markovian jumping parameters. *Journal of Mathematical Analysis and Applications*, 179(1):154–178.

D'Andrea, R. and Dullerud, G. (2003). Distributed control design for spatially interconnected systems. *IEEE Transactions on Automatic Control*, 48(9):1478–1495.

Deliu, C., Stoorvogel, A., Saberi, A., Roy, S., and Malek, B. (2010). Time varying controllers in discrete-time decentralized control. In *Proceedings of the 48th IEEE Conference on Decision and Control, 2009 held jointly with the 2009 28th Chinese Control Conference. CDC/CCC 2009*, pages 1627–1631.

do Val, J., Geromel, J., and Goncalves, A. (2002). The $\mathscr{H}_2$-control for jump linear systems: cluster observations of the Markov state. *Automatica*, 38(2):343–349.

Ebihara, Y. and Sebe, N. (2010). Decentralized control for discrete-time LTI systems: Lower bound analysis of $\mathscr{H}_\infty$ performance achievable via LTI controllers. In *American Control Conference (ACC), 2010*, pages 5602–5607.

El Ghaoui, L. and Gahinet, P. (1993). Rank minimization under LMI constraints: A framework for output feedback problems. In *European Control Conference*, pages 1176–1179.

El Ghaoui, L., Oustry, F., and Ait-Rami, M. (1997). A cone complementarity linearization algorithm for static output-feedback and related problems. *IEEE transactions on Automatic Control*, 42(8):1171–1176.

Elia, N. (2005). Remote stabilization over fading channels. *Systems & Control Letters*, 54(3):237–249.

Elia, N. and Eisenbeis, J. (2010). Limitations of linear control over packet drop networks. *To Appear in IEEE Transactions on Automatic Control*. doi:10.1109/TAC.2010.2080150.

Ezzine, J. and Haddad, A. (1989). Controllability and observability of hybrid systems. *International Journal of Control*, 49(6):2045–2055.

Fagnani, F. and Zampieri, S. (2009). Average Consensus with Packet Drop Communication. *SIAM Journal on Control and Optimization*, 48(1):102–133.

Farhadi, A. and Ahmed, N. (2009). Decentralized suboptimal control via limited capacity channels. In *Proceedings of the 2009 conference on American Control Conference*, pages 3525–3530.

Fragoso, M., do Val, J., and Pinto Jr, D. (1995). Jump linear $\mathscr{H}_\infty$ control: the discrete-time case. *Control Theory Adv. Tech*, 10(4):1459–1474.

Galbusera, L., Gatti, N., and Romani, C. (2010). A mechanism design approach to the stabilization of networked dynamical systems. In *Proceedings of the 48th IEEE Conference on Decision and Control, 2009 held jointly with the 2009 28th Chinese Control Conference. CDC/CCC 2009*, pages 5845–5850.

Gao, H. and Chen, T. (2007). $\mathscr{H}_\infty$ estimation for uncertain systems with limited communication capacity. *IEEE Transactions on Automatic Control*, 52(11):2070–2084.

Geromel, J., Gonçalves, A., and Fioravanti, A. (2009). Dynamic output feedback control of discrete-time markov jump linear systems through linear matrix inequalities. *SIAM Journal on Control and Optimization*, (2):573–593.

Gilbert, E. (1960). Capacity of a burst-noise channel. *Bell Systems Technical Journal*, 39(9):1253–1265.

Gonçalves, A., Fioravanti, A., and Geromel, J. (2009). $\mathscr{H}_\infty$ filtering of discrete-time Markov jump linear systems through linear matrix inequalities. *IEEE transactions on Automatic Control*, 54(6):1347–1351.

Gong, Z. and Aldeen, M. (1997). Stabilization of decentralized control systems. *Journal of Mathematical Systems, Estimation, and Control*, 7(1):111–114.

Graham, S., Baliga, G., and Kumar, P. (2009). Abstractions, architecture, mechanisms, and a middleware for networked control. *IEEE Transactions on Automatic Control*, 54(7):1490–1503.

Grant, M. and Boyd, S. (2010). CVX: Matlab software for disciplined convex programming, version 1.21. http://cvxr.com/cvx.

Grigoriadis, K. and Skelton, R. (1996). Low-order control design for LMI problems using alternating projection methods. *Automatica*, 32(8):1117–1125.

Gupta, V., Dana, A., Hespanha, J., Murray, R., and Hassibi, B. (2009a). Data Transmission Over Networks for Estimation and Control. *IEEE Transactions on Automatic Control*, 54(8):1807–1819.

Gupta, V., Hassibi, B., and Murray, R. (2007). Optimal LQG control across packet-dropping links. *Systems & Control Letters*, 56(6):439–446.

Gupta, V., Martins, N., and Baras, J. (2009b). Optimal output feedback control using two remote sensors over erasure channels. *IEEE Transactions on Automatic Control*, 54(7):1463–1476.

Hassibi, A., Boyd, S., and How, J. (1999). Control of asynchronous dynamical systems with rate constraints on events. In *IEEE Conference on Decision and Control*, volume 2, pages 1345–1351.

Heemels, W., Teel, A., van de Wouw, N., and Nešić, D. (2010). Networked control systems with communication constraints: Tradeoffs between transmission intervals, delays and performance. *IEEE Transactions on Automatic Control*, 55(8):1781–1796.

Hespanha, J., Naghshtabrizi, P., and Xu, Y. (2007). A Survey of Recent Results in Networked Control Systems. *Proceedings of the IEEE*, 95(1):138–162.

Huang, M. and Dey, S. (2007). Stability of Kalman filtering with Markovian packet losses. *Automatica*, 43(4):598–607.

Iftar, A. and Davison, E. (1998). A decentralized discrete-time controller for dynamic routing. *International Journal of Control*, 69(5):599–632.

Imer, O., Yuksel, S., and Basar, T. (2006). Optimal control of LTI systems over communication networks. *Automatica*, 42(9):1429–1440.

Ishii, H. (2007). $\mathscr{H}_\infty$ control with limited communication and message losses. *Systems & Control Letters*, 57(4):322–331.

Ishii, H. and Francis, B. (2002). Stabilization with control networks. *Automatica*, 38(10):1745–1751.

Ji, Y. and Chizeck, H. (1988). Controllability, observability and discrete-time Markovian jump linear quadratic control. *International Journal of Control*, 48(2):481–498.

Ji, Y., Chizeck, H., Feng, X., and Loparo, K. (1991). Stability and control of discrete-time jump linear systems. *Control Theory and Advanced Technology*, 7(2):247–270.

Jiang, S., Voulgaris, P., and Neogi, N. (2008). Distributed control over structured and packet-dropping networks. *International Journal of Robust and Nonlinear Control*, 18(14):1389 – 1408.

Jin, X.-Z. and Yang, G.-H. (2009). Distributed robust adaptive tracking control with lossy interconnection links and bounded disturbances. In *American Control Conference, 2009. ACC '09.*, pages 5689–5694.

Khan, U. and Moura, J. (2008). Distributing the Kalman filter for large-scale systems. *IEEE Transactions on Signal Processing*, 56(10):4919 –4935.

Kushner, H. (1967). *Stochastic stability and control*. Academic Press. ISBN 0124301509.

Langbort, C., Chandra, R., and D'Andrea, R. (2004). Distributed control design for systems interconnected over an arbitrary graph. *IEEE Transactions on Automatic Control*, 49(9):1502–1519.

Langbort, C., Gupta, V., and Murray, R. M. (2005). Distributed control over failing channels. In *Workshop on Networked Embedded Sensing and Control*, Lecture Notes in Control and information sciences, pages 325–342. Springer.

Leonard, N., Paley, D., Lekien, F., Sepulchre, R., Fratantoni, D., and Davis, R. (2007). Collective motion, sensor networks, and ocean sampling. *Proceedings of the IEEE*, 95(1):48–74.

Li, H., Wu, Q., and Huang, H. (2010). Control of spatially interconnected systems with random communication losses. *Acta Automatica Sinica*, 36(2):258–266.

Li, L., Ugrinovskii, V., and Orsi, R. (2007). Decentralized robust control of uncertain Markov jump parameter systems via output feedback. *Automatica*, 43(11):1932–1944.

Li, L. and Zhou, K. (2002). An approximation approach to decentralized $\mathscr{H}_\infty$ control. In *4th World Congress on Intelligent Control and Automation, Shanghai, China*.

Liang, Y., Chen, T., and Pan, Q. (2010). Optimal Linear State Estimator With Multiple Packet Dropouts. *Automatic Control, IEEE Transactions on*, 55(6):1428–1433.

Lunze, J. (1992). *Feedback control of large-scale systems*. Prentice Hall, Englewood Cliffs, New Jersey.

MacMartin, D. (2003). Control challenges for extremely large telescopes. *Smart Structures and Materials 2003*, 5054:275–286.

Mahmoud, M. S. and Ismail, A. (2009). A decentralized reliable automatic generation control. In *International Conference on Electric Power and Energy Conversion Systems, 2009. EPECS '09*, pages 1–6.

Matveev, A. and Savkin, A. (2005). Decentralized stabilization of linear systems via limited capacity communication networks. In *44th IEEE Conference on Decision and Control, 2005 and 2005 European Control Conference. CDC-ECC'05*, volume 44, pages 1155–1161.

Mazumder, S., Acharya, K., and Tahir, M. (2005). " Wireless" control of spatially distributed power electronics. In *Twentieth Annual IEEE Applied Power Electronics Conference and Exposition, 2005. APEC 2005*, pages 75–81.

Mazumder, S., Acharya, K., and Tahir, M. (2009). Towards Realization of a Control-Commnunication Framework for Interactive Power Networks. In *IEEE Energy 2030 Conference, 2008b(ENERGY 2008)*, pages 1–8.

Meyer, C. D. (2000). *Matrix analysis and applied linear algebra*. SIAM.

Michel, A. and Miller, R. (1977). *Qualitative analysis of large scale dynamical systems*. Academic Press. ISBN 0124938507.

Moheimani, S. and Petersen, I. (1997a). Optimal quadratic guaranteed cost control of a class of uncertain time-delay systems. *IEE Proceedings-Control Theory and Applications*, 144(2):183 –188.

Moheimani, S., Savkin, A., and Petersen, I. (1995). A Connection Between $\mathscr{H}_\infty$ Control and the Absolute Stabilizability of Discrete-Time Uncertain Linear-Systems. *Automatica*, 31(8):1193–1195.

Moheimani, S., Savkin, A., and Petersen, I. (1997b). Minimax optimal control of discrete-time uncertain systems with structured uncertainty. *Dynamics and Control*, 7(1):5–24.

Momeni, A. and Aghdam, A. (2009). Overlapping control systems with delayed communication channels: Stability analysis and controller design. In *American Control Conference, 2009. ACC '09.*, pages 4235–4241.

Murray, R., Astrom, K., Boyd, S., Brockett, R., and Stein, G. (2003). Future directions in control in an information-rich world. *IEEE Control Systems Magazine*, 23(2):20–33.

Murray, R., Fax, J., and Saber, R. O. (2007). Consensus and cooperation in multi-agent networked systems. *Proceedings of IEEE*, 95(1):215–233.

Murtadha, M. and Bettayeb, M. (2010). Stability analysis of decentralized overlapping estimation scheme with Markovian packet dropouts. In *2009 IEEE International Symposium on Signal Processing and Information Technology (ISSPIT)*, pages 372–377. IEEE.

Nair, G., Fagnani, F., Zampieri, S., and Evans, R. (2007). Feedback control under data rate constraints: an overview. *Proceedings of the IEEE*, 95(1):108–137.

Oh, S. and Sastry, S. (2006). Distributed Networked Control System with Lossy Links: State Estimation and Stabilizing Communication Control. In *2006 45th IEEE Conference on Decision and Control*, pages 1942–1947.

Oh, S., Schenato, L., Chen, P., and Sastry, S. (2007). Tracking and coordination of multiple agents using sensor networks: system design, algorithms and experiments. *Proceedings of the IEEE*, 95(1):234–254.

Olfati-Saber, R. (2005). Distributed Kalman filter with embedded consensus filters. In *44th IEEE Conference on Decision and Control, 2005 and 2005 European Control Conference. CDC-ECC'05*, pages 8179–8184.

Orsi, R., Helmke, U., and Moore, J. (2006). A Newton-like method for solving rank constrained linear matrix inequalities. *Automatica*, 42(11):1875–1882.

Palhares, R., de Souza, C., and Peres, P. (2001). Robust $\mathscr{H}_\infty$ control for uncertain discrete-time state-delayed linear systems with markovian jumping parameters. In *Proc. 3rd IFAC Workshop on Time Delay Systems*, pages 107–112.

Petersen, I. and James, M. (1996). Performance analysis and controller synthesis for nonlinear systems with stochastic uncertainty constraints. *Automatica*, 32(7):959–972.

Petersen, I., McFarlane, D., and Rotea, M. (1998). Optimal guaranteed cost control of discrete-time uncertain linear systems. *International Journal of Robust and Nonlinear Control*, 8(8):649–657.

Petersen, I., Ugrinovskii, V., and Savkin, A. (2000). *Robust control design using $\mathscr{H}_\infty$ methods*. Springer.

Quevedo, D., Silva, E., and Goodwin, G. (2008). Control over unreliable networks affected by packet erasures and variable transmission delays. *IEEE Journal on Selected Areas in Communications*, 26(4):672–685.

Recht, B., Fazel, M., and Parrilo, P. (2010). Guaranteed Minimum-Rank Solutions of Linear Matrix Equations via Nuclear Norm Minimization. *SIAM Review*, 52(3):471–501.

Robinson, C. and Kumar, P. (2008). Optimizing controller location in networked control systems with packet drops. *IEEE Journal on Selected Areas in Communications*, 26(4):661–671.

Rotkowitz, M. and Lall, S. (2006). A Characterization of Convex Problems in Decentralized Control. *IEEE Transactions on Automatic Control*, 51(2):274–286.

Sahebsara, M., Chen, T., and Shah, S. (2008). Optimal $\mathscr{H}_\infty$ filtering in networked control systems with multiple packet dropouts. *Systems & Control Letters*, 57(9):696–702.

Sandell Jr, N., Varaiya, P., Athans, M., and Safonov, M. (1978). Survey of decentralized control methods for large scale systems. *IEEE Transactions on Automatic Control*, 23(2):108–128.

Schenato, L. (2009). To zero or to hold control inputs with lossy links? *IEEE Transactions on Automatic Control*, 54(5):1093–1099.

Scorletti, G. and Duc, G. (2001). An LMI approach to dencentralized $\mathscr{H}_\infty$ control. *International Journal of Control*, 74(3):211–224.

Segall, A. (1977). The modeling of adaptive routing in data-communication networks. *IEEE Transactions on Communications*, 25(1):85–95.

Seiler, P. and Sengupta, R. (2001). Analysis of communication losses in vehicle control problems. In *Proceedings of the American Control Conference*, volume 2, pages 1491–1496.

Seiler, P. and Sengupta, R. (2003). A bounded real lemma for jump systems. *IEEE Transactions on Automatic Control*, 48(9):1651–1654.

Seiler, P. and Sengupta, R. (2005). An $\mathscr{H}_\infty$ -approach to networked control. *IEEE Transactions on Automatic Control*, 50(3):356–364.

Shi, L., Epstein, M., and Murray, R. (2010). Kalman filtering over a packet-dropping network: a probabilistic perspective. *IEEE Transactions on Automatic Control*, 55(3):594–604.

Shi, L., Ko, C., Jin, Z., Gayme, D., Gupta, V., Waydo, S., and Murray, R. (2005). Decentralized Control Accross Bit-Limited Communication Channels: An Example. In *Proceedings of the American Control Conference*, volume 5, page 3348.

Shi, P., Boukas, E., and Agarwal, R. (1999). Control of Markovian jump discrete-time systems with norm boundeduncertainty and unknown delay. *IEEE Transactions on Automatic Control*, 44(11):2139–2144.

Šiljak, D. (1991). *Decentralized control of complex systems*. Academic Press.

Sinopoli, B., Schenato, L., Franceschetti, M., Poolla, K., Jordan, M., and Sastry, S. (2004). Kalman filtering with intermittent observations. *IEEE Transactions on Automatic Control*, 49(9):1453–1464.

Sinopoli, B., Schenato, L., Franceschetti, M., Poolla, K., and Sastry, S. (2006). An LQG optimal linear controller for control systems with packet losses. In *44th IEEE Conference on Decision and Control, 2005 and 2005 European Control Conference. CDC-ECC'05*, pages 458–463.

Smith, S. and Seiler, P. (2003). Estimation with lossy measurements: jump estimators for jump systems. *IEEE Transactions on Automatic Control*, 48(12):2163–2171.

Spanos, D., Olfati-Saber, R., and Murray, R. (2005). Approximate distributed Kalman filtering in sensor networks with quantifiable performance. In *Proceedings of the 4th international symposium on Information processing in sensor networks*, pages 133–139.

Stankovic, M., Stipanovic, D., and Stankovic, S. (2010). Decentralized consensus based control methodology for vehicle formations in air and deep space. In *American Control Conference (ACC), 2010*, pages 3660–3665.

Stanković, S., Stanković, M., and Stipanović, D. (2009). Consensus based overlapping decentralized estimation with missing observations and communication faults. *Automatica*, 45(6):1397–1406.

Sun, Y. and El-Farra, N. (2008). Quasi-decentralized State Estimation and Control of Process Systems Over Communication Networks. In *Proceedings of the 47th IEEE Conference on Decision and Control*, pages 5468–5475.

Teo, R., Stipanovic, D., and Tomlin, C. (2003). Multiple vehicle control over a lossy datalink. In *Proceedings of the 4th Asian Control Conference*, pages 2063–2068.

Ugrinovskii, V. (2010). Distributed robust filtering with $\mathscr{H}_\infty$ consensus of estimates. In *American Control Conference (ACC), 2010*, pages 1374–1379.

Ugrinovskii, V., Petersen, I., Savkin, A., and Ugrinovskaya, E. (2000). Decentralized state-feedback stabilization and robust control of uncertain large-scale systems with integrally constrained interconnections. *Systems & Control Letters*, 40:107–119.

Ugrinovskii, V. and Pota, H. (2005). Decentralized control of power systems via robust control of uncertain Markov jump parameter systems. *International Journal of Control*, 78(9):662–677.

van Schendel, J., Donkers, M., Heemels, W., and van de Wouw, N. (2010). On dropout modelling for stability analysis of networked control systems. In *American Control Conference (ACC), 2010*, pages 555–561.

Walsh, G. C., Ye, H., and Bushnell, L. G. (2002). Stability analysis of networked control systems. *IEEE Transactions on Control Systems Technology*, 10(3):438–446.

Wan, P. and Lemmon, M. (2008). Distributed flow control using embedded sensor-actuator networks for the reduction of combined sewer overflow (cso) events. In *2007 46th IEEE Conference on Decision and Control*, pages 1529–1534.

Wang, S. and Davison, E. (1973). On the stabilization of decentralized control systems. *IEEE Transactions on Automatic Control*, 18(5):473–478.

Wang, X. and Chen, G. (2003). Small-world, scale-free and beyond. *IEEE Circuit and Systems Magazine*, 3(2):6–20.

Wang, X. and Lemmon, M. (2009). Finite-Gain $\mathscr{L}_2$ Stability in Distributed Event-Triggered Networked Control Systems with Data Dropouts. In *European Control Conference*.

Wang, Z., Yang, F., Ho, D., and Liu, X. (2006). Robust $\mathscr{H}_\infty$ filtering for stochastic time-delay systems with missing measurements. *IEEE Transactions on Signal Processing*, 54(7):2579–2587.

Wang, Z., Yang, F., Ho, D., and Liu, X. (2007). Robust $\mathscr{H}_\infty$ Control for Networked Systems With Random Packet Losses. *IEEE Transactions on Systems, Man and Cybernetics Part B*, 37(4):916 –924.

Wei, J. (2008). Stability analysis of decentralized networked control systems. In *7th World Congress on Intelligent Control and Automation, 2008. (WCICA 2008)*, pages 5477–5482.

Witsenhausen, H. (1968). A counterexample in stochastic optimum control. *SIAM Journal on Control*, 6:131–147.

Wu, L., Lam, J., Shu, Z., and Du, B. (2009). On stability and stabilizability of positive delay systems. *Asian Journal of Control*, 11(2):226–234.

Xiao, L., Boyd, S., and Lall, S. (2005). A scheme for asynchronous distributed sensor fusion based on average consensus. In *Fourth International Symposium on Information Processing in Sensor Networks*, pages 63–70.

Xiao, N., Xie, L., and Fu, M. (2009). Kalman filtering over unreliable communication networks with bounded Markovian packet dropouts. *International Journal of Robust and Nonlinear Control*, 19(16):1770–1786.

Xiong, J. and Lam, J. (2007). Stabilization of linear systems over networks with bounded packet loss. *Automatica*, 43(1):80–87.

Xu, Y. and Hespanha, J. (2005). Estimation under uncontrolled and controlled communications in networked control systems. In *44th IEEE Conference on Decision and Control, 2005 and 2005 European Control Conference. CDC-ECC'05*, 1, pages 842–847. Citeseer.

Yadav, V., Salapaka, M., and Voulgaris, P. (2010). Architectures for Distributed Controller With Sub-Controller Communication Uncertainty. *IEEE Transactions on Automatic Control*, 55(8):1765–1780.

Yakubovich, V. (1992). Nonconvex optimization problem: The infinite-horizon linear-quadratic control problem with quadratic constraints. *Systems & Control Letters*, 19(1):13–22.

Yang, P., Freeman, R., and Lynch, K. (2008). Multi-agent coordination by decentralized estimation and control. *IEEE Transactions on Automatic Control*, 53(11):2480–2496.

Yang, T., Ding, Z., and Yu, H. (2000). Research into quasi-decentralised control. In *Proceedings of the 3rd World Congress on Intelligent Control and Automation, 2000.*, pages 2893–2898.

You, K. and Xie, L. (2010). Minimum data rate for mean square stabilizability of linear systems with markovian packet losses. *To Appear in IEEE Transactions on Automatic Control*. doi:10.1109/TAC.2010.2068590.

Yu, J., Wang, L., Zhang, G., and Yu, M. (2009). Output feedback stabilisation of networked control systems via switched system approach. *International Journal of Control*, 82(9):1665–1677.

Yu, M., Wang, L., Chu, T., and Xie, G. (2004). Stabilization of networked control systems with data packet dropout and network delays via switching system approach. In *43rd IEEE Conference on Decision and Control, 2004. CDC*, pages 3539–3544.

Yue, D., Han, Q., and Lam, J. (2005). Network-based robust $\mathscr{H}_\infty$ control of systems with uncertainty. *Automatica*, 41(6):999–1007.

Yue, D., Han, Q., and Peng, C. (2004). State feedback controller design of networked control systems. *IEEE Transactions on Circuits and Systems—II: Express Briefs*, 51(11):640–644.

Yuksel, S. and Basar, T. (2007a). Communication constraints for decentralized stabilizability with time-invariant policies. *IEEE Transactions on Automatic Control*, 52(6):1060–1066.

Yuksel, S. and Basar, T. (2007b). Optimal signaling policies for decentralized multicontroller stabilizability over communication channels. *IEEE Transactions on Automatic Control*, 52(10):1969–1974.

Zhai, G., Ikeda, M., and Fujisaki, Y. (2001). Decentralized $\mathscr{H}_\infty$ controller design: a matrix inequality approach using a homotopy method. *Automatica*, 37(4):565–572.

Zhang, C. and Dullerud, G. (2007a). Decentralized Control with Communication Bandwidth Constraints. In *American Control Conference, 2007. ACC'07*, pages 1711–1716.

Zhang, W., Branicky, M., and Phillips, S. (2001). Stability of networked control systems. *IEEE Control Systems Magazine*, 21(1):84–99.

Zhang, W. A. and Yu, L. (2007b). Output feedback stabilization of networked control systems with packet dropouts. *IEEE Transactions on Automatic Control*, 52(9):1705–1710.

# Publications by the Author

## Journal Publications Out of the Thesis

(1) M. A. Al-Radhawi and M. Bettayeb, "An $\mathscr{H}_\infty$ Approach to Decentralized Networked Control Systems", *Submitted to IEEE Transactions on Automatic Control*, 2010.

(2) M. A. Al-Radhawi and M. Bettayeb, "Guaranteed Cost Decentralized Output-Feedback Control With Packet Losses: A Jump System Approach", *Submitted to International Journal of Control*, 2010.

(3) M. A. Al-Radhawi and M. Bettayeb, "Decentralized $\mathscr{H}_\infty$ - Filtering of Networked Control Systems: A Jump System Approach", *Submitted to International Journal of Adaptive Control and Signal Processing*, 2010.

(4) M. A. Al-Radhawi and M. Bettayeb, "Decentralized $\mathscr{H}_\infty$ Dynamic Routing Scheme with Switching Topology and Interconnected Delays", *Submitted to IEEE Transaction on Systems, Man, and Cybernetics, Part B: Cybernetics*, 2011.

## Conference Publications Out of the Thesis

(5) Muhammad A. S. Murtadha and M. Bettayeb, Stability analysis of decentralized overlapping estimation scheme with Markovian packet dropouts. In *the IEEE Symposium on Signal Processing and Information Technology, 2009 (ISSPIT2009)*, pp. 372–377, 2009, doi:10.1109/ISSPIT.2009.5407519.

(6) M. A. Al-Radhawi and M. Bettayeb, "Decentralized State-Feedback $\mathscr{H}_\infty$ - Control With Packet Losses: A Jump System Approach", *Submitted to the American Control Conference*, September 2010.

(7) M. A. Al-Radhawi and M. Bettayeb, "Decentralized State-Feedback Control of Markovian Jump Systems With Application to Networked Control", *Submitted to the IFAC World Congress*, October 2010.

(8) A. P. C. Gonçalves, A. R. Fioravanti, M. A. Al-Radhawi, J. C. Geromel, "$\mathscr{H}_\infty$ State Feedback Control of Discrete-time Markov Jump Linear Systems through Linear Matrix Inequalities", *Submitted to the 2011 IFAC World Congress*, October 2010.

## Other Publications

(9) A.S. Elwakil and M.A. Murtada, "All possible canonical second-order three-impedance class-A and class-B oscillators", *Electronics Letters*, 46:11, pp.748-749, 2010

(10) A.S. Elwakil and M.A. Al-Radhawi, "All Possible Second-Order Four-Impedance Two-Stage Colpitts Oscillators", *Conditionally Accepted in the IET Proceedings on Circuits and Systems*, 2010.

(11) Mahmoud Nabag, Muhammad Ali Al-Radhawi, and Maamar Bettayeb, "Model Reduction of Flat-Plate Solar Collector Using Time-Space Discretization", *Accepted in IEEE EnergyCon*, 2010.

(12) Muhammad Ali Al-Radhawi, Mahmoud Nabag and Maamar Bettayeb, "Balanced Model Reduction of Flat-Plate Solar Collector using Descriptor State-Space Formulation", *Accepted in the International Symposium on Environment Friendly Energies in Electrical Applications (EFEEA'10)*, 2010.

(13) Maamar Bettayeb, Mahmoud Nabag, Muhammad Ali Al-Radhawi, "Reduced Order Models For Flat-Plate Solar Collectors", *Accepted in IEEE GCC*, 2011.

(14) Muhammad Ali Al-Radhawi and Karim Abed-Meraim, "Parameter Estimation of Superimposed Damped Sinusoids Using Exponential Windows", *To be submitted to Signal Processing*, 2011.

# أنظمة التحكم الشبكية اللامركزية:
# التحكم والتقدير عبر القنوات الفاقدة للمعلومات

لـِ
**محمد علي سيد مرتضى الرضوي**

تحت إشراف
**الأستاذ الدكتور معمر علي بالطيب**

رسالة قدمت لإتمام متطلبات درجة الماجستير في العلوم في الهندسة الكهربائية والإلكترونية لقسم هندسة الكهرباء والحاسوب بجامعة الشارقة

## مـــلـــخـــص

في أنظمة التحكم التقليدية يتم افتراض أن قياسات النظام يتم إعادة توريدها بدون تأخير أو خلل عبر قنوات لا متناهية العرض النطاقي إلى محل مركزي تقع فيه المعالجة والتنفيذ، لكن هذين الافتراضين لم يعودا متحققين في العديد من أنظمة التحكم الحديثة.

أولاً، التقدم التقني في الاتصالات اللا سلكية والانخفاض في كلفة وحجم الإلكترونيات شجع استخدام الشبكات المشتركة للتخاطب بين مفردات نظام التحكم. أنظمة التحكم التي تستخدم الشبكات في دوائرها تسمى بـ(أنظمة التحكم الشبكية) والتي أطلق عليها (الجيل الثالث من أنظمة التحكم) خلفاً لسلفيها التحكم الرقمي والتماثلي. لكن بسبب آثار الشبكات السلبية كالتأخر الزمني وفقدان الحزم والتكميم الرديء نشأت مسائل تحكم جديدة تبحث بنشاط خلال العقد الأخير.

ثانياً، التحكم اللامركزي للأنظمة الهائلة يلعب دوراً متزايد الأهمية في المشاكل التطبيقية لإحكامه وكفاءته الحسابية وقابلية التحجم. التطبيقات تفوق العد حيث أنها تبدأ بأسراب الطائرات وشبكات الأجسام الآلية مروراً بأنظمة الطاقة ونظم نقل المياه وانتهاء بشبكات الإتصال وتحكم العمليات. لكن على الرغم من كل هذه الإيجابيات، فقد برهن تصميم المتحكمات اللا مركزية على كونه مسألة على قدر عال من الصعوبة والتعقيد تحليلياً.

الأبحاث في التراث كثيرة عند اعتبار إحدى المشكلتين فقط، لكن، الأبحاث في المشكلة المزدوجة لأنظمة التحكم الشبكية اللا مركزية ما زالت في مهدها. في هذه الدراسة، نقوم بدراسة مسائل التحكم والتقدير (الترشيح) المترافقة مع الأنظمة الشبكية اللا مركزية. حسب أفضل استقصائنا، فإن العديد من المسائل تعالج لأول مرة في هذه الأطروحة.

في النظام الذي ندرسه فإنا نعتبر الشبكة علي أنها مجرد قناة اتصال ماحية تتبع نموذج غلبرت–إليوت. فقدان المعلومات (الحزم) قد ينشأ من الإسقاط من قبل المسيّرات بسبب الإزدحام، أو الإسقاط من قبل المستقبل بسبب طول التأخير أو تلف محتوى الحزمة، أو الإسقاط من قبل المرسل لعدم التمكن من النفاذ إلى الشبكة. هذا الفقدان له آثار سلبية قد تعرض استقرار النظام للخطر أو تسبب رداءة في الأداء. إن مقاربتنا

للمسألة ستكون عبر نمذجة النظام الكلي كنظام خطي متبدل ماركوفياً متقطع الزمن لندرس الإستقرار والتحكم والتقدير.

عند النظر إلى مسائل التحكم والتقدير اللا مركزي للأنظمة المتبدلة ماركوفياً مع تفاعلات محدودة معيارياً، فإنا ندرس معياري أداء: الأول هو تحقيق مستوى صد تشويش $\mathscr{H}_\infty$ أمثل، والثاني هو ضمان كلفة تربيعية متوسطة لأسوأ ظرف. سننظر في ثلاث مسائل رئيسة: توريد الحالة، توريد الخارج ديناميكياً والترشيح. في جميع الحالات فإن نقدم شروطاً لازمة وكافية لبناء المتحكمات/المرشحات والتي تأخذ شكل متراجحات مصفوفية خطية بالإضافة إلى قيود رتبة للمسألتين الأخريين. كذلك فإن نقدم طرقاً لبناء المتحكمات/المرشحات المعتمدة على النسق محلياً، حيث أنها أكثر تطبيقية.

في كل الحالات، نقدم أمثلة محاكاة لتطبيق النظريات المطورة لنظام تحكم شبكي لا مركزي مع فقدان الحزم ونجري مقارنة بين استراتيجيتي قبض الحزمة وتصفيرها في حالة توريد الخارج. وكذلك سندرس أثر احتمال فقدان الحزمة على أداء التحكم/الترشيح.

في فصل لاحق، ندرس استقرار خوارزمية تقدير متوزع متداخل مطروحة حديثاً مع فقدان حزم ماركوفي حيث نقدم شروطاً على شكل متراجحات مصفوفية خطية لعدد من مفاهيم الإستقرار.

أخيراً ولإيضاح مدى تطبيقية النتائج، نقوم بتطبيق متحكم $\mathscr{H}_\infty$ المورد للحالة اللا مركزي لعملية تسيير ديناميكية مع تكوين متبدل في شبكة معلومات، حيث تتواجد هذه المسألة مثلاً في الشبكات المتحركة العشوائية (MANETs). سنقوم بتعديل النظريات السابقة بحيث تتقبل تأخيرات زمنية ترابطية محدودة اعتباطياً بحيث نقدم خوارزمية تصميم بواسطة متراجحات مصفوفية خطية. نقدم كذلك مثال محاكاة لتوضيح النتائج.

أدوات التحكم النظرية المستخدم في الأطروحة تشمل البرمجة النصف محددة، الأنظمة المتبدلة ماركوفياً، المبرهنة الحقيقية المحدودة، تحكم $\mathscr{H}_\infty$ ، الإستقرار التربيعي وطريقة $S$.

**الكلمات المفتاحية:** التحكم اللا مركزي، فقدان الحزم، التحكم الشبكي، تحكم $\mathscr{H}_\infty$ ، الأنظمة المتبدلة ماركوفياً، التحكم المحكم.

**12 كانون الثاني 2011**