DAIKIN

technical data

air conditioning systems

MXS-E

Multi Split Heat Pump (edited)

Split Sky Air

1 Features

- Outdoor units for Multi model application.
- Up to 5 indoor units can be connected to 1 Multi outdoor unit. All indoor units are individually controllable with remote control and do not need to be installed in the same room or at the same time. They operate simultaneously within the same cooling operation
- It is possible to combine different types of indoor units as well. (e.g. wall mounted, ceiling mounted cassette corner, concealed ceiling unit)
- Daikin outdoor units are neat and sturdy and can be mounted easily on a roof or terrace or simply placed against an outside wall.
- Outdoor units are fitted with a swing compressor, renowned for its low noise and high energy efficiency

2 Specifications

2-1 TECHNICAL SPECIFICATIONS				2MXS40DAVMB	2MXS52E2V1B	3MXS52E2V1B	4MXS68E2V1B	4MXS80E7V3B	5MXS90E7V3B
Casing	Colour			Ivory White					
Dimensions	Unit	Height	mm	640	735	735	735	770	770
		Width	mm	685	936	936	936	900	900
		Depth	mm	285	300	300	300	320	320
	Packing	Height	mm	676	797	797	784	900	900
		Width	mm	800	992	992	992	925	925
		Depth	mm	366	390	390	390	390	390
Weight	Unit		kg	39	49	49	59	72	73
	Packed Unit		kg	42	56	56	65	80	80
Heat Exchanger	Dimensions	Length	mm	678	845	845	845	860	860
		Nr of Rows		1	2	2	2	2	2
		Fin Pitch	mm	1.4	1.80	1.80	1.60	1.40	1.40
		Nr of Stages		28	32	32	32	34	34
	Tube type			Hi-Xa(8)	ø7.94 grooved tubes 24	ø7.94 grooved tubes 24	Hi-Xa(8)	Hi-XSS(8)	Hi-XSS(8)
	Fin	Type		WF fin	Colgate fin	Colgate fin	WF fin	WF fin	WF fin
		Treatment		Anti-corrosion treatment (PE)	Anti-corrosion treatment (PE)	Anti-corrosion treatment (PE)	Anti-corrosion treatment (PE)		
Fan	Type			Propeller					
	Quantity			1	1	1	1	1	1
	Air Flow Rate (nominal at 230V)	Cooling	m³/min	35	45.0	45.0	51.0	54.5	54.5
		Heating	m³/min	32	45.0	45.0	47.6	46.0	
	Motor	Quantity		1	1	1	1	1	1
		Model		D50E-28	KFD-380-50-8A	KFD-380-50-8A	KFD-380-53-8C	KFD-280-66-8A	KFD-280-66-8A
Motor	Speed (nominal)	Cooling	rpm	880	720	720	790		860
		Heating	rpm	880		720	790		
Fan	Motor	Output	W	50	53	53	53	66	66
Compressor	Quantity				1	1	1	1	1
	Motor	Model		1YC23GXD	2YC36BXD	2YC36BXD	2YC45BXD	2YC63BXD#C	2YC63BXD#C
		Type		Hermetically sealed swing compressor					
		Motor Output	W	600	1100	1100	1380	1920	1920
Operation Range	Cooling	Min	°CDB	10	-10.0	-10.0	-10.0	-10.0	-10.0
		Max	°CDB	46	46.0	46.0	46.0	46.0	46.0
	Heating	Min	°CWB	-10	-15	-15	-15	-15	-15
		Max	°CWB	15.5	15.5	15.5	15.5	15.5	15.5
Sound Level (nominal)	Cooling	Sound Power	dBA	62	59.0	59.0	61.0	62.0	66.0
		Sound Pressure	dBA	47	46.0	46.0	48.0	48.0	52.0
	Heating	Sound Pressure	dBA	48	47.0	47.0	49.0	49.0	52.0
Sound Level (Night quiet)	Sound Pressure		dBA	43					
Refrigerant	Type			R-410A					
	Charge		kg	1.20	2.0	2.0	2.6	3.0	3.0
Refrigerant Oil	Type			FVC50K					
	Charged Volume		l	0.40	0.65	0.65	0.75	0.75	0.75

2 Specifications

2-1 TECHNICAL SPECIFICATIONS				2MXS40DAVMB	2MXS52E2V1B	3MXS52E2V1B	4MXS68E2V1B	4MXS80E7V3B	5MXS90E7V3B
Piping connections	Liquid (OD)	Quantity		2	2	3	4	4	5
		Diameter (OD)	mm	6.35	6.35	6.35	6.35	6.35	6.35
	Gas	Quantity		2	2	2	2	1	2
		Diameter (OD)	mm	9.5	12.7	9.5	9.5	9.5	9.5
		Quantity				1	2	1	1
		Diameter (OD)	mm			12.7	12.7	12.7	12.7
		Quantity						2	2
		Diameter (OD)	mm					15.9	15.9
	Drain	Quantity		1					
		Diameter (OD)	mm	18	18	18	18	25	25
	Piping Length	Minimum	m	1.5 (for one room)					
		Maximum	m	30 (for total of each room) , 20 (for one room)	50 (for total of each room)/25 (for one room)	50 (for total of each room) / 25 (for one room)	60 (for total of each room)/ 25 (for one room)	70 (for total of each room)/ 25 (for one room)	75 (for total of each room)/ 25 (for one room)
	Additional Refrigerant Charge		kg/m	0.02/>20	0.02/>30m	0.02/>30m	0.02/>30m	0.02/>30m	0.02/>30m
	Installation height difference	Maximum	m	15(between indoor unit and outdoor unit)	15.0 (between indoor unit and outdoor unit)	15.0 (between indoor unit and outdoor unit)	15.0 (between indoor unit and outdoor unit)	15.0 (between indoor unit and outdoor unit)	15.0 (between indoor unit and outdoor unit)
	Max. interunit level difference		m	7.5 (between indoor units)	7.5 (between indoor units)	7.5 (between indoor units)	7.5 (between indoor units)	7.5 (between indoor units)	7.5 (between indoor units)
	Heat Insulation			Both liquid and gas pipes					
Standard Accessories	Item			Installation manual					
	Quantity			1 pc	1	1	1	1	1
	Item			Screw bag	Drain plug	Drain plug	Drain plug	Drain plug	Drain plug
	Quantity			1 pc	1	1	1	1	1
	Item				Reducer assembly	Reducer assembly	Reducer assembly	Reducer assembly	Reducer assembly
	Quantity				1	1	1	1	1
Notes				Nominal cooling capacities are based on : indoor temperature : 270CDB, 190CWB, outdoor temperature : 350CDB, equivalent refrigerant piping : 7.5m, level difference : 0m.					
				Nominal heating capacities are based on : indoor temperature : 200CDB, outdoor temperature : 70CDB, 60CWB, equivalent refrigerant piping : 7.5m, level difference : 0m					
				Sound levels are measured in an anechoic room					
				Sound pressure level is a relative value, depending on the distance and acoustic environment. For more details, please refer to sound level drawings of this chapter.					
				The sound power level is an absolute value indicating the power which a sound source generates.					

2-2 ELECTRICAL SPECIFICATIONS				2MXS40DAVMB	2MXS52E2V1B	3MXS52E2V1B	4MXS68E2V1B	4MXS80E7V3B	5MXS90E7V3B
Power Supply	Name			VM	V1	V1	V1	V3	V3
	Phase			1	1	1	1	1	1
	Frequency		Hz	50/60	50	50	50	50	50
	Voltage		V	220-240/220-230	230	230	230	230	230
	Voltage range	Minimum	V		-10%	-10%	-10%	-10%	-10%
		Maximum	V		+10%	+10%	+10%	+10%	+10%
Current	Nominal running current (RLA)	Cooling (A)	A		0.33	0.33	0.33	0.97	0.97
		Heating (A)	A		0.33	0.33	0.33	0.69	
	Starting current (cooling/ heating)		A	6.2	6.7	6.2	8.5	9.7	11.8
	Z-max	List		No requirements					

2 Specifications

2-2 ELECTRICAL SPECIFICATIONS			2MXS40DAVMB	2MXS52E2V1B	3MXS52E2V1B	4MXS68E2V1B	4MXS80E7V3B	5MXS90E7V3B
Wiring connections	For Power Supply	Quantity	3	3	3	3	3	4
	For connection with indoor	Quantity	4	4	4	4	4	5
Power Supply Intake			Outdoor unit only					

3 Electrical data

Cooling (50Hz 230V)

Combination	Units				Power supply		Comp.	OFM		IFM	
	Hz	Volts	Min.	Max.	MCA	MFA	RLA	W	FLA	W	FLA
2.0	50	230	207	253	3.4	12	2.3	50	0.40	40	0.17
2.5					4.7		3.0			40	0.17
3.5					6.5		4.6			40	0.17
2.0+2.0					6.7		4.9			80	0.34
2.0+2.5					6.7		5.0			80	0.34
2.0+3.5					6.8		5.0			80	0.34
2.5+2.5					6.8		5.0			80	0.34
2.5+3.5					6.8		5.0			80	0.34

Heating (50Hz 230V)

Combination	Units				Power supply		Comp.	OFM		IFM	
	Hz	Volts	Min.	Max.	MCA	MFA	RLA	W	FLA	W	FLA
2.0	50	230	207	253	6.2	12	4.1	50	0.40	40	0.17
2.5					7.5		4.7			40	0.17
3.5					8.6		5.7			40	0.17
2.0+2.0					6.4		4.6			80	0.34
2.0+2.5					6.6		4.8			80	0.34
2.0+3.5					6.6		4.8			80	0.34
2.5+2.5					6.6		4.8			80	0.34
2.5+3.5					6.6		4.8			80	0.34

SYMBOLS

MCA : Min. Circuit Amps (A)
MFA : Max. Fuse Amps (A)
RLA : Rated Load Amps (A)
OFM : Outdoor Fan Motor
IFM : Indoor Fan Motor
FLA : Full Load Amps (A)
W : Fan Motor Rated Output (W)

NOTES

1. RLA is based on the following conditions:
   Power supply: 50Hz 240V
   Cooling
   Indoor temp.: 27°CDB/19.0°CWB
   Outdoor temp. : 35°CDB
   Heating
   Indoor temp.: 20°CDB
   Outdoor temp.: 7°CDB/6°CWB
2. Maximum allowable voltage unbalance between phases is 2%
3. Select wire size based on the larger value of MCA.
4. Instead of fuse, use circuit breaker
5. For more details concerning conditional connections, see http://eu.extranet.daikineurope.com, select "E-Data Books". Finally, click on the document title of your choice.

3 Electrical data

3MXS52E

Model		Units				Power supply		Comp.		OFM	
Outdoor	H/P C/D	Hz	Volts	Min.	Max.	MCA	MFA	MSC	RLA	W	FLA
3MXS52E2V1B 3AMX52E2V1B	H/P	50	220	198	242	18.5	20	6.2	5.6	44	0.30
			230	207	253			6.2	5.6		
			240	216	264			6.2	5.6		
2MXS52E2V1B 2AMX52E2V1B	H/P	50	220	198	242	18.5	20	6.7	6.1	44	0.30
			230	207	253			6.7	6.1		
			240	216	264			6.7	6.1		

3D052807

SYMBOLS

MCA : Min. Circuit Amps (A)
MFA : Max. Fuse Amps (See note 6). (A)
MSC : MSC means the max. current during the starting of compressor. (A)
RLA : Rated Load Amps (A)
OFM : Outdoor Fan Motor
IFM : Indoor Fan Motor
FLA : Full Load Amps (A)
W : Fan Motor Rated Output (W)

NOTES

1. RLA is based on the following conditions:
   Cooling
   Indoor temp.: 27°CDB/19.0°CWB
   Outdoor temp. : 35°CDB
2. Voltage range
   Units are suitable for use on electrical systems where voltage supplied to unit terminals is not below or above listed operation range limits
3. Maximum allowable voltage variation between phases is 2%
4. MCA represents maximum input current.
   MFA represents capacity which may accept MCA
5. Select wire size based on the larger value of MCA.
6. MFA is used to select the circuit breaker and the ground fault circuit interrupter (earth leakage circuit breaker)
7. For more details concerning conditional connections, see http://extranet.daikineurope.com, select "E-Data Books". Finally, click on the document title of your choice.

3 Electrical data

4MXS68E

Cooling (50Hz 230V)

Combination	Units				Power supply		Comp.	OFM		IFM	
	Hz	Volts	Min.	Max.	MCA	MFA	RLA	W	FLA	W	FLA
2.0	50	230	207	253	3.3	20	2.0	68	0.41	40	0.23
2.5					4.3		2.7			40	0.23
3.5					6.7		4.3			40	0.23
5.0					9.7		7.0			40	0.23
6.0					10.7		9.3			45	0.25
2.0+2.0					7.5		4.5			80	0.45
2.0+2.5					8.3		5.5			80	0.45
2.0+3.5					11.1		7.9			80	0.45
2.0+5.0					11.6		10.5			80	0.45
2.0+6.0					12.9		10.1			85	0.48
2.5+2.5					10.3		7.3			80	0.45
2.5+3.5					12.3		10.6			80	0.45
2.5+5.0					12.1		10.5			80	0.45
2.5+6.0					13.1		10.1			85	0.48
3.5+3.5					13.2		12.1			80	0.45
3.5+5.0					13.3		10.5			80	0.45
3.5+6.0					14.4		10.1			85	0.48
5.0+5.0					13.7		9.4			80	0.45
5.0+6.0					14.4		9.1			85	0.48
2.0+2.0+2.0					9.0		7.3			120	0.68
2.0+2.0+2.5					10.3		8.7			120	0.68
2.0+2.0+3.5					11.2		9.4			120	0.68
2.0+2.0+5.0					12.5		8.8			120	0.68
2.0+2.0+6.0					13.1		8.5			125	0.70
2.0+2.5+2.5					10.8		9.4			120	0.68
2.0+2.5+3.5					12.4		9.6			120	0.68
2.0+2.5+5.0					12.7		8.8			120	0.68
2.0+2.5+6.0					14.1		8.5			125	0.70
2.0+3.5+3.5					13.9		9.6			120	0.68
2.0+3.5+5.0					14.5		8.8			120	0.68
2.5+2.5+2.5					11.9		9.3			120	0.68
2.5+2.5+3.5					13.3		9.6			120	0.68
2.5+2.5+5.0					14.0		8.8			120	0.68
2.5+2.5+6.0					14.9		8.5			125	0.70
2.5+3.5+3.5					14.8		9.6			120	0.68
2.5+3.5+5.0					15.0		8.8			120	0.68
3.5+3.5+3.5					15.7		9.3			120	0.68

3D050192-5B

SYMBOLS

MCA : Min. Circuit Amps (A)
MFA : Max. Fuse Amps (A)
RLA : Rated Load Amps (A)
OFM : Outdoor Fan Motor
IFM : Indoor Fan Motor
FLA : Full Load Amps (A)
W : Fan Motor Rated Output (W)

NOTES

1. RLA is based on the following conditions:
   Power supply: 50Hz 230V
   Cooling
   Indoor temp.: 27°CDB/19.5°CWB
   Outdoor temp. : 35°CDB
   Heating
   Indoor temp.: 20°CDB
   Outdoor temp.: 7°CDB/6°CWB
2. Maximum allowable voltage unbalance between phases is 2%
3. Select wire size based on the larger value of MCA.
4. Instead of fuse, use circuit breaker
5. The above is the value for connecting with the following indoor units.
   2.0, 2.5, 3.5kW class: wall mounted C series
   5.0, 6.0kW class: wall mounted B series
6. Be sure to install an earth leak detector. (One that can handle higher harmonics.)
   (This unit uses an inverter, which means that it must be used an earth leak detector capable handling high harmonics in order to prevent malfunctioning of the earth leak detector.)
7. For more details concerning conditional connections, see http://extranet.daikineurope.com, select "E-Data Books". Finally, click on the document title of your choice.

3 Electrical data

4MXS68E

Cooling (50Hz 230V)

Combination	Units				Power supply		Comp.	OFM		IFM	
	Hz	Volts	Min.	Max.	MCA	MFA	RLA	W	FLA	W	FLA
2.0+2.0+2.0+2.0	50	230	207	253	10.8	20	8.4	68	0.41	160	0.90
2.0+2.0+2.0+2.5					11.3		8.4			160	0.90
2.0+2.0+2.0+3.5					12.7		8.4			160	0.90
2.0+2.0+2.0+5.0					13.6		7.8			160	0.90
2.0+2.0+2.5+2.5					12.0		8.4			160	0.90
2.0+2.0+2.5+3.5					13.2		8.4			160	0.90
2.0+2.0+3.5+3.5					14.3		8.4			160	0.90
2.0+2.5+2.5+2.5					12.7		8.4			160	0.90
2.0+2.5+2.5+3.5					13.8		8.4			160	0.90
2.5+2.5+2.5+2.5					13.5		8.4			160	0.90
2.5+2.5+2.5+3.5					14.8		8.4			160	0.90

3D050192-6B

SYMBOLS

MCA : Min. Circuit Amps (A)
MFA : Max. Fuse Amps (A)
RLA : Rated Load Amps (A)
OFM : Outdoor Fan Motor
IFM : Indoor Fan Motor
FLA : Full Load Amps (A)
W : Fan Motor Rated Output (W)

NOTES

1. RLA is based on the following conditions:
   Power supply: 50Hz 230V
   Cooling
   Indoor temp.: 27°CDB/19.5°CWB
   Outdoor temp. : 35°CDB
   Heating
   Indoor temp.: 20°CDB
   Outdoor temp.: 7°CDB/6°CWB
2. Maximum allowable voltage unbalance between phases is 2%
3. Select wire size based on the larger value of MCA.
4. Instead of fuse, use circuit breaker
5. The above is the value for connecting with the following indoor units.
   2.0, 2.5, 3.5kW class: wall mounted C series
   5.0, 6.0kW class: wall mounted B series
6. Be sure to install an earth leak detector. (One that can handle higher harmonics.)
   (This unit uses an inverter, which means that it must be used an earth leak detector capable handling high harmonics in order to prevent malfunctioning of the earth leak detector.)
7. For more details concerning conditional connections, see http://extranet.daikineurope.com, select "E-Data Books". Finally, click on the document title of your choice.

3 Electrical data

4MXS68E

Heating (50Hz 230V)

Combination	Units				Power supply		Comp.	OFM		IFM	
	Hz	Volts	Min.	Max.	MCA	MFA	RLA	W	FLA	W	FLA
2.0	50	230	207	253	5.8	20	3.2	68	0.41	40	0.23
2.5					6.3		4.6			40	0.23
3.5					7.2		6.4			40	0.23
5.0					12.3		10.5			40	0.23
6.0					12.3		10.9			45	0.25
2.0+2.0					10.1		7.8			80	0.45
2.0+2.5					10.6		8.6			80	0.45
2.0+3.5					11.9		9.7			80	0.45
2.0+5.0					13.3		10.4			80	0.45
2.0+6.0					13.1		9.8			85	0.48
2.5+2.5					11.2		9.3			80	0.45
2.5+3.5					12.6		10.9			80	0.45
2.5+5.0					13.5		10.4			80	0.45
2.5+6.0					13.4		9.8			85	0.48
3.5+3.5					13.9		12.6			80	0.45
3.5+5.0					13.9		10.4			80	0.45
3.5+6.0					13.2		9.6			85	0.48
5.0+5.0					12.8		9.5			80	0.45
5.0+6.0					12.4		9.1			85	0.48
2.0+2.0+2.0					12.3		8.4			120	0.68
2.0+2.0+2.5					12.5		8.9			120	0.68
2.0+2.0+3.5					12.7		9.5			120	0.68
2.0+2.0+5.0					11.9		9.0			120	0.68
2.0+2.0+6.0					11.8		8.5			125	0.70
2.0+2.5+2.5					12.5		9.5			120	0.68
2.0+2.5+3.5					12.7		9.5			120	0.68
2.0+2.5+5.0					12.3		9.0			120	0.68
2.0+2.5+6.0					11.9		8.5			125	0.70
2.0+3.5+3.5					12.9		9.5			120	0.68
2.0+3.5+5.0					12.5		9.0			120	0.68
2.5+2.5+2.5					12.7		9.5			120	0.68
2.5+2.5+3.5					13.1		9.5			120	0.68
2.5+2.5+5.0					12.3		9.0			120	0.68
2.5+2.5+6.0					11.9		8.5			125	0.70
2.5+3.5+3.5					13.0		9.3			120	0.68
2.5+3.5+5.0					12.3		8.8			120	0.68
3.5+3.5+3.5					13.7		9.6			120	0.68

3D050192-7B

SYMBOLS

MCA : Min. Circuit Amps (A)
MFA : Max. Fuse Amps (A)
RLA : Rated Load Amps (A)
OFM : Outdoor Fan Motor
IFM : Indoor Fan Motor
FLA : Full Load Amps (A)
W : Fan Motor Rated Output (W)

NOTES

1. RLA is based on the following conditions:
   Power supply: 50Hz 230V
   Cooling
   Indoor temp.: 27°CDB/19.5°CWB
   Outdoor temp. : 35°CDB
   Heating
   Indoor temp.: 20°CDB
   Outdoor temp.: 7°CDB/6°CWB
2. Maximum allowable voltage unbalance between phases is 2%
3. Select wire size based on the larger value of MCA.
4. Instead of fuse, use circuit breaker
5. The above is the value for connecting with the following indoor units.
   2.0, 2.5, 3.5kW class: wall mounted C series
   5.0, 6.0kW class: wall mounted B series
6. Be sure to install an earth leak detector. (One that can handle higher harmonics.)
   (This unit uses an inverter, which means that it must be used an earth leak detector capable handling high harmonics in order to prevent malfunctioning of the earth leak detector.)
7. For more details concerning conditional connections, see http://extranet.daikineurope.com, select "E-Data Books". Finally, click on the document title of your choice.

3 Electrical data

4MXS68E

Heating (50Hz 230V)

Combination	Units				Power supply		Comp.	OFM		IFM	
	Hz	Volts	Min.	Max.	MCA	MFA	RLA	W	FLA	W	FLA
2.0+2.0+2.0+2.0	50	230	207	253	11.5	20	8.6	68	0.41	160	0.90
2.0+2.0+2.0+2.5					11.7		8.5			160	0.90
2.0+2.0+2.0+3.5					11.9		8.5			160	0.90
2.0+2.0+2.0+5.0					11.6		8.0			160	0.90
2.0+2.0+2.5+2.5					11.7		8.5			160	0.90
2.0+2.0+2.5+3.5					11.9		8.5			160	0.90
2.0+2.0+3.5+3.5					12.1		8.4			160	0.90
2.0+2.5+2.5+2.5					11.7		8.5			160	0.90
2.0+2.5+2.5+3.5					12.0		8.4			160	0.90
2.5+2.5+2.5+2.5					11.8		8.5			160	0.90
2.5+2.5+2.5+3.5					11.9		8.4			160	0.90

3D050192-8B

SYMBOLS

MCA : Min. Circuit Amps (A)
MFA : Max. Fuse Amps (A)
RLA : Rated Load Amps (A)
OFM : Outdoor Fan Motor
IFM : Indoor Fan Motor
FLA : Full Load Amps (A)
W : Fan Motor Rated Output (W)

NOTES

1. RLA is based on the following conditions:
   Power supply: 50Hz 230V
   Cooling
   Indoor temp.: 27°CDB/19.5°CWB
   Outdoor temp. : 35°CDB
   Heating
   Indoor temp.: 20°CDB
   Outdoor temp.: 7°CDB/6°CWB
2. Maximum allowable voltage unbalance between phases is 2%
3. Select wire size based on the larger value of MCA.
4. Instead of fuse, use circuit breaker
5. The above is the value for connecting with the following indoor units.
   2.0, 2.5, 3.5kW class: wall mounted C series
   5.0, 6.0kW class: wall mounted B series
6. Be sure to install an earth leak detector. (One that can handle higher harmonics.)
   (This unit uses an inverter, which means that it must be used an earth leak detector capable handling high harmonics in order to prevent malfunctioning of the earth leak detector.)
7. For more details concerning conditional connections, see http://extranet.daikineurope.com, select "E-Data Books". Finally, click on the document title of your choice.

3 Electrical data

4MXS68E

Cooling (50Hz 230V)

Combination	Units				Power supply		Comp.	OFM		IFM	
	Hz	Volts	Min.	Max.	MCA	MFA	RLA	W	FLA	W	FLA
2.0	50	230	207	253	3.1	20	1.9	68	0.41	40	0.17
2.5					4.2		2.6			40	0.17
3.5					6.5		4.1			40	0.17
5.0					9.8		8.1			40	0.17
6.0					10.7		9.3			45	0.25
2.0+2.0					7.2		4.5			80	0.34
2.0+2.5					8.0		5.4			80	0.34
2.0+3.5					10.8		7.7			80	0.34
2.0+5.0					12.5		11.4			80	0.34
2.0+6.0					12.5		10.1			85	0.42
2.5+2.5					10.0		7.2			80	0.34
2.5+3.5					11.9		10.3			80	0.34
2.5+5.0					13.0		11.4			80	0.34
2.5+6.0					12.7		10.1			85	0.42
3.5+3.5					12.8		11.8			80	0.34
3.5+5.0					14.3		11.3			80	0.34
3.5+6.0					14.0		10.0			85	0.42
5.0+5.0					14.7		10.6			80	0.34
5.0+6.0					15.5		9.8			85	0.42
2.0+2.0+2.0					8.7		7.2			120	0.51
2.0+2.0+2.5					10.0		8.6			120	0.51
2.0+2.0+3.5					11.1		9.5			120	0.51
2.0+2.0+5.0					13.4		9.4			120	0.51
2.0+2.0+6.0					12.7		8.4			125	0.59
2.0+2.5+2.5					10.7		9.5			120	0.51
2.0+2.5+3.5					12.0		9.4			120	0.51
2.0+2.5+5.0					13.7		9.4			120	0.51
2.0+2.5+6.0					13.7		8.3			125	0.59
2.0+3.5+3.5					13.4		9.4			120	0.51
2.0+3.5+5.0					15.6		9.3			120	0.51
2.5+2.5+2.5					11.6		9.4			120	0.51
2.5+2.5+3.5					12.9		9.4			120	0.51
2.5+2.5+5.0					15.1		9.3			120	0.51
2.5+2.5+6.0					14.4		8.3			125	0.59
2.5+3.5+3.5					14.4		9.4			120	0.51
2.5+3.5+5.0					16.2		9.2			120	0.51
3.5+3.5+3.5					15.2		9.3			120	0.51

3D050192-1B

SYMBOLS

MCA : Min. Circuit Amps (A)
MFA : Max. Fuse Amps (A)
RLA : Rated Load Amps (A)
OFM : Outdoor Fan Motor
IFM : Indoor Fan Motor
FLA : Full Load Amps (A)
W : Fan Motor Rated Output (W)

NOTES

1. RLA is based on the following conditions:
   Power supply: 50Hz 230V
   Cooling
   Indoor temp.: 27°CDB/19.5°CWB
   Outdoor temp. : 35°CDB
   Heating
   Indoor temp.: 20°CDB
   Outdoor temp.: 7°CDB/6°CWB
2. Maximum allowable voltage unbalance between phases is 2%
3. Select wire size based on the larger value of MCA.
4. Instead of fuse, use circuit breaker
5. The above is the value for connecting with the following indoor units.
   2.0, 2.5, 3.5, 5.0kW class: wall mounted D series
   6.0kW class: wall mounted B series
6. Be sure to install an earth leak detector. (One that can handle higher harmonics.)
   (This unit uses an inverter, which means that it must be used an earth leak detector capable handling high harmonics in order to prevent malfunctioning of the earth leak detector.)
7. For more details concerning conditional connections, see http://extranet.daikineurope.com, select "E-Data Books". Finally, click on the document title of your choice.

3 Electrical data

4MXS68E

Cooling (50Hz 230V)

Combination	Units				Power supply		Comp.	OFM		IFM	
	Hz	Volts	Min.	Max.	MCA	MFA	RLA	W	FLA	W	FLA
2.0+2.0+2.0+2.0	50	230	207	253	10.5	20	8.3	68	0.41	160	0.69
2.0+2.0+2.0+2.5					11.0		8.3			160	0.69
2.0+2.0+2.0+3.5					12.3		8.3			160	0.69
2.0+2.0+2.0+5.0					14.7		8.1			160	0.69
2.0+2.0+2.5+2.5					11.6		8.3			160	0.69
2.0+2.0+2.5+3.5					12.8		8.2			160	0.69
2.0+2.0+3.5+3.5					13.8		8.2			160	0.69
2.0+2.5+2.5+2.5					12.3		8.2			160	0.69
2.0+2.5+2.5+3.5					13.4		8.2			160	0.69
2.5+2.5+2.5+2.5					13.1		8.2			160	0.69
2.5+2.5+2.5+3.5					14.4		8.1			160	0.69

3D050192-2B

SYMBOLS

MCA : Min. Circuit Amps (A)
MFA : Max. Fuse Amps (A)
RLA : Rated Load Amps (A)
OFM : Outdoor Fan Motor
IFM : Indoor Fan Motor
FLA : Full Load Amps (A)
W : Fan Motor Rated Output (W)

NOTES

1. RLA is based on the following conditions:
   Power supply: 50Hz 230V
   Cooling
   Indoor temp.: 27°CDB/19.5°CWB
   Outdoor temp. : 35°CDB
   Heating
   Indoor temp.: 20°CDB
   Outdoor temp.: 7°CDB/6°CWB
2. Maximum allowable voltage unbalance between phases is 2%
3. Select wire size based on the larger value of MCA.
4. Instead of fuse, use circuit breaker
5. The above is the value for connecting with the following indoor units.
   2.0, 2.5, 3.5, 5.0kW class: wall mounted D series
   6.0kW class: wall mounted B series
6. Be sure to install an earth leak detector. (One that can handle higher harmonics.)
   (This unit uses an inverter, which means that it must be used an earth leak detector capable handling high harmonics in order to prevent malfunctioning of the earth leak detector.)
7. For more details concerning conditional connections, see http://extranet.daikineurope.com, select "E-Data Books". Finally, click on the document title of your choice.

3 Electrical data

4MXS68E

Heating (50Hz 230V)

Combination	Units				Power supply		Comp.	OFM		IFM	
	Hz	Volts	Min.	Max.	MCA	MFA	RLA	W	FLA	W	FLA
2.0					5.6		3.1			40	0.17
2.5					6.0		4.4			40	0.17
3.5					7.0		6.2			40	0.17
5.0					9.9		9.2			40	0.17
6.0					11.9		10.5			45	0.25
2.0+2.0					9.8		7.7			80	0.34
2.0+2.5					10.3		8.4			80	0.34
2.0+3.5					11.6		9.7			80	0.34
2.0+5.0					14.4		11.3			80	0.34
2.0+6.0					13.1		9.7			85	0.42
2.5+2.5					11.2		9.3			80	0.34
2.5+3.5					12.7		10.9			80	0.34
2.5+5.0					14.5		11.3			80	0.34
2.5+6.0					13.2		9.7			85	0.42
3.5+3.5					13.6		12.3			80	0.34
3.5+5.0					15.0		11.3			80	0.34
3.5+6.0					13.2		9.6			85	0.42
5.0+5.0					14.0		10.4			80	0.34
5.0+6.0	50	230	207	253	13.1	20	9.4	68	0.41	85	0.42
2.0+2.0+2.0					11.9		8.3			120	0.51
2.0+2.0+2.5					12.1		8.8			120	0.51
2.0+2.0+3.5					12.7		9.7			120	0.51
2.0+2.0+5.0					13.0		9.6			120	0.51
2.0+2.0+6.0					11.7		8.5			125	0.59
2.0+2.5+2.5					12.5		9.7			120	0.51
2.0+2.5+3.5					12.7		9.6			120	0.51
2.0+2.5+5.0					13.2		9.5			120	0.51
2.0+2.5+6.0					11.6		8.4			125	0.59
2.0+3.5+3.5					12.9		9.5			120	0.51
2.0+3.5+5.0					13.5		9.4			120	0.51
2.5+2.5+2.5					12.7		9.7			120	0.51
2.5+2.5+3.5					13.1		9.6			120	0.51
2.5+2.5+5.0					13.3		9.4			120	0.51
2.5+2.5+6.0					11.6		8.3			125	0.59
2.5+3.5+3.5					13.0		9.5			120	0.51
2.5+3.5+5.0					13.2		9.4			120	0.51
3.5+3.5+3.5					13.3		9.4			120	0.51

3D050192-3B

SYMBOLS

MCA : Min. Circuit Amps (A)
MFA : Max. Fuse Amps (A)
RLA : Rated Load Amps (A)
OFM : Outdoor Fan Motor
IFM : Indoor Fan Motor
FLA : Full Load Amps (A)
W : Fan Motor Rated Output (W)

NOTES

1. RLA is based on the following conditions:
   Power supply: 50Hz 230V
   Cooling
   Indoor temp.: 27°CDB/19.5°CWB
   Outdoor temp. : 35°CDB
   Heating
   Indoor temp.: 20°CDB
   Outdoor temp.: 7°CDB/6°CWB
2. Maximum allowable voltage unbalance between phases is 2%
3. Select wire size based on the larger value of MCA.
4. Instead of fuse, use circuit breaker
5. The above is the value for connecting with the following indoor units.
   2.0, 2.5, 3.5, 5.0kW class: wall mounted D series
   6.0kW class: wall mounted B series
6. Be sure to install an earth leak detector. (One that can handle higher harmonics.)
   (This unit uses an inverter, which means that it must be used an earth leak detector capable handling high harmonics in order to prevent malfunctioning of the earth leak detector.)
7. For more details concerning conditional connections, see http://extranet.daikineurope.com, select "E-Data Books". Finally, click on the document title of your choice.

3 Electrical data

4MXS68E

Heating (50Hz 230V)

Combination	Units				Power supply		Comp.	OFM		IFM	
	Hz	Volts	Min.	Max.	MCA	MFA	RLA	W	FLA	W	FLA
2.0+2.0+2.0+2.0	50	230	207	253	11.5	20	8.4	68	0.41	160	0.69
2.0+2.0+2.0+2.5					11.3		8.3			160	0.69
2.0+2.0+2.0+3.5					11.5		8.3			160	0.69
2.0+2.0+2.0+5.0					11.8		8.1			160	0.69
2.0+2.0+2.5+2.5					11.3		8.3			160	0.69
2.0+2.0+2.5+3.5					11.5		8.3			160	0.69
2.0+2.0+3.5+3.5					11.7		8.2			160	0.69
2.0+2.5+2.5+2.5					11.3		8.3			160	0.69
2.0+2.5+2.5+3.5					11.7		8.2			160	0.69
2.5+2.5+2.5+2.5					11.4		8.3			160	0.69
2.5+2.5+2.5+3.5					11.5		8.1			160	0.69

3D050192-4B

SYMBOLS

MCA : Min. Circuit Amps (A)
MFA : Max. Fuse Amps (A)
RLA : Rated Load Amps (A)
OFM : Outdoor Fan Motor
IFM : Indoor Fan Motor
FLA : Full Load Amps (A)
W : Fan Motor Rated Output (W)

NOTES

1. RLA is based on the following conditions:
   Power supply: 50Hz 230V
   Cooling
   Indoor temp.: 27°CDB/19.5°CWB
   Outdoor temp. : 35°CDB
   Heating
   Indoor temp.: 20°CDB
   Outdoor temp.: 7°CDB/6°CWB
2. Maximum allowable voltage unbalance between phases is 2%
3. Select wire size based on the larger value of MCA.
4. Instead of fuse, use circuit breaker
5. The above is the value for connecting with the following indoor units.
   2.0, 2.5, 3.5, 5.0kW class: wall mounted D series
   6.0kW class: wall mounted B series
6. Be sure to install an earth leak detector. (One that can handle higher harmonics.)
   (This unit uses an inverter, which means that it must be used an earth leak detector capable handling high harmonics in order to prevent malfunctioning of the earth leak detector.)
7. For more details concerning conditional connections, see http://extranet.daikineurope.com, select "E-Data Books". Finally, click on the document title of your choice.

3 Electrical data

4MXS80E, 5MXS90E

Model		Units				Power supply		Comp.		OFM	
Outdoor	H/P C/D	Hz	Volts	Min.	Max.	MCA	MFA	MSC	RLA	W	FLA
5MXS90E7V3B	H/P	50	230	207	253	18.5	20	11.8	9.94	95	1.02
4MXS80E7V3B	H/P	50	230	207	253	18.5	20	9.7	8.1	86	0.97

3D052365

SYMBOLS

MCA : Min. Circuit Amps (A)
MFA : Max. Fuse Amps (See note 6). (A)
MSC : MSC means the max. current during the starting of compressor. (A)
RLA : Rated Load Amps (A)
OFM : Outdoor Fan Motor
FLA : Full Load Amps (A)
W : Fan Motor Rated Output (W)

NOTES

1. RLA is based on the following conditions:
   Cooling
   Indoor temp.: 27°CDB/19.0°CWB
   Outdoor temp. : 35°CDB
2. Voltage range
   Units are suitable for use on electrical systems where voltage supplied to unit terminals is not below or above listed operation range limits
3. Maximum allowable voltage variation between phases is 2%
4. MCA represents maximum input current.
   MFA represents capacity which may accept MCA
5. Select wire size based on the larger value of MCA.
6. MFA is used to select the circuit breaker and the ground fault circuit interrupter (earth leakage circuit breaker)
7. For more details concerning conditional connections, see http://extranet.daikineurope.com, select "E-Data Books". Finally, click on the document title of your choice.

4 Options

4MXS, 5MXS

N°	Item	4MXS80E7	5MXS90E7	5MKS90E7
1	Drain plug	KKPJ5F180		

4TW27571-1

6 Dimensional drawing & centre of gravity

6 - 1 Dimensional drawing

2MXS40D unit (mm)

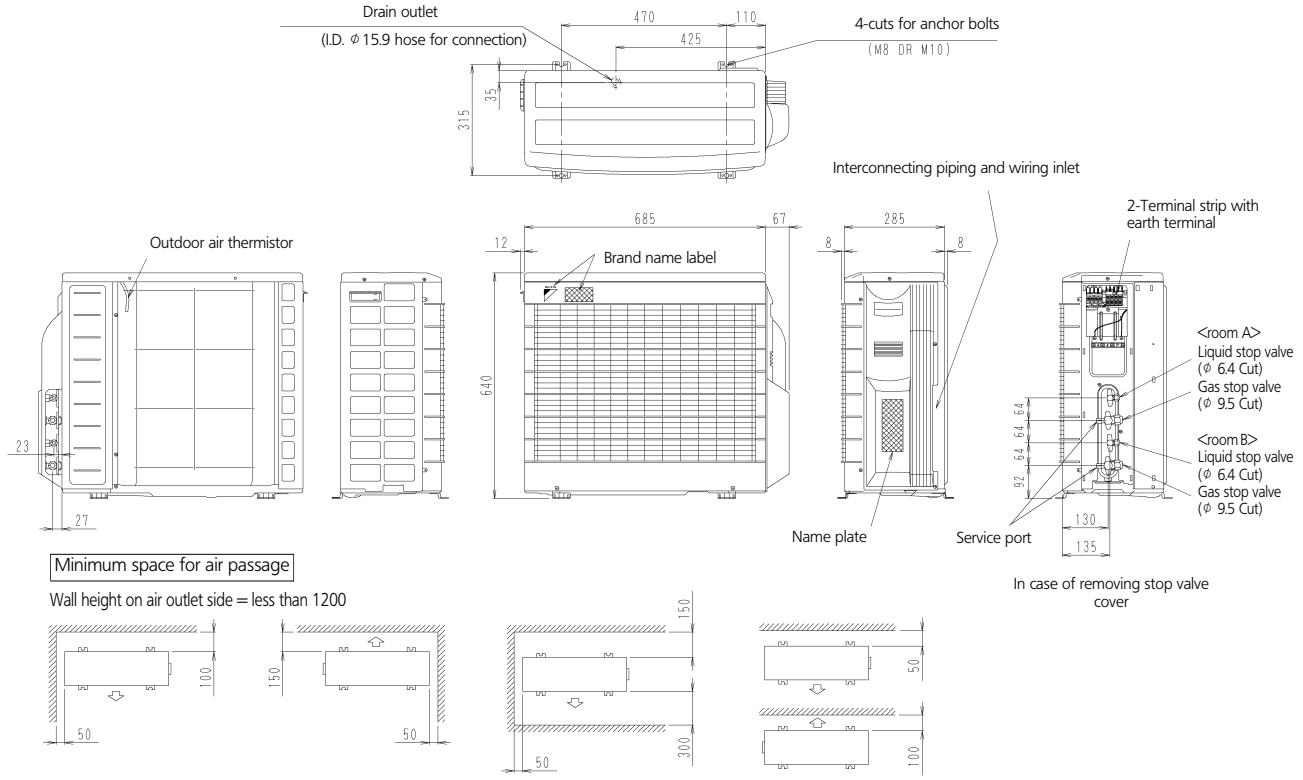

3D039391A

2MXS52E unit (mm)

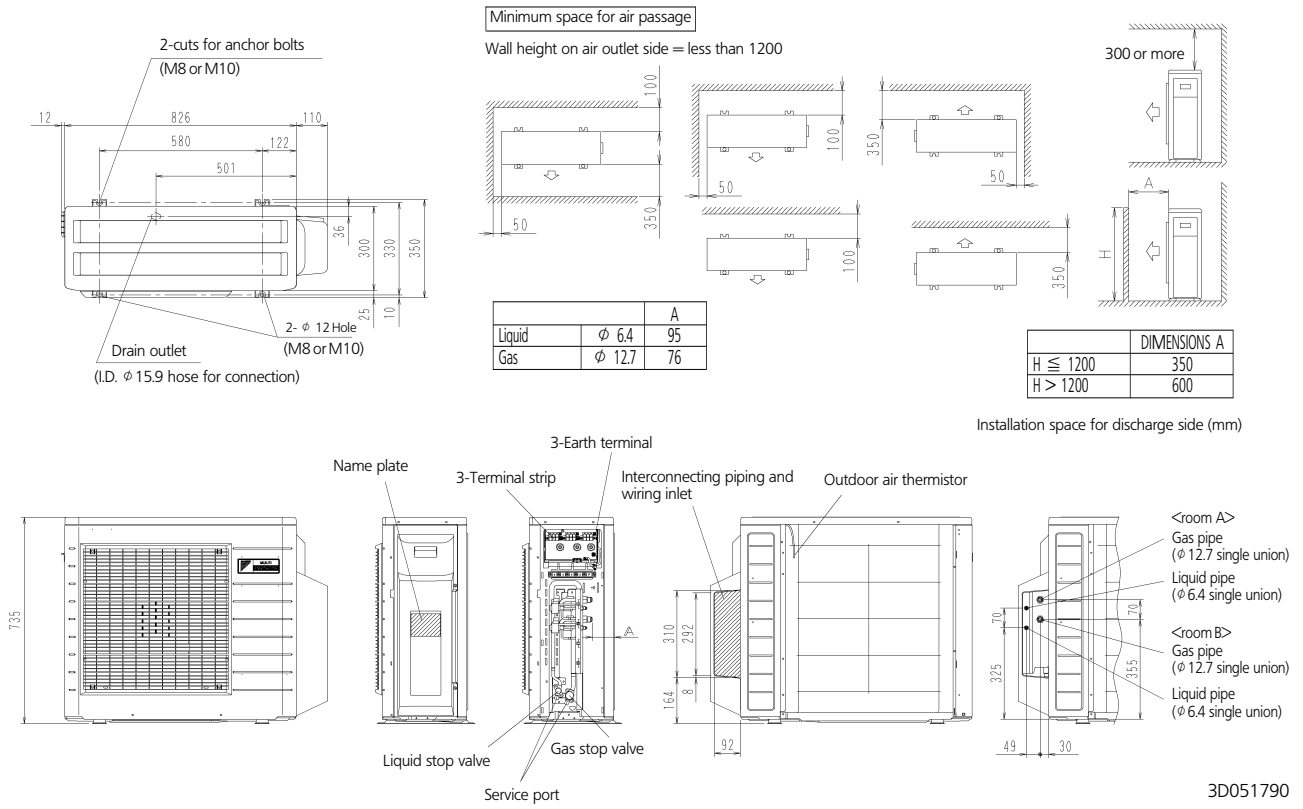

		A
Liquid	Φ 6.4	95
Gas	Φ 12.7	76

	DIMENSIONS A
H ≦ 1200	350
H > 1200	600

3D051790

6 Dimensional drawing & centre of gravity

6 - 1 Dimensional drawing

3MXS52E unit (mm)

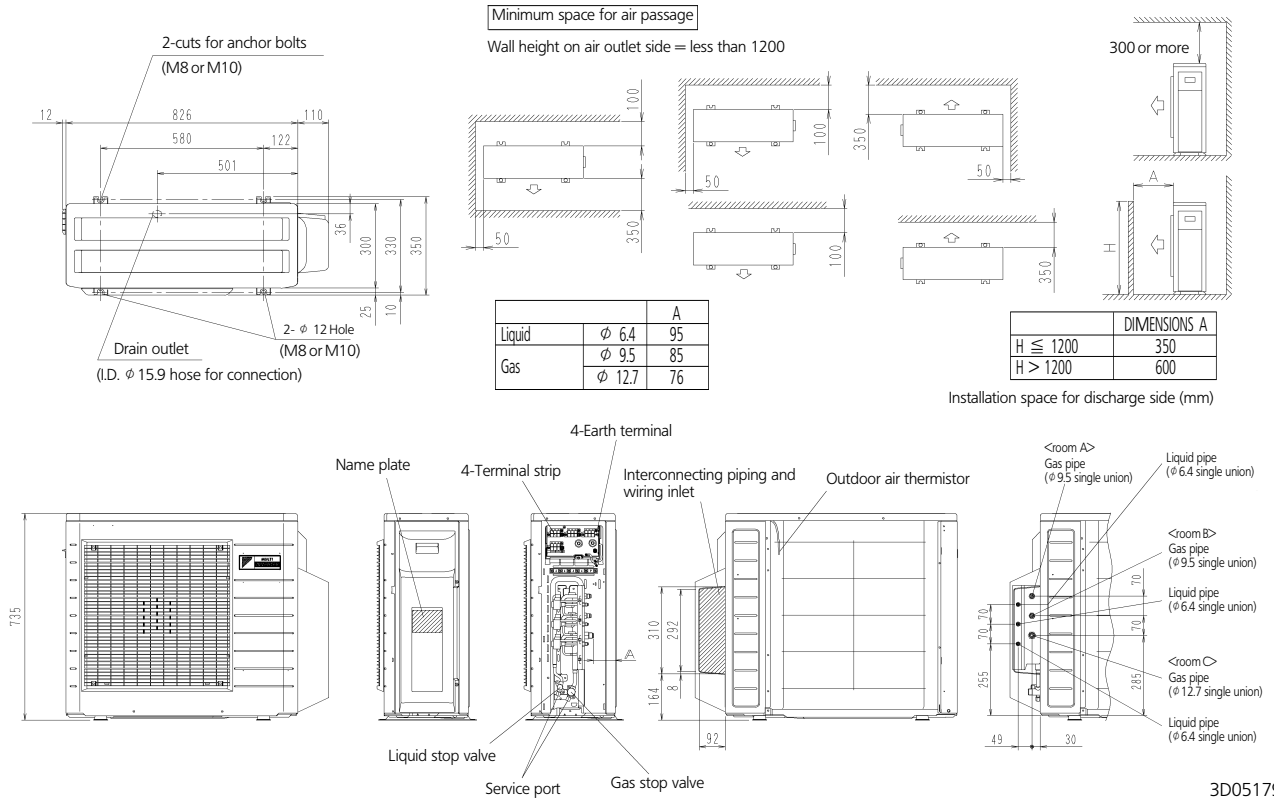

		A
Liquid	φ 6.4	95
Gas	φ 9.5	85
	φ 12.7	76

	DIMENSIONS A
H ≦ 1200	350
H > 1200	600

3D051791

4MXS68E unit (mm)

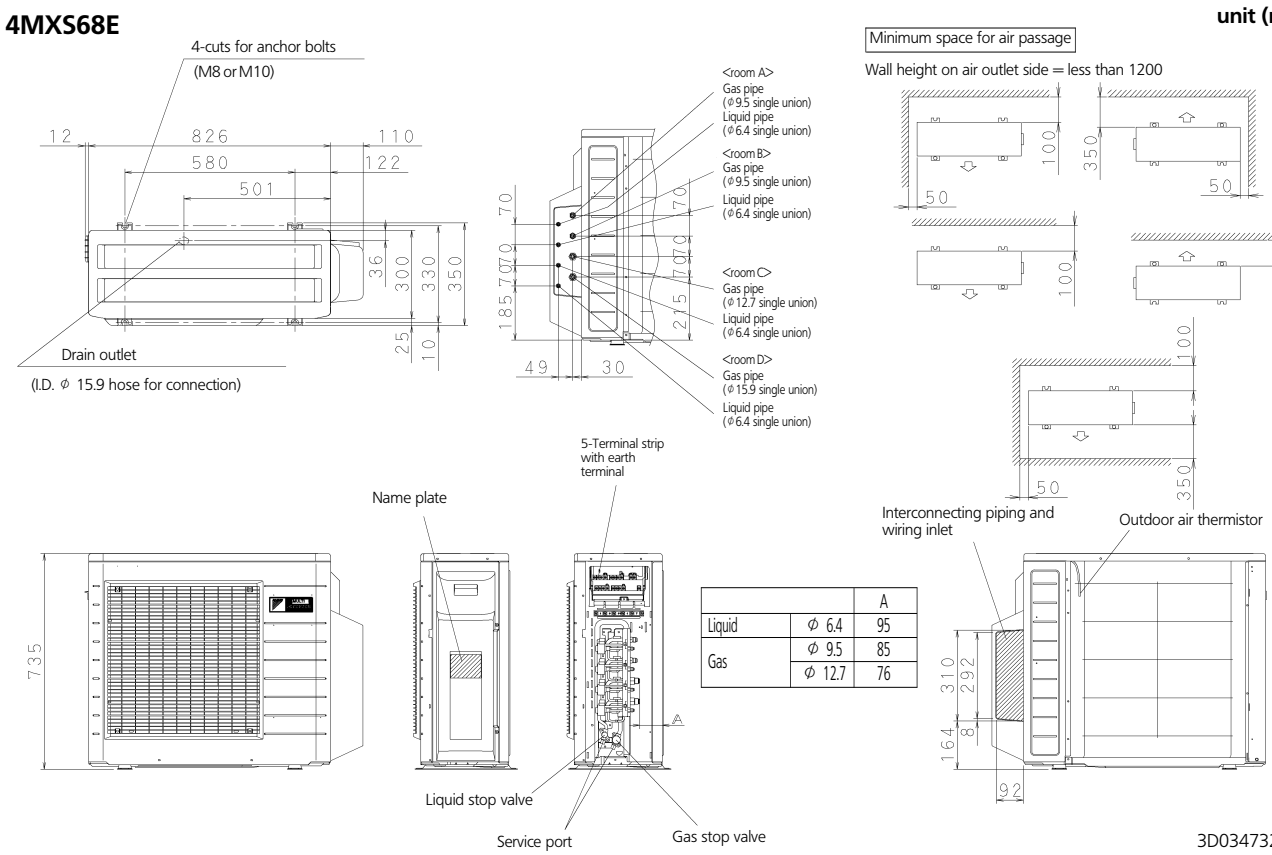

		A
Liquid	φ 6.4	95
Gas	φ 9.5	85
	φ 12.7	76

3D034732G

6 Dimensional drawing & centre of gravity

6 - 1 Dimensional drawing

4MXS80E unit (mm)

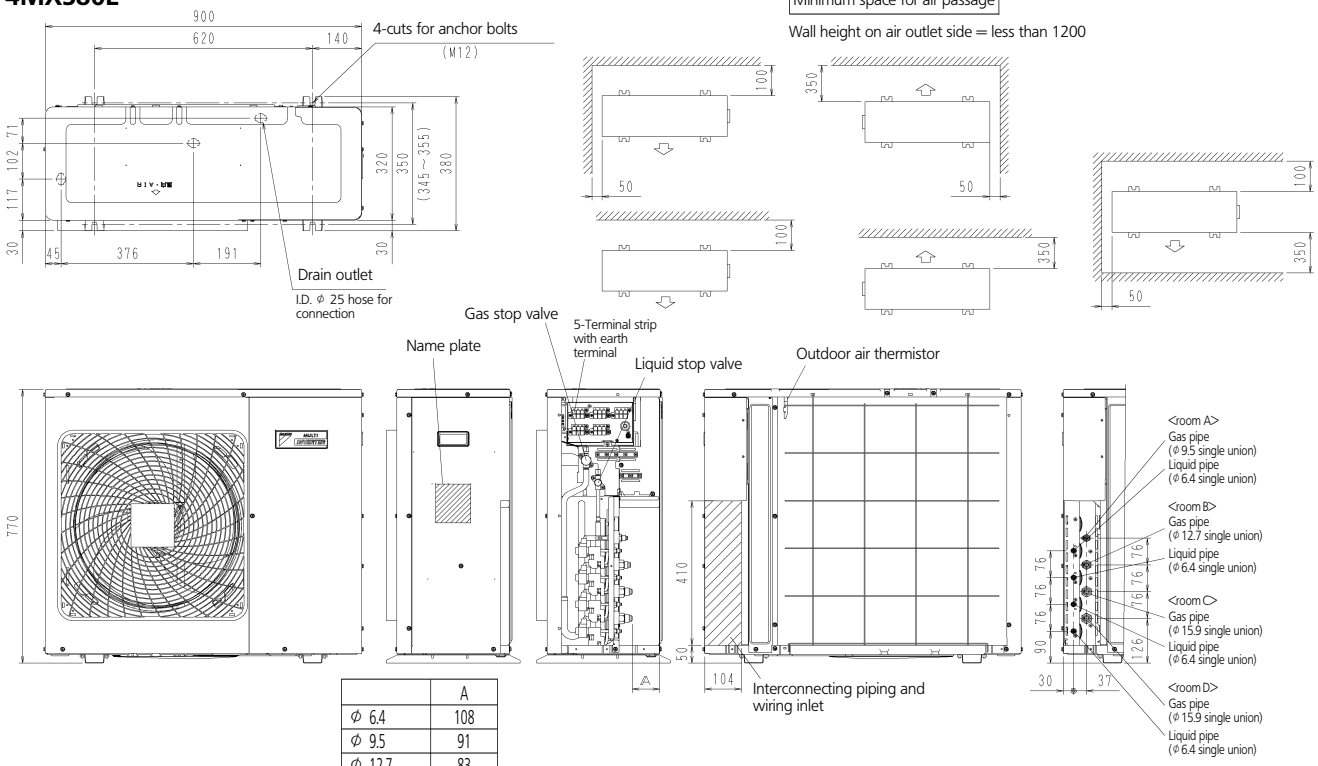

	A
φ 6.4	108
φ 9.5	91
φ 12.7	83
φ 15.9	78

3D051950

5MXS90E unit (mm)

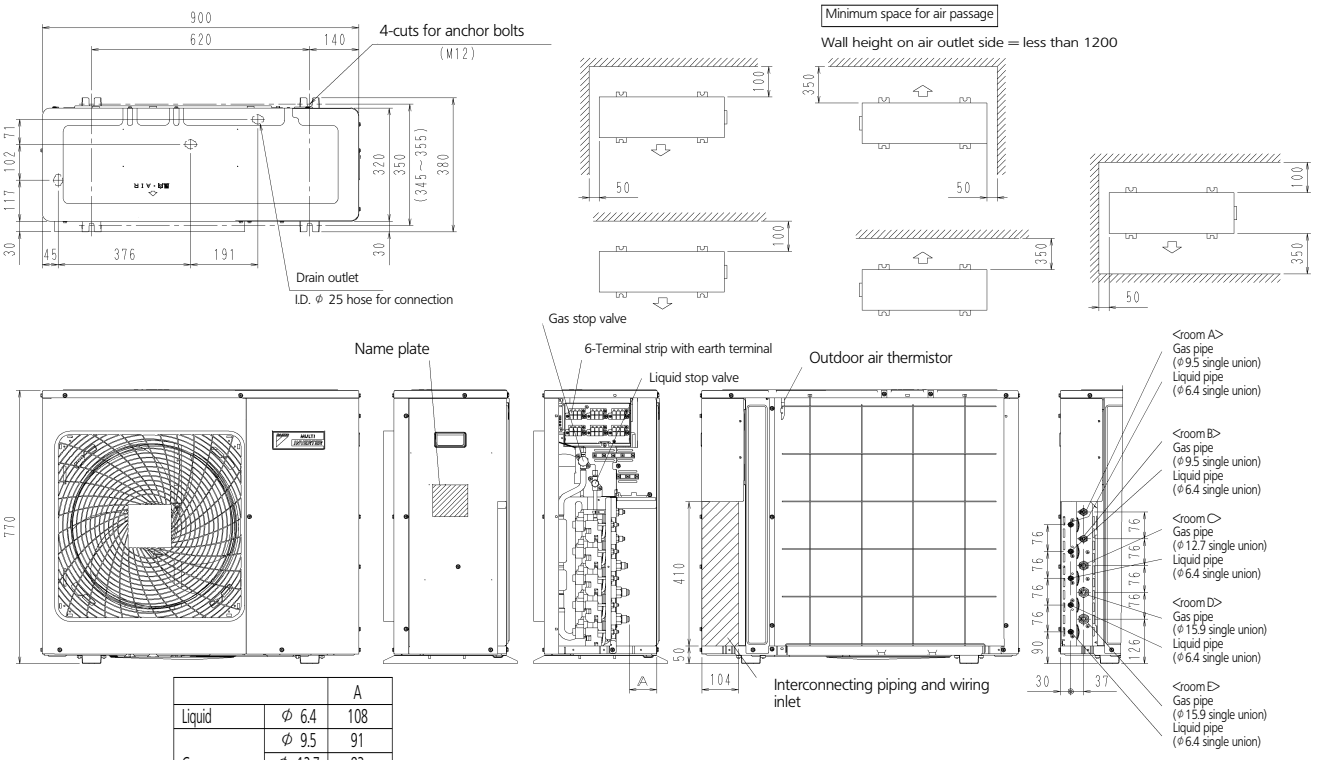

		A
Liquid	φ 6.4	108
Gas	φ 9.5	91
	φ 12.7	83
	φ 15.9	78

3D051948A

6 Dimensional drawing & centre of gravity

6 - 2 Centre of gravity

2MXS40D

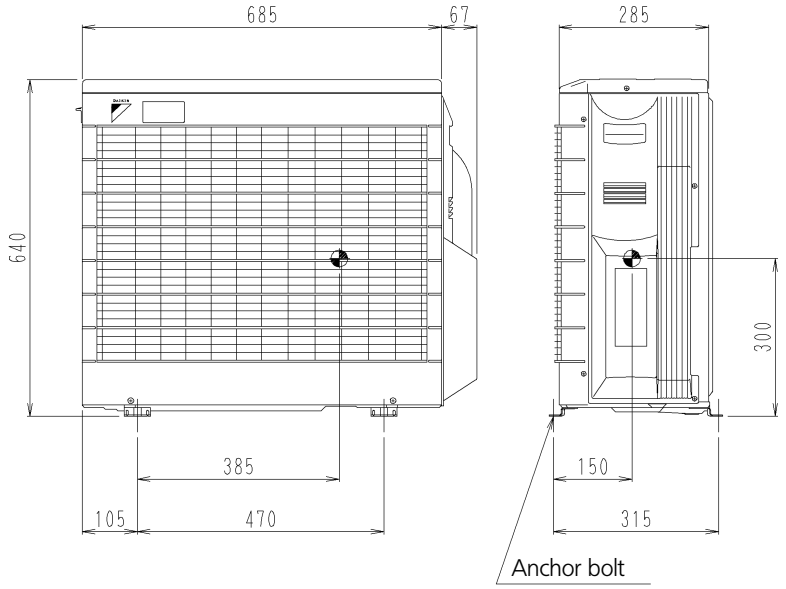

4D040369A

2MXS52E, 3MXS52E, 4MXS68E

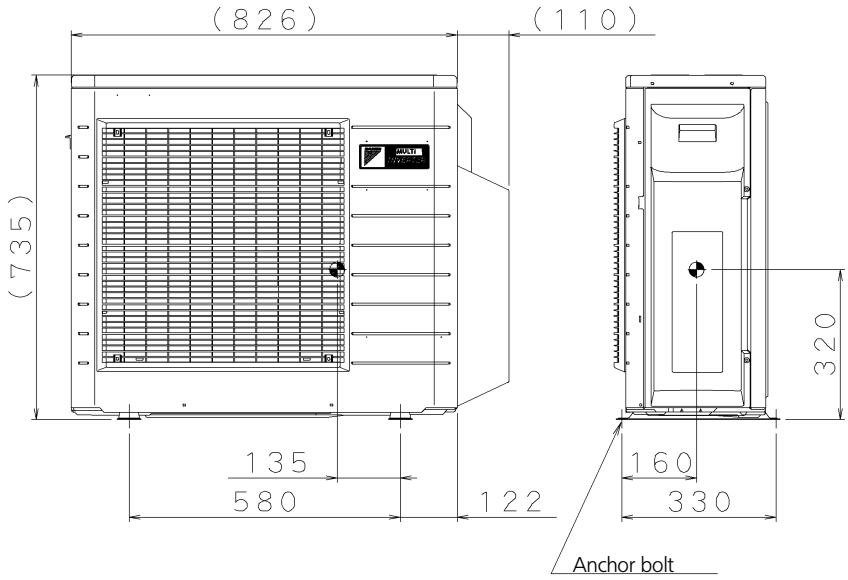

4D037024H

6 Dimensional drawing & centre of gravity

6 - 2 Centre of gravity

4MXS80E, 5MXS90E

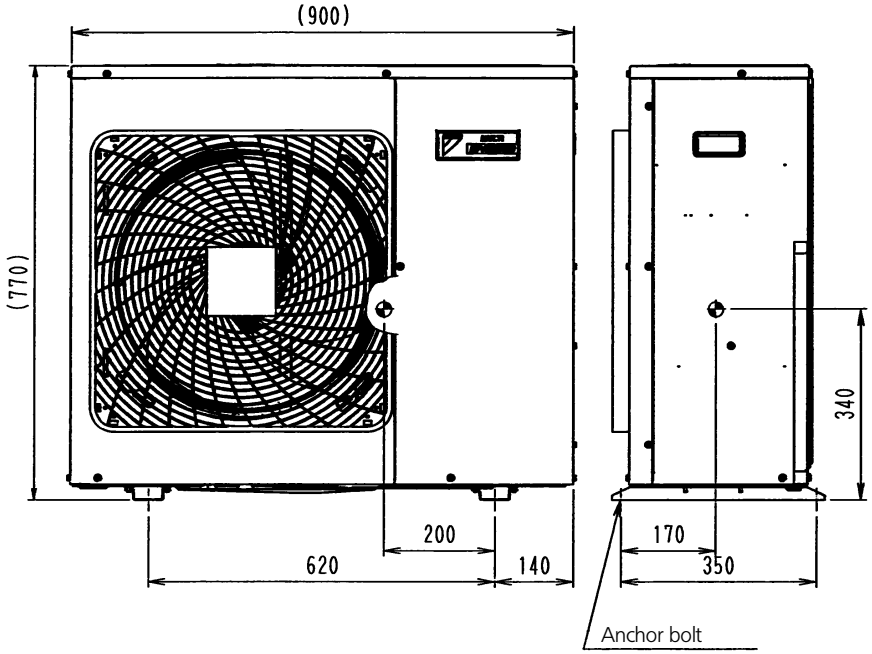

4D052059

7 Piping diagram

2MXS40D

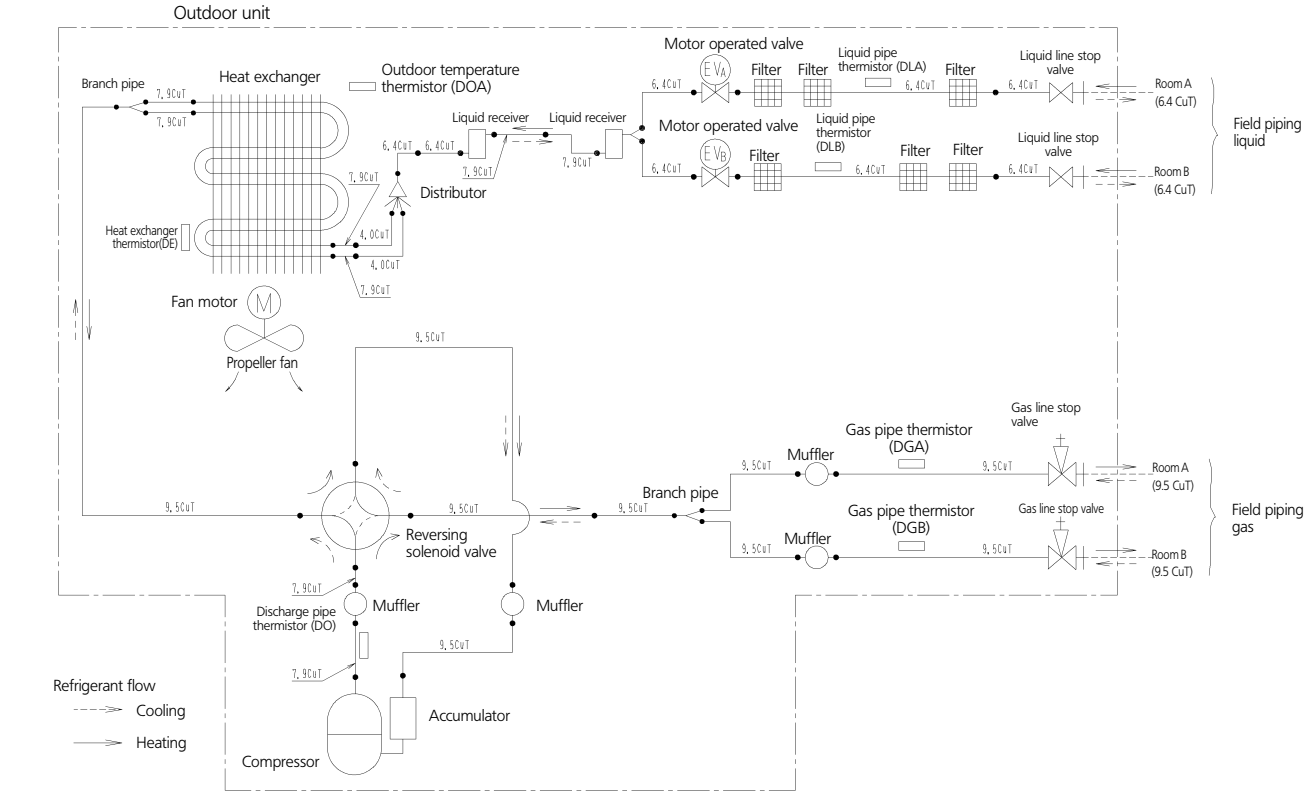

3D039392A

2MXS52E

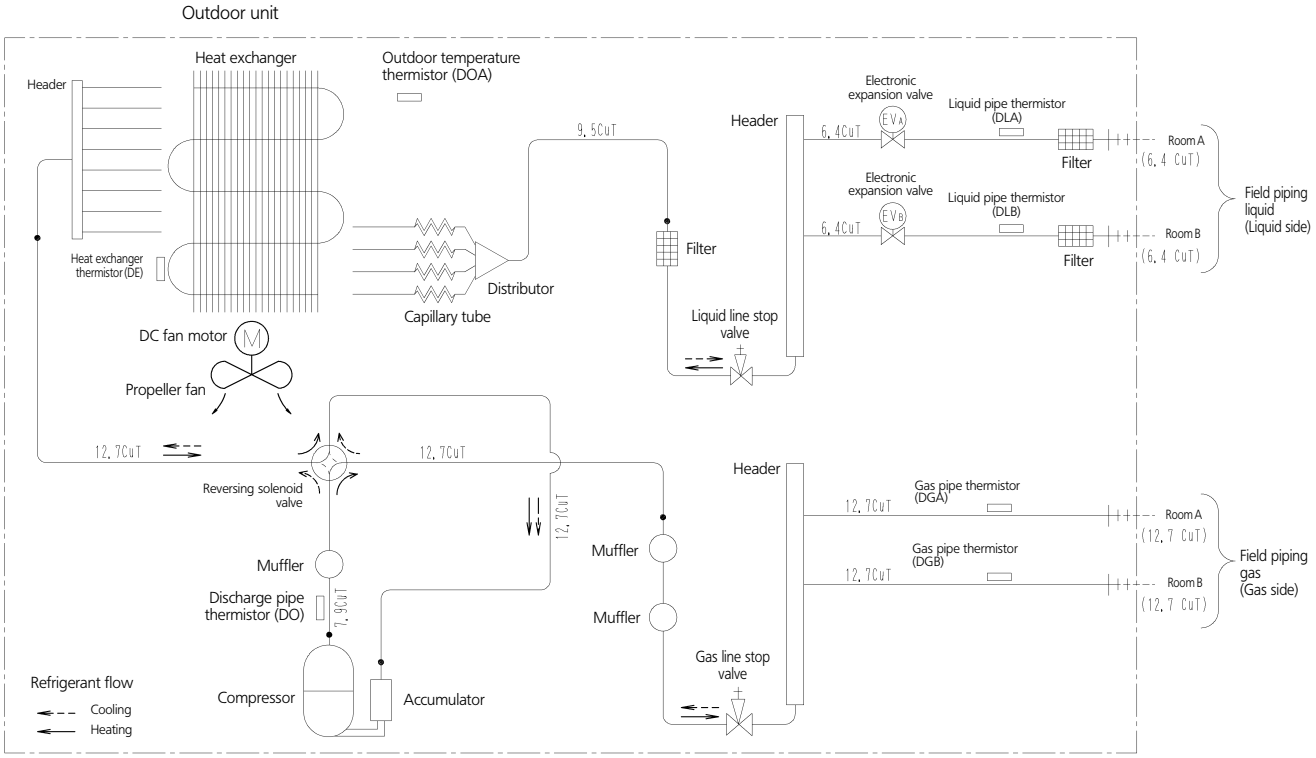

3D052054

7 Piping diagram

3MXS52E

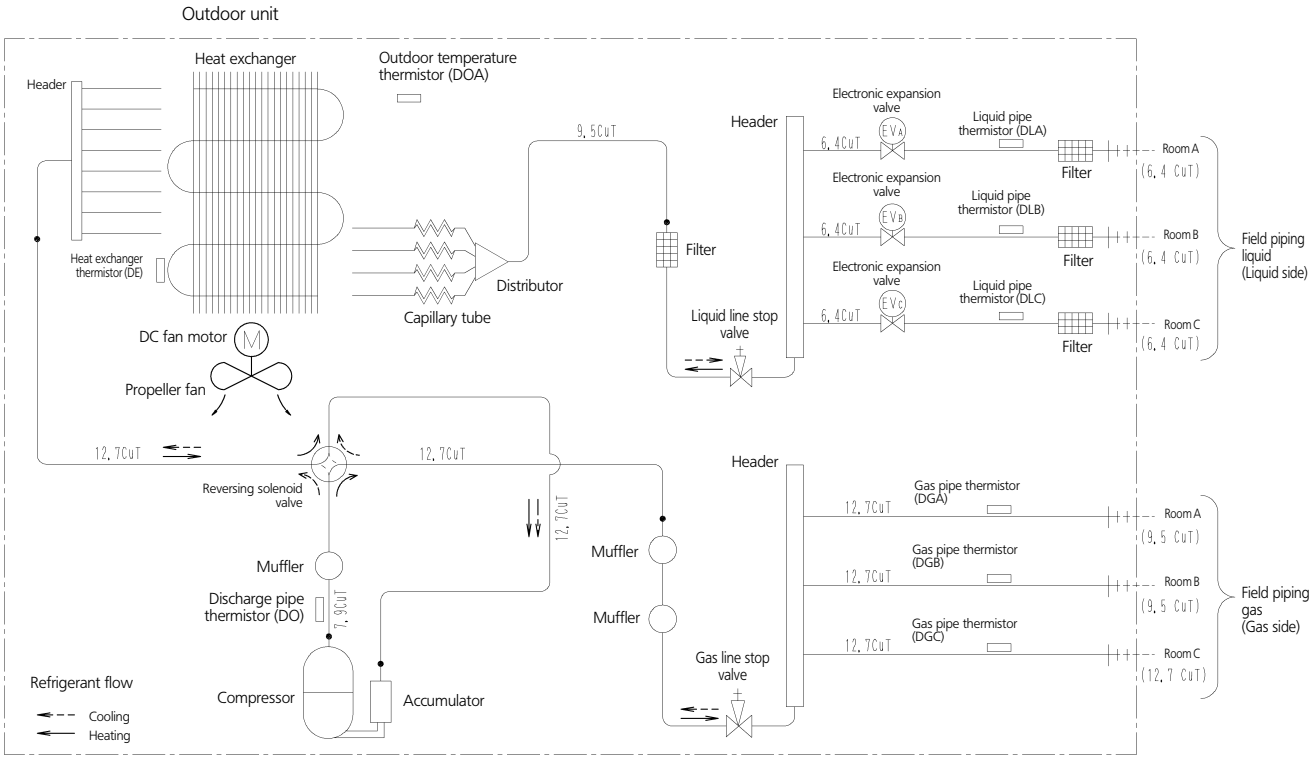

3D052055

4MXS68E

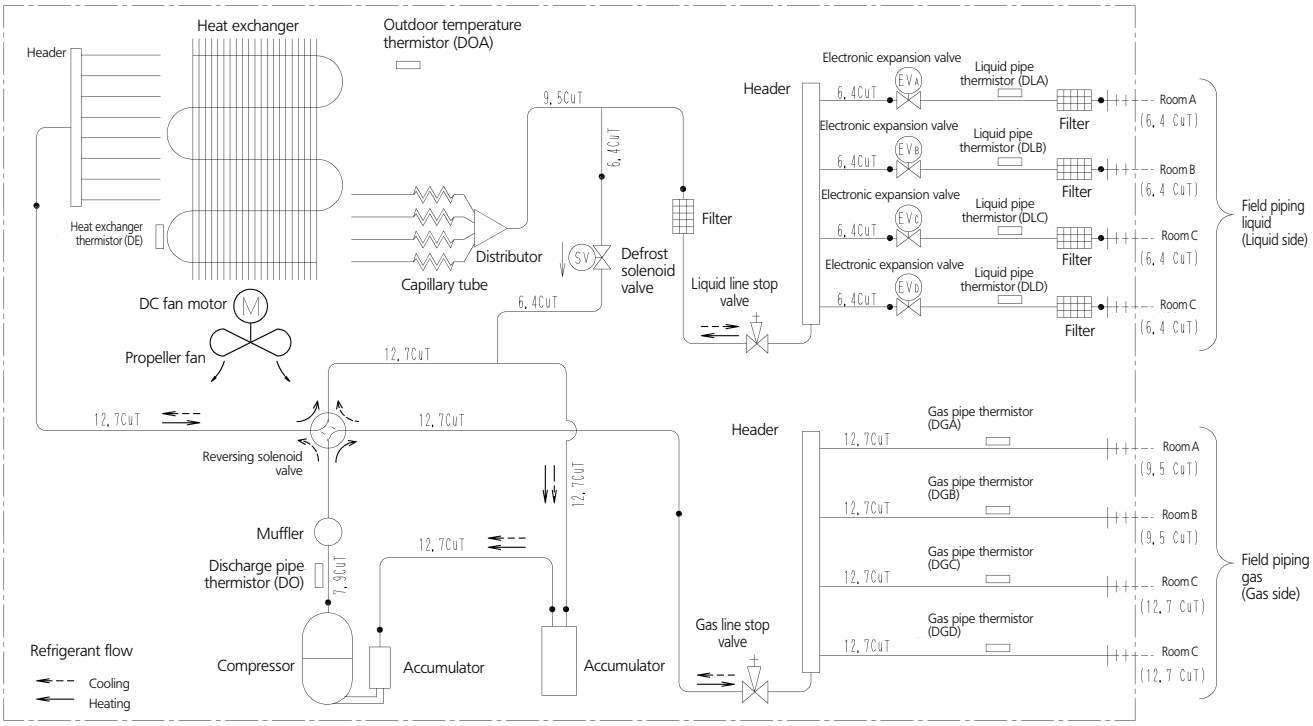

3D034511G

7 Piping diagram

4MXS80E

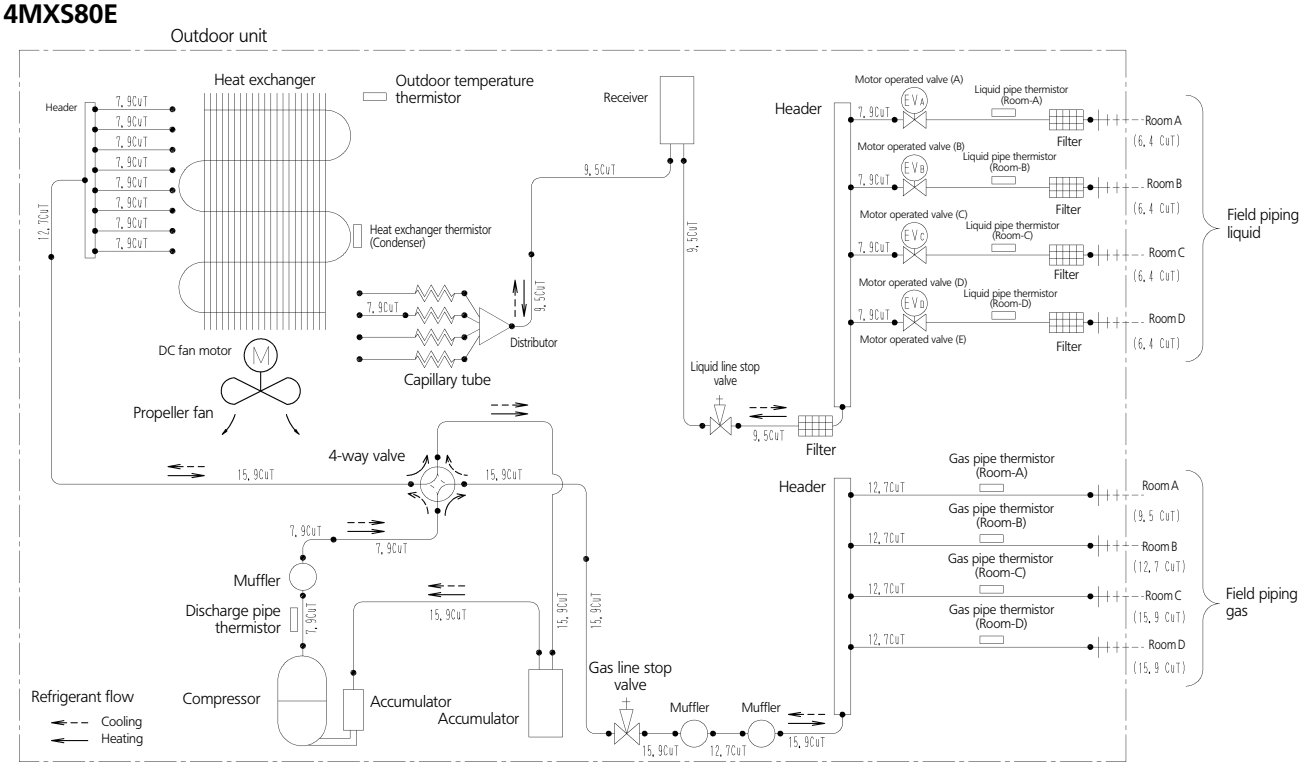

5MXS90E

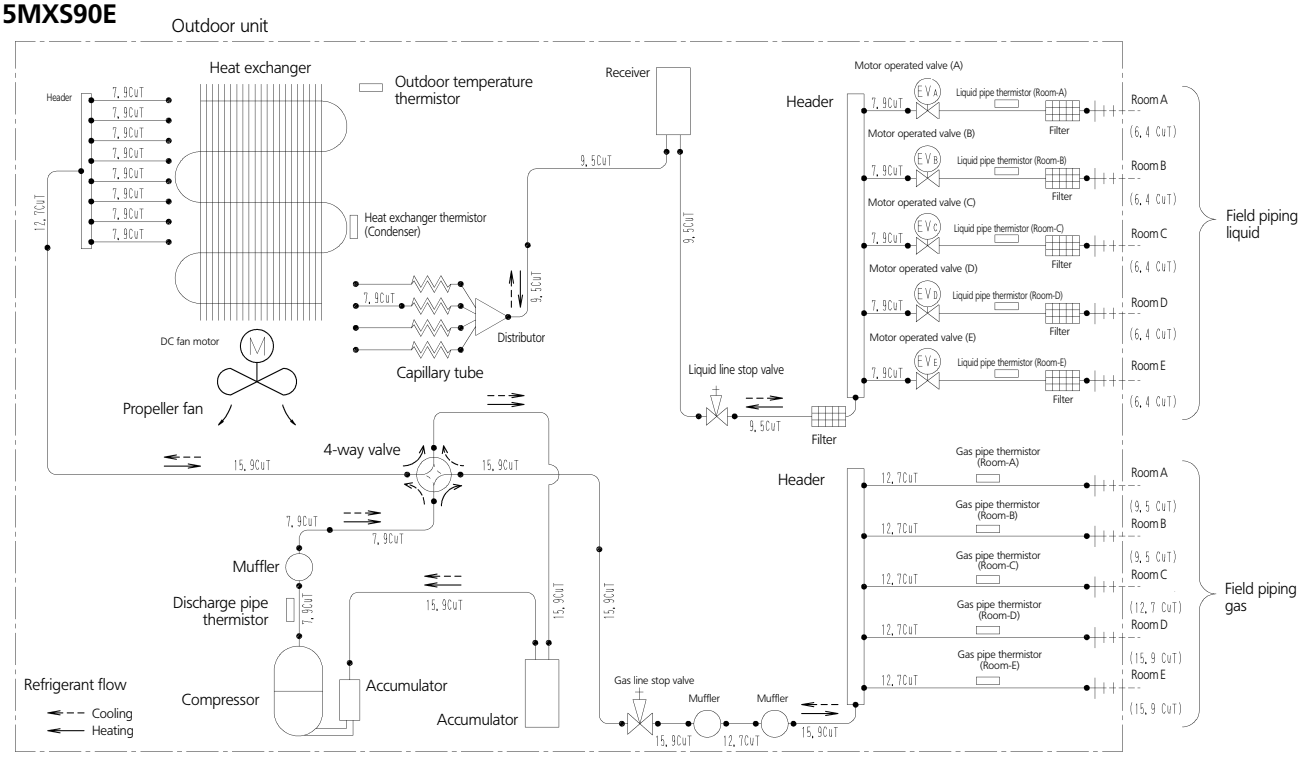

8 Wiring diagram

8 - 1 Wiring diagram

2MXS40D

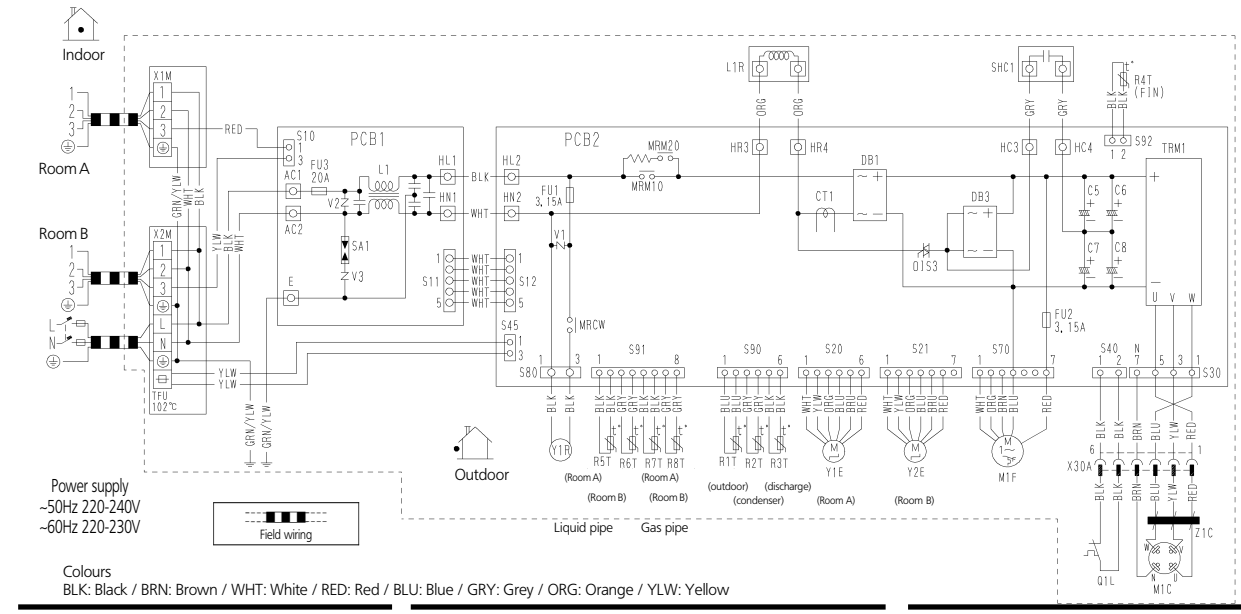

Colours
BLK: Black / BRN: Brown / WHT: White / RED: Red / BLU: Blue / GRY: Grey / ORG: Orange / YLW: Yellow

C5~C8, SHC1	: Capacitor	OIS3	: Solid state relay	⏚	: Protective earth
CT1	: Current transformer	PCB1, PCB2	: Printed circuit board	S10~S12, S20, S21, S30	
DB1, DB3	: Diode bridge	Q1L	: Overload protector	S40, S45, S70, S80, S90~S92,	
F1U~F3U	: Fuse	R1T~R8T	: Thermistor	HL1, HL2, HN1, HN2, HR3, HR4,	
L	: Live	SA1	: Surge arrester	AC1, AC2, HC3, HC4, E, X30A	: Connector
L1	: Coil	TFU	: Thermal fuse		
L1R	: Reactor	TRM1	: Transistor module		
M1C	: Compressor motor	V1, V2, V3	: Varistor		
M1F	: Fan motor	X1M, X2M	: Terminal strip		
MRCW, MRM10,		Y1E, Y2E	: Electronic expansion valve coil		
MRM20	: Magnetic relay	Y1R	: Reversing solenoide valve coil		
N	: Neutral	Z1C	: Ferrite core		

3D039565A

2MXS52E

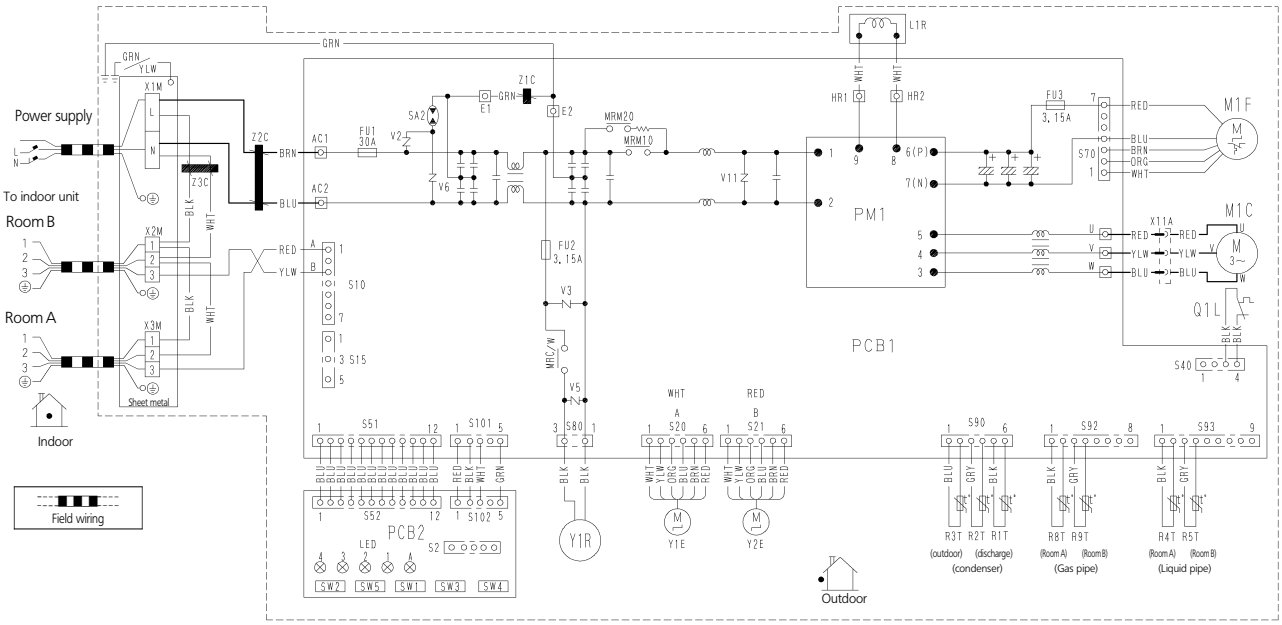

Z1C~Z3C	: Ferrite core	R1T~R5T		M1C	: Compressor motor
X1M~X3M	: Terminal strip	R8T, R9T	: Thermistor	M1F	: Fan motor
Y1E~Y3E	: Electronic expansion valve coil	S2~S102	: Connector	L1R	: Reactor
V2,V3,V5,V6,V11	: Varistor	LED1~LED4		Q1L	: Overload protector
SA2	: Surge arrester	LEDA	: Pilot lamp	PM1	: Power module
FU1, FU2, FU3	: Fuse	L	: Live	PCB1, 2	: Printed circuit board
AC1, AC2		N	: Neutral	Y1R	: Reversing solenoid valve
U, V, W, X11A		S1W	: Forced operation on/off switch (SW1)	Sheet metal	: Terminal strip fixed plate
E1, E2		S2W	: Select SW (SW2)		
HR1, HR2	: Connector	S3W	: Wiring error check SW (SW3)		
MRM10, MRM20		S4W	: Priority room setting SW (SW4)		
MRC/W	: Magnetic relay	S5W	: Night quiet mode setting SW (SW5)		

3D051011-1

8 Wiring diagram

8 - 1 Wiring diagram

3MXS52E

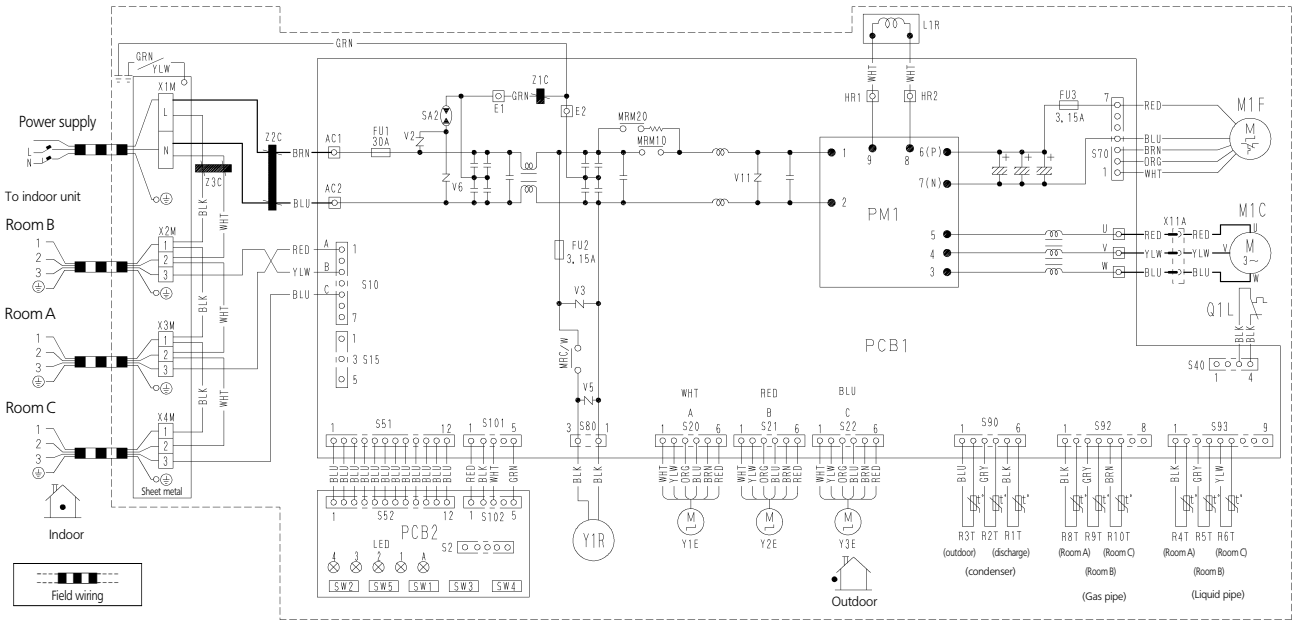

Z1C–Z3C	: Ferrite core	R1T–R6T		M1C	: Compressor motor
X1M–X4M	: Terminal strip	R8T–R10T	: Thermistor	M1F	: Fan motor
Y1E–Y3E	: Electronic expansion valve coil	S2–S102	: Connector	L1R	: Reactor
V2,V3,V5,V6,V11	: Varistor	LED1–LED4		Q1L	: Overload protector
SA2	: Surge arrester	LEDA	: Pilot lamp	PM1	: Power module
FU1, FU2, FU3	: Fuse	L	: Live	PCB1, 2	: Printed circuit board
AC1, AC2		N	: Neutral	Y1R	: Reversing solenoid valve
U, V, W, X11A		S1W	: Forced operation on/off switch (SW1)	Sheet metal	: Terminal strip fixed plate
E1, E2		S2W	: Select SW (SW2)		
HR1, HR2	: Connector	S3W	: Wiring error check SW (SW3)		
MRM10, MRM20		S4W	: Priority room setting SW (SW4)		
MRC/W	: Magnetic relay	S5W	: Night quiet mode setting SW (SW5)		

3D051012-1

4MXS68E

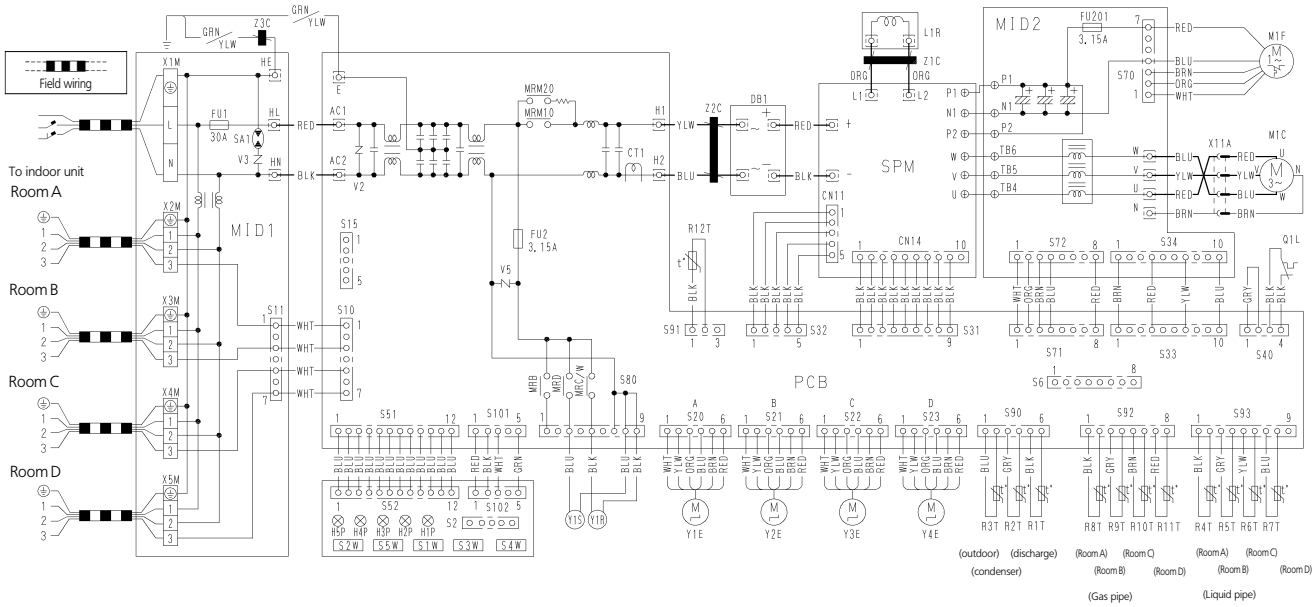

Z1C–Z3C	: Ferrite core	R1T–R12T	: Thermistor	Y1S	: Defrost solenoid valve coil
X1M–X5M	: Terminal strip	S2–S102	: Connector	PCB	: Printed circuit board
Y1E–Y4E	: Electronic expansion valve coil	H1P–H5P	: Pilot lamp	DB1	: Diode bridge
V2–V5	: Varistor	L	: Live	M1C	: Compressor motor
FU1, FU2, FU201	: Fuse	N	: Neutral	M1F	: Fan motor
HE, HL, HN		S1W	: Forced operation on/off switch (SW1)	L1R	: Reactor
E, AC1, AC2		S2W	: Select SW (SW2)	Q1L	: Overload protector
H1, H2, L1		S3W	: Wiring error check SW (SW3)	CT1	: Current transformer
L2	: Connector	S4W	: Priority room setting SW (SW4)	MID1–MID2	: Molded interconnect device
MRM10, MRM20		S5W	: Night quiet mode setting SW (SW5)	SPM	: System power module
MRB, MRD		SA1	: Surge arrester		
MRC/W	: Magnetic relay	Y1R	: Reversing solenoid valve		

3D034312J

8 Wiring diagram

8 - 1 Wiring diagram

4MXS80E

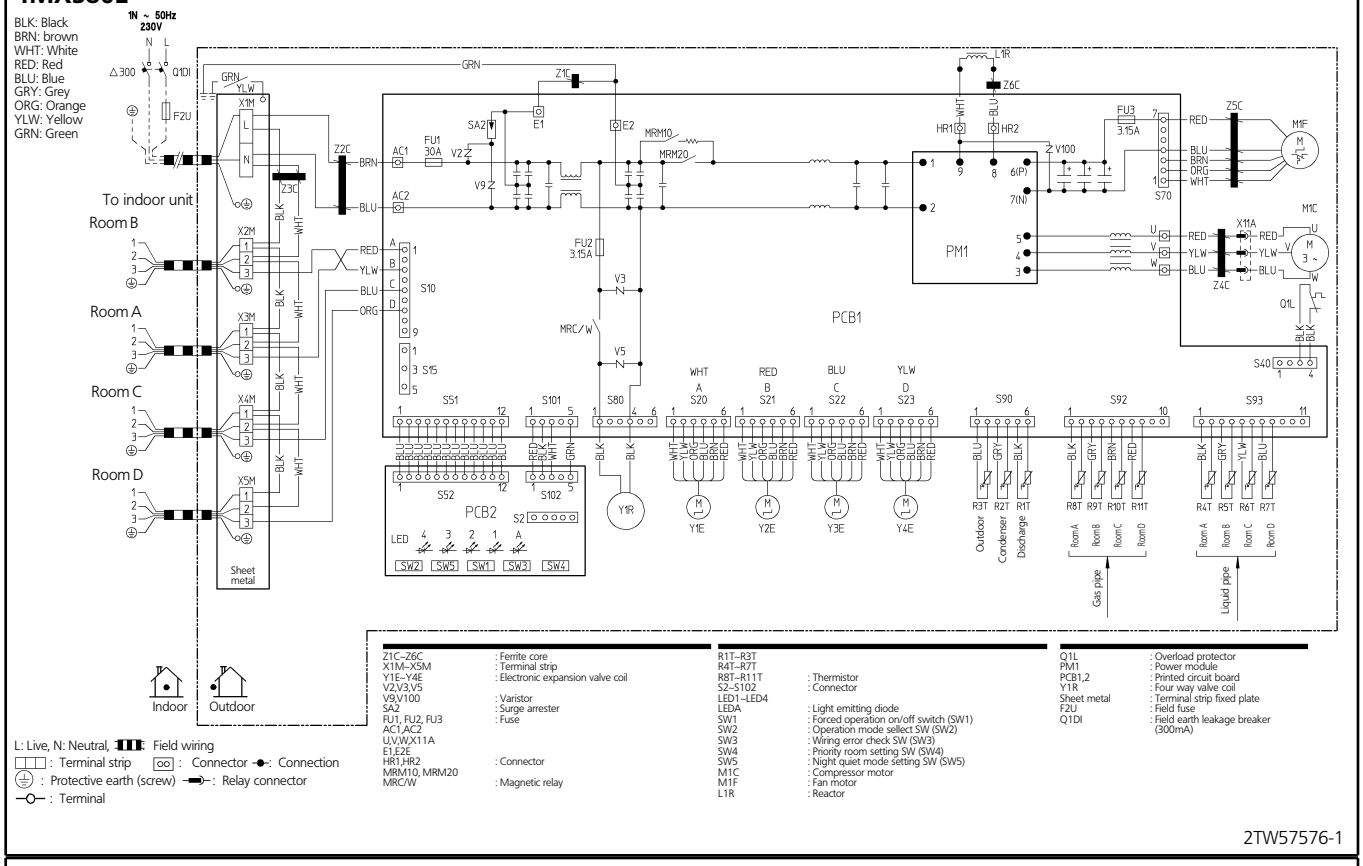

Z1C–Z6C	: Ferrite core
X1M–X5M	: Terminal strip
Y1E–Y4E	: Electronic expansion valve coil
V2,V3,V5	
V9,V100	: Varistor
SA2	: Surge arrester
FU1, FU2, FU3	: Fuse
AC1,AC2	
U,V,W,X11A	
E1,E2E	
HR1,HR2	: Connector
MRM10, MRM20	
MRC/W	: Magnetic relay
R1T–R3T	
R4T–R7T	
R8T–R11T	: Thermistor
S2–S102	: Connector
LED1–LED4	
LEDA	: Light emitting diode
SW1	: Forced operation on/off switch (SW1)
SW2	: Operation mode sellect SW (SW2)
SW3	: Wiring error check SW (SW3)
SW4	: Priority room setting SW (SW4)
SW5	: Night quiet mode setting SW (SW5)
M1C	: Compressor motor
M1F	: Fan motor
L1R	: Reactor
Q1L	: Overload protector
PM1	: Power module
PCB1,2	: Printed circuit board
Y1R	: Four way valve coil
Sheet metal	: Terminal strip fixed plate
F2U	: Field fuse
Q1DI	: Field earth leakage breaker (300mA)

L: Live, N: Neutral, Field wiring
: Terminal strip : Connector : Connection
: Protective earth (screw) : Relay connector
: Terminal

2TW57576-1

5MXS90E

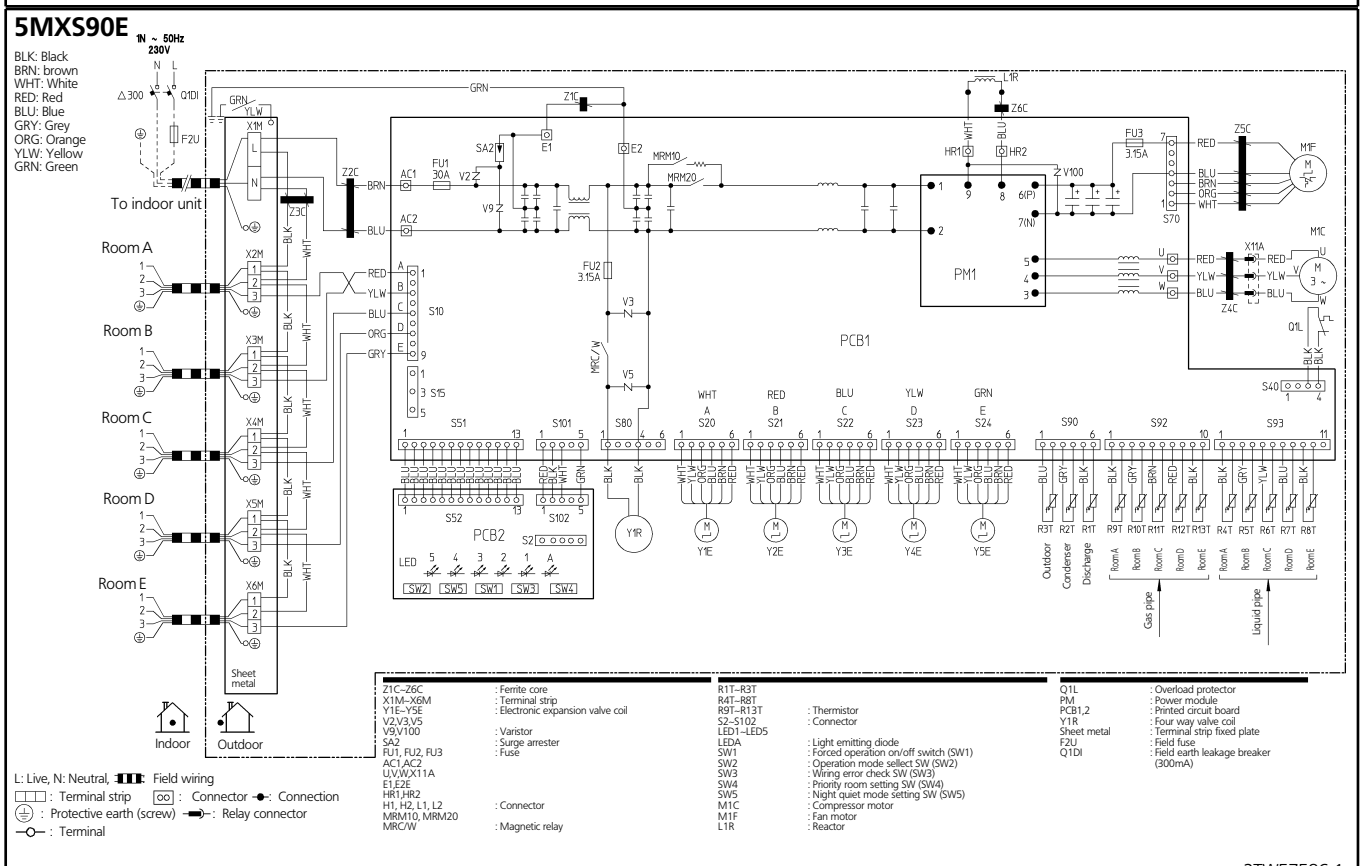

Z1C–Z6C	: Ferrite core
X1M–X6M	: Terminal strip
Y1E–Y5E	: Electronic expansion valve coil
V2,V3,V5	
V9,V100	: Varistor
SA2	: Surge arrester
FU1, FU2, FU3	: Fuse
AC1,AC2	
U,V,W,X11A	
E1,E2E	
HR1,HR2	
H1, H2, L1, L2	: Connector
MRM10, MRM20	
MRC/W	: Magnetic relay
R1T–R3T	
R4T–R8T	
R9T–R13T	: Thermistor
S2–S102	: Connector
LED1–LED5	
LEDA	: Light emitting diode
SW1	: Forced operation on/off switch (SW1)
SW2	: Operation mode sellect SW (SW2)
SW3	: Wiring error check SW (SW3)
SW4	: Priority room setting SW (SW4)
SW5	: Night quiet mode setting SW (SW5)
M1C	: Compressor motor
M1F	: Fan motor
L1R	: Reactor
Q1L	: Overload protector
PM	: Power module
PCB1,2	: Printed circuit board
Y1R	: Four way valve coil
Sheet metal	: Terminal strip fixed plate
F2U	: Field fuse
Q1DI	: Field earth leakage breaker (300mA)

L: Live, N: Neutral, Field wiring
: Terminal strip : Connector : Connection
: Protective earth (screw) : Relay connector
: Terminal

2TW57586-1

9 Sound data

9 - 1 Sound pressure spectrum

2MXS40D (Cooling)

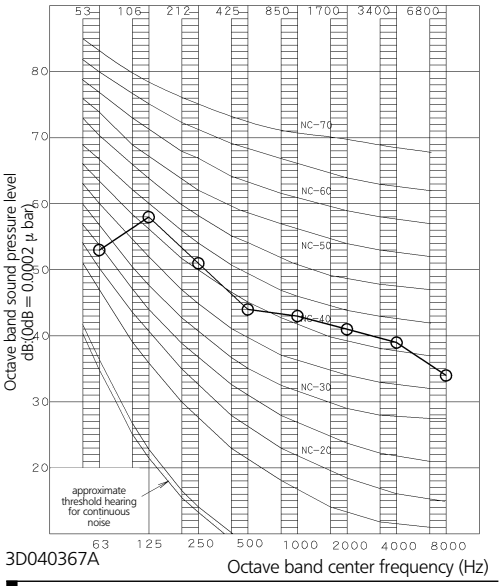

NOTES

1 Operation sound is measured in an anechoic chamber.

2 Operation sound level differs with operation and ambient conditions.

3 Reference acoustic pressure 0dB = 20μPa

Legend

50/60Hz, 220-240/220-230V

2MXS40D (Heating)

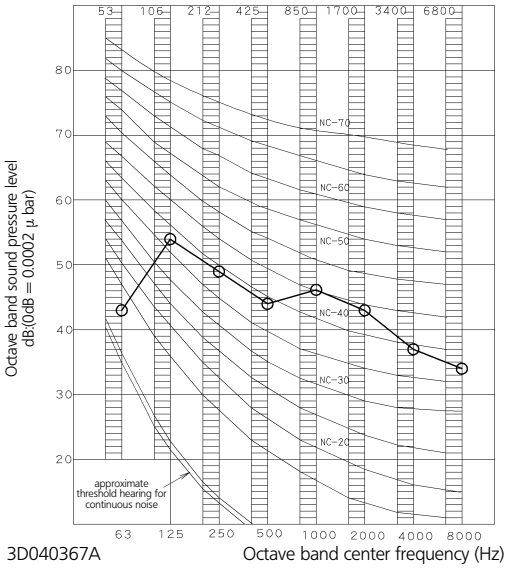

NOTES

1 Operation sound is measured in an anechoic chamber.

2 Operation sound level differs with operation and ambient conditions.

3 Reference acoustic pressure 0dB = 20μPa

Legend

50/60Hz, 220-240/220-230V

4MXS68E (Cooling)

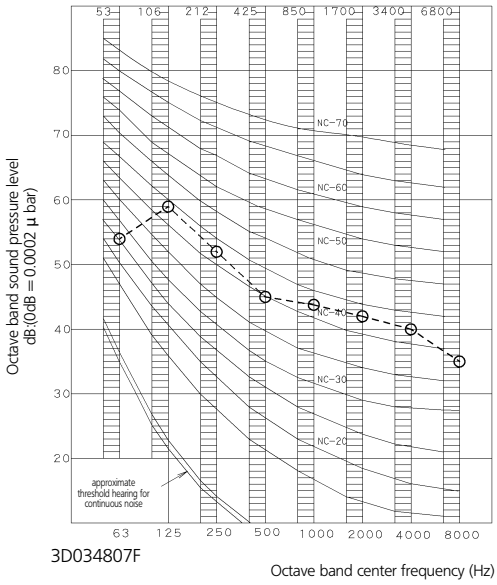

NOTES

1 Operation sound is measured in an anechoic chamber.

2 Operation sound level differs with operation and ambient conditions.

3 The operation noise measuring method is in accordance with JISC9612

4MXS68E (Heating)

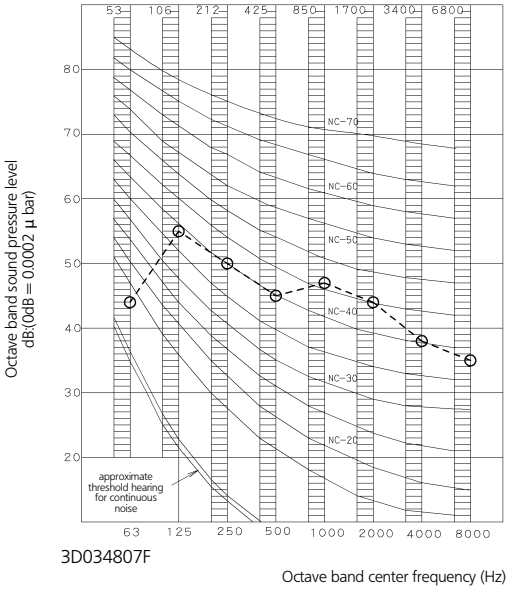

NOTES

1 Operation sound is measured in an anechoic chamber.

2 Operation sound level differs with operation and ambient conditions.

3 The operation noise measuring method is in accordance with JISC9612

9 Sound data

9 - 1 Sound pressure spectrum

4MXS80E (Cooling)

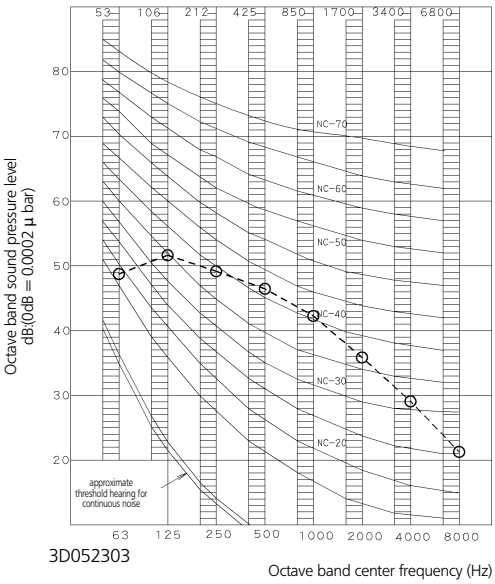

NOTES

1 Operation sound is measured in an anechoic chamber.
2 Operation sound level differs with operation and ambient conditions.
3 The operation noise measuring method is in accordance with JISC9612

4MXS80E (Heating)

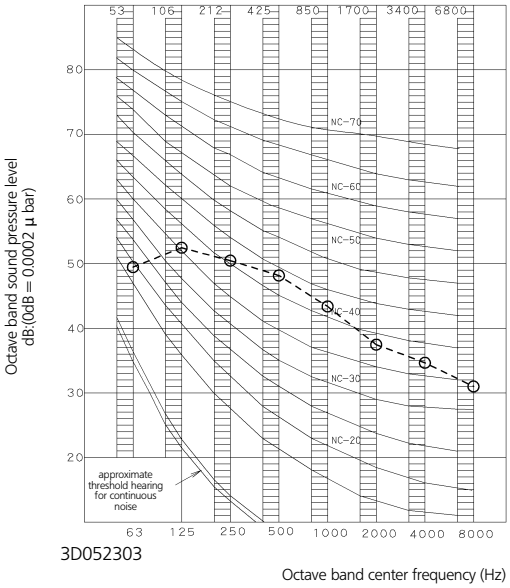

NOTES

1 Operation sound is measured in an anechoic chamber.
2 Operation sound level differs with operation and ambient conditions.
3 The operation noise measuring method is in accordance with JISC9612

5MXS90E (Cooling)

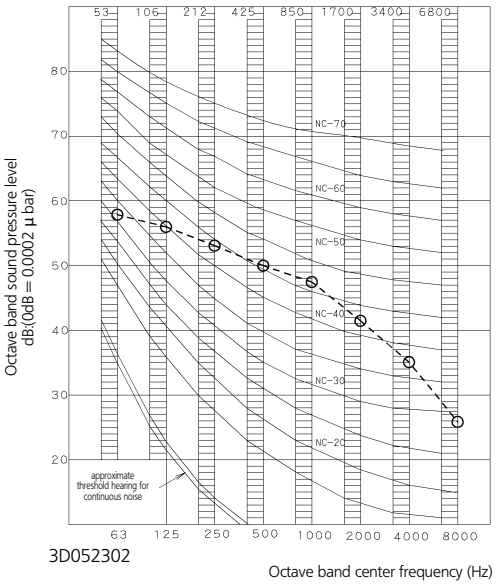

NOTES

1 Operation sound is measured in an anechoic chamber.
2 Operation sound level differs with operation and ambient conditions.
3 The operation noise measuring method is in accordance with JISC9612

5MXS90E (Heating)

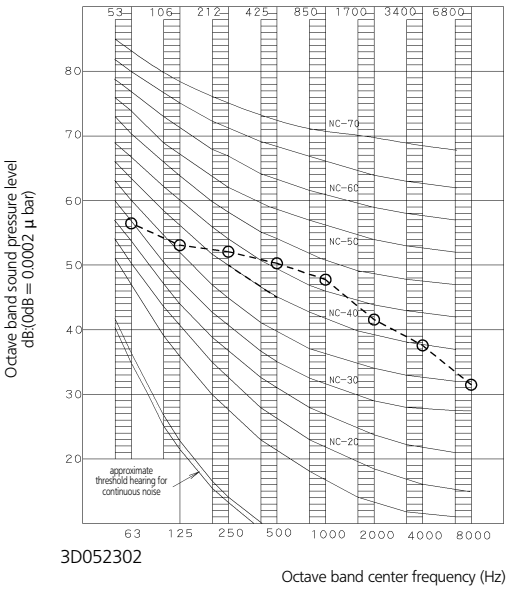

NOTES

1 Operation sound is measured in an anechoic chamber.
2 Operation sound level differs with operation and ambient conditions.
3 The operation noise measuring method is in accordance with JISC9612

9 Sound data

9 - 2 Sound power spectrum

4MXS80E

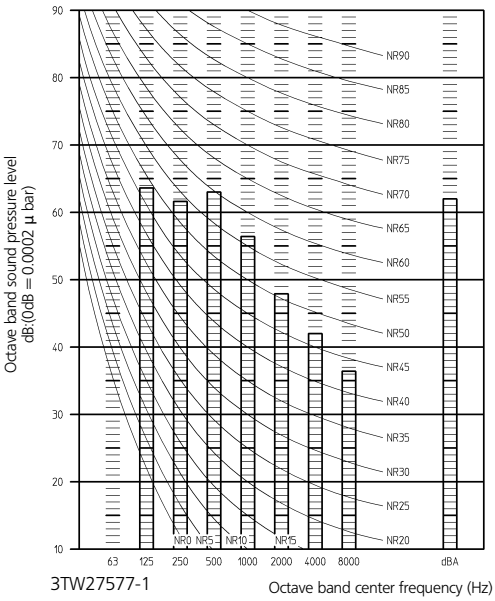

NOTES

1 dB(A) = A-weighted sound power level (A-scale according to IEC)
2 Reference acoustic intensity 0dB = 10E-6 μW/m^2
3 Measured according to ISO 3744

5MXS90E

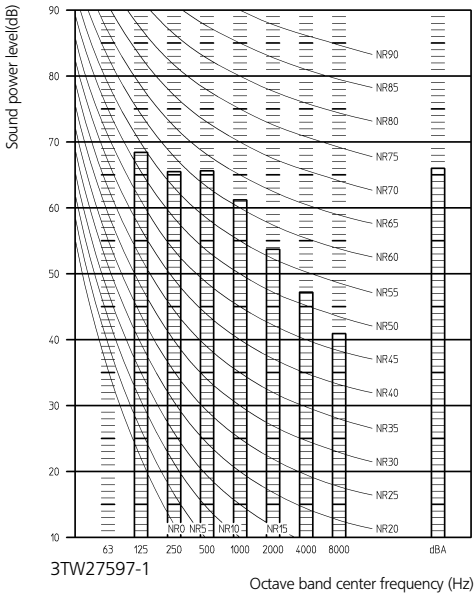

NOTES

1 dBA = A-weighted sound power level (A-scale according to IEC)
2 Refernece acoustic intensity 0dB = 10E-6μW/m^2
3 Measured according to ISO 3744

10 Operation range

2MXS40D

Cooling **(50 / 60 Hz)** **Heating**

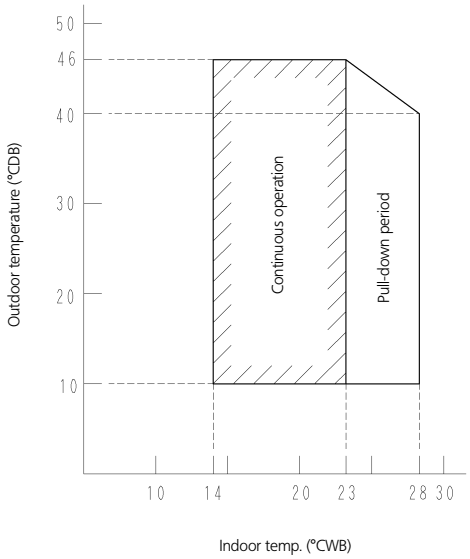

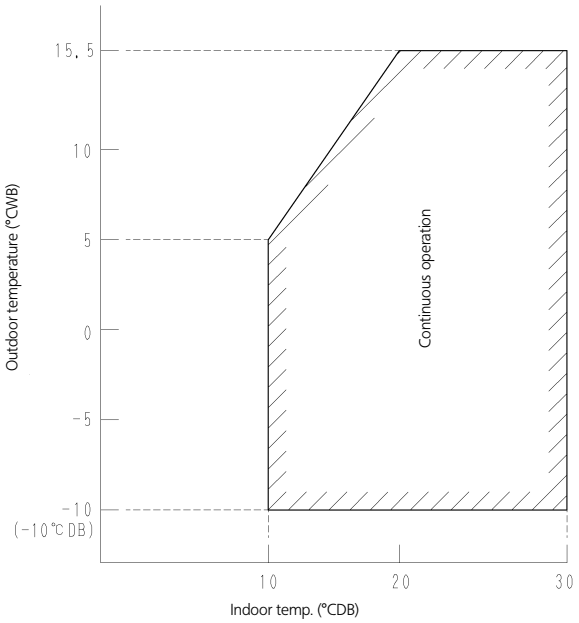

Notes:

The graphs are based on the following conditions:

- Equivalent piping length 7.5m
- Level difference 0m
- Air flow rate Hi speed

3D040365A

2MXS52E, 3MXS52E, 4MXS68E

Cooling **(50 / 60 Hz)** **Heating**

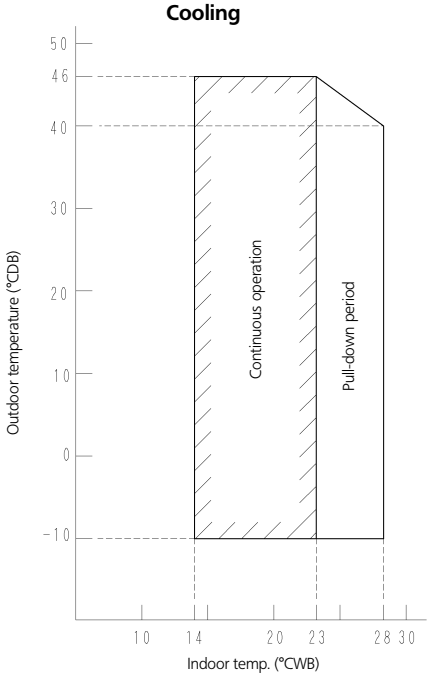

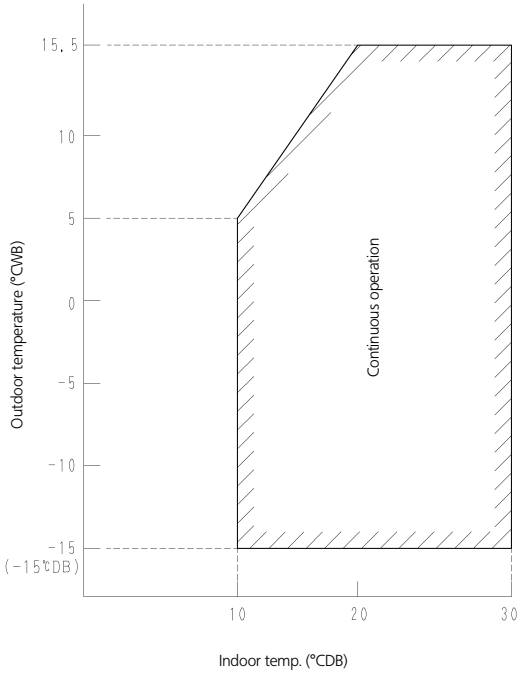

Notes:

The graphs are based on the following conditions:

- Equivalent piping length 7.5m
- Level difference 0m
- Air flow rate Hi speed

3D034956H

10 Operation range

4MXS80E, 5MXS90E

Cooling **(50 / 60 Hz)** **Heating**

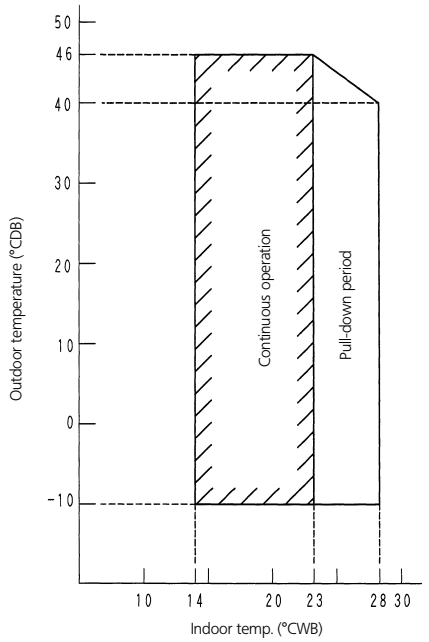

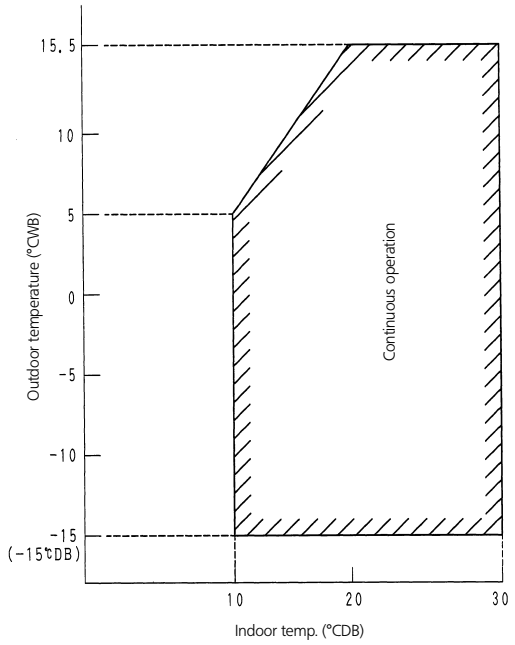

Notes:

The graphs are based on the following conditions:

- Equivalent piping length 7.5m
- Level difference 0m
- Air flow rate Hi speed

3D052043

10 Operation range