KLIMAIRE®

KFTC Series

18,000 to 48,000 Btu/h

Cooling Only & Heat Pump

INSTALLATION MANUAL

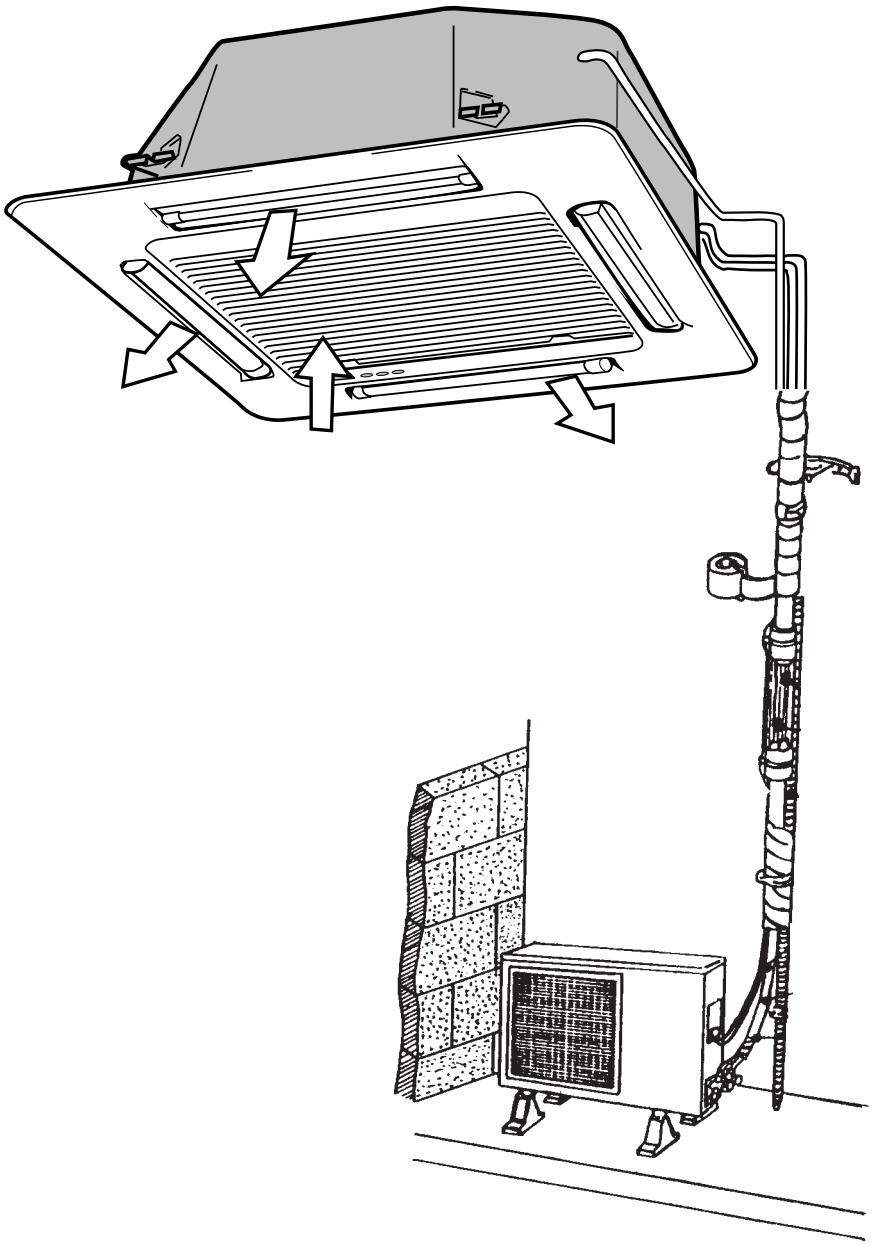

INSTALLATION
INSTRUCTIONS

CEILING CASSETTE TYPE INDOOR UNIT

● Read this installation instructions carefully before installing the unit ●

MODEL **KFTC018 / 024** SERIES
KFTC036 / 048 SERIES

COOLING ONLY OR HEAT PUMP SYSTEM

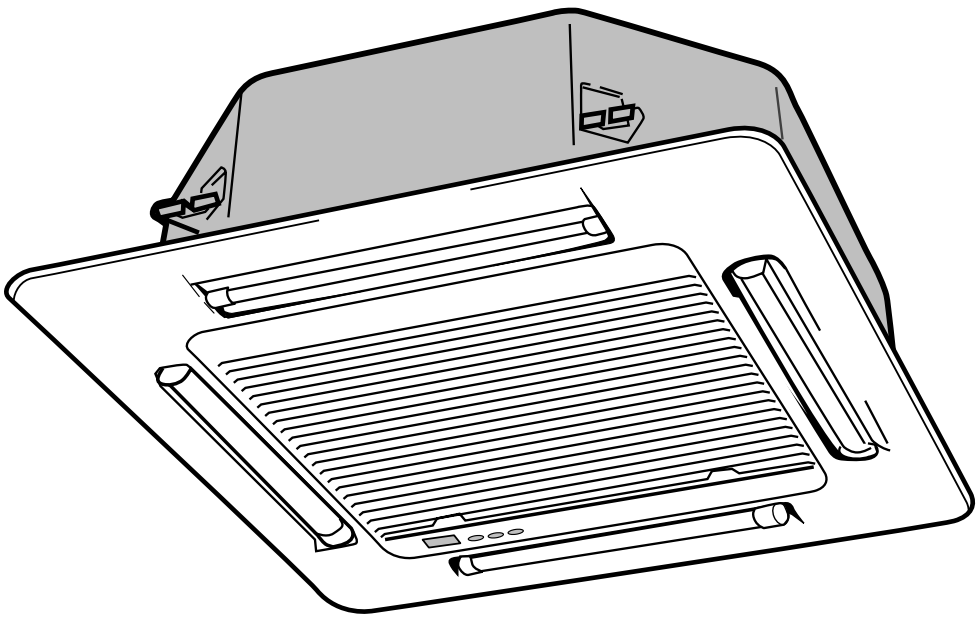

INSTALLATION DIAGRAM AND ACCESSORIES

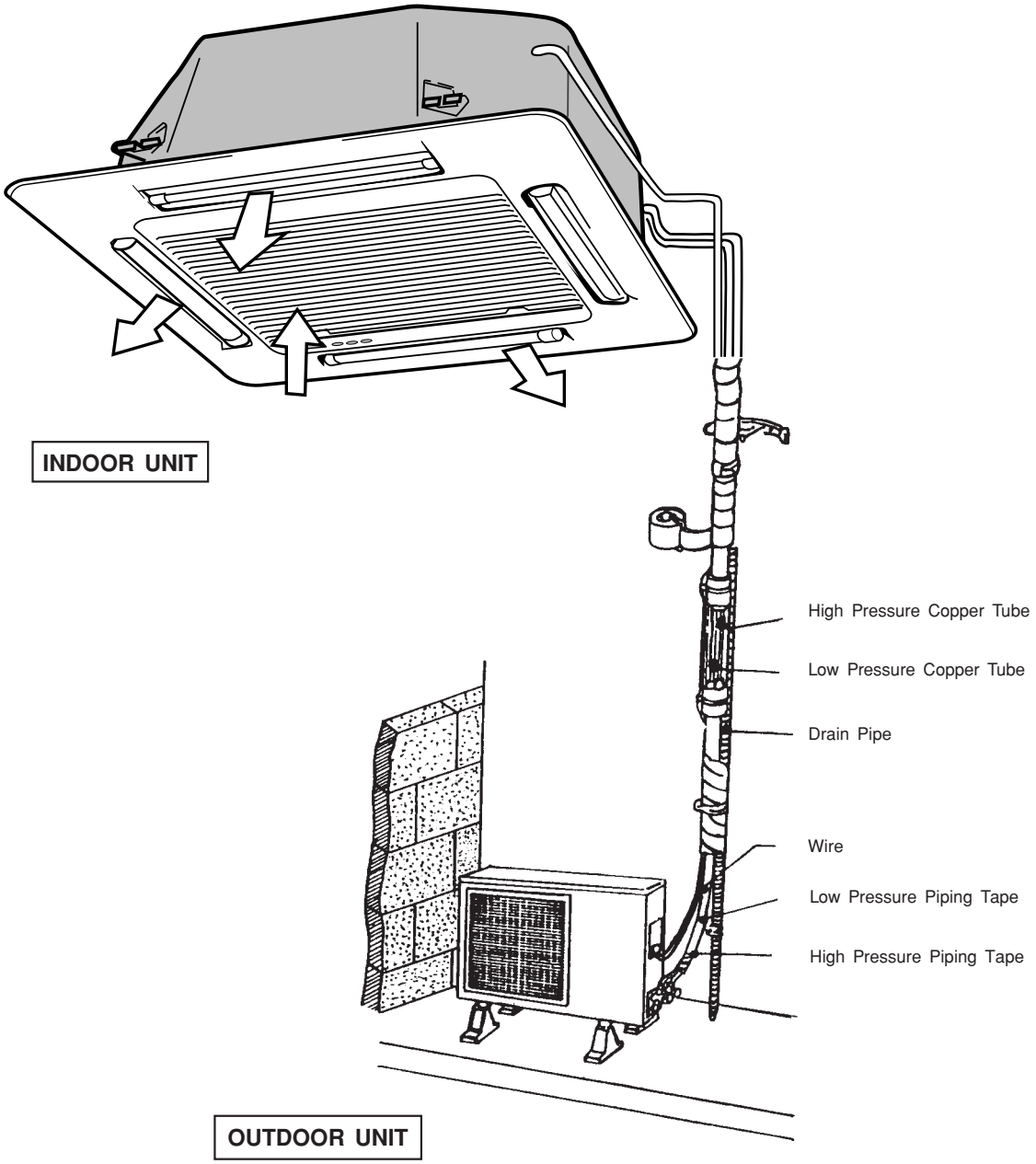

1 INDOOR UNIT INSTALLATION

■ WHERE TO INSTALL INDOOR UNIT :

- There should not be any heat source or steam near the unit.
- There should not be any obstacles to prevent the air circulation.
- A place where air circulation in the room will be good.
- A place where drainage can be easily obtained.
- A place where noise prevention is taken into consideration.
- Do not install the unit near the door way.

1.1 INDOOR UNIT DIMENSION.

MODEL	KFTC018	KFTC024	KFTC036	KFTC048
Height above ceiling (A)	235 mm.	235 mm.	285 mm.	285 mm.
Height above suspension brackets (B)	180 mm.	180 mm.	230 mm.	230 mm.
Height of condensate drain above ceiling (C)	230 mm.	230 mm.	280 mm.	280 mm.
Pipe exit position (D)	165 mm.	165 mm.	215 mm.	215 mm.

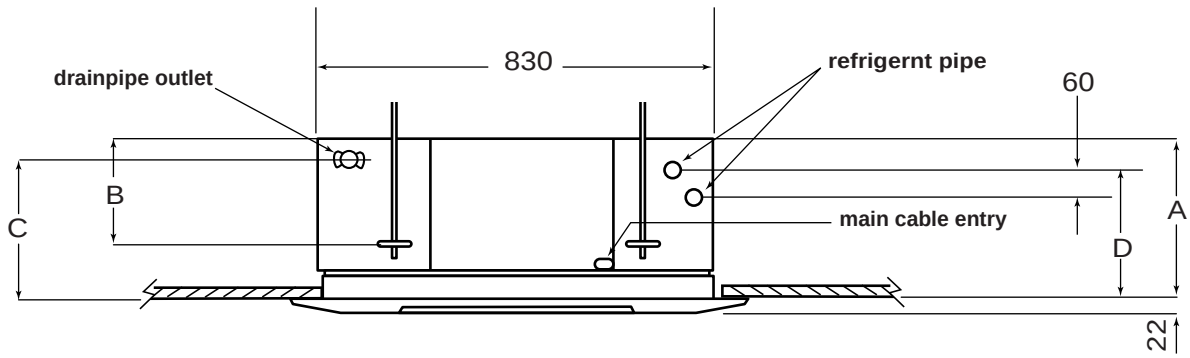

FIG.1

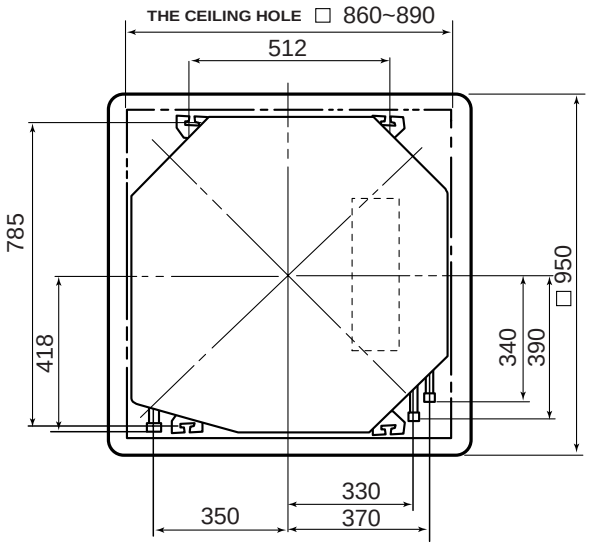

FIG.2

1.2 INDOOR UNIT INSTALLATION.

- Select the location where a space is more than 100 cm. as shown in fig.3 also ensure that the position does not interfere with light fitting, sprinkle head, etc.
- Determine the ceiling hole by using the paper pattern.
- Determine the mounting position on ceiling by using position Ⓐ Ⓑ Ⓒ and Ⓓ in the paper pattern.

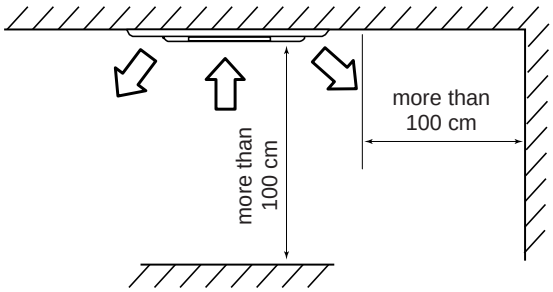

FIG.3

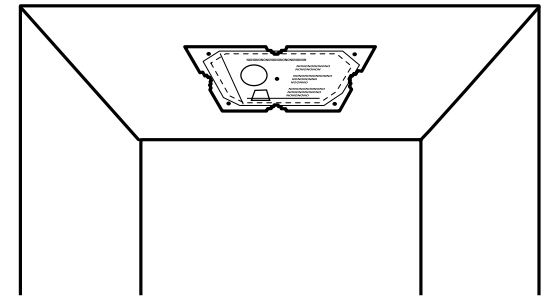

INDOOR UNIT INSTALLATION

- Hang the four mounting rods to the positions marked as picture shown (using twelve nuts and eight washers to support the suspension brackets). Suspend the unit to the mounting rods. Lock the nuts, ensure for good drainsage, and check whether the unit is on horizontal level by using leveling guage.

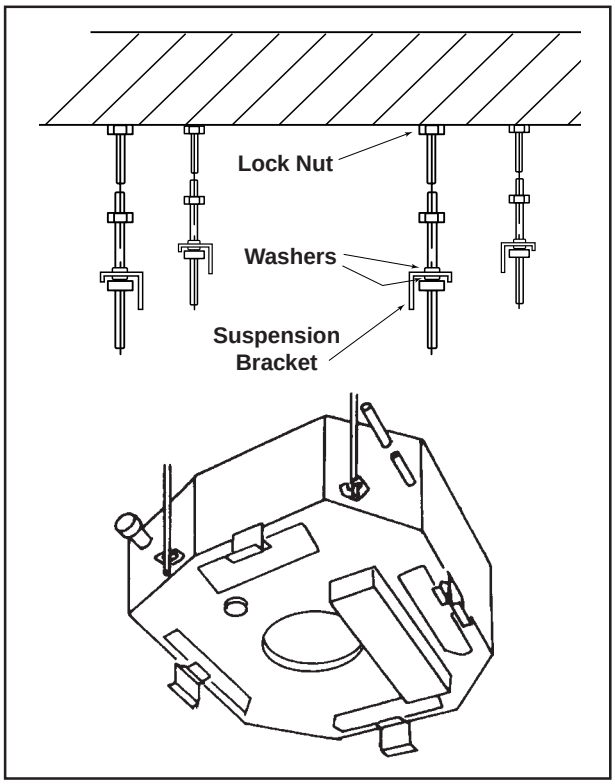

- Install the leveling metal plate to adjust the gap between the unit and a ceiling, fixing the screws following No. ① ② ③ and ④ in paper pattern.

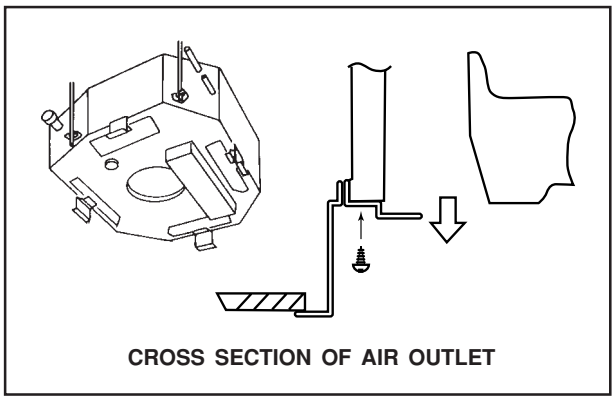

- Remove four screws (M8). Fix the front panel with the units by tighten up four screws (M8).

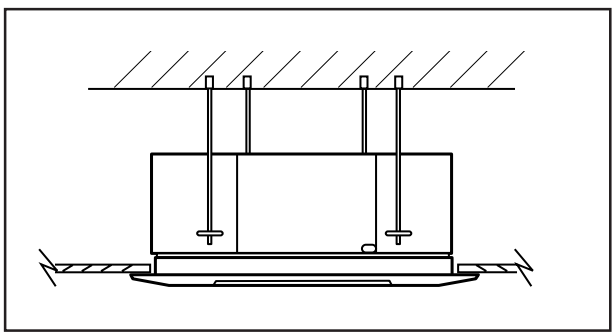

CAUTION *: Overtightening the screws will distort the front panel.*

2 OUTDOOR UNIT INSTALLATION

■ WHERE TO INSTALL OUTDOOR UNIT :

- The foundation must be solid enough to bear the weight and vibration of the unit.
- The space around the unit is adequate for ventilation.
- The location is not close to any flamable gases.
- The location is sufficiently isolated so that the running noise and the hot exhaust air do not disturb the users or their neighbors.
- Easy access to check and to maintain.
- Ensure the spaces indicated by arrows from the wall, ceiling, fence, or other obstacles.

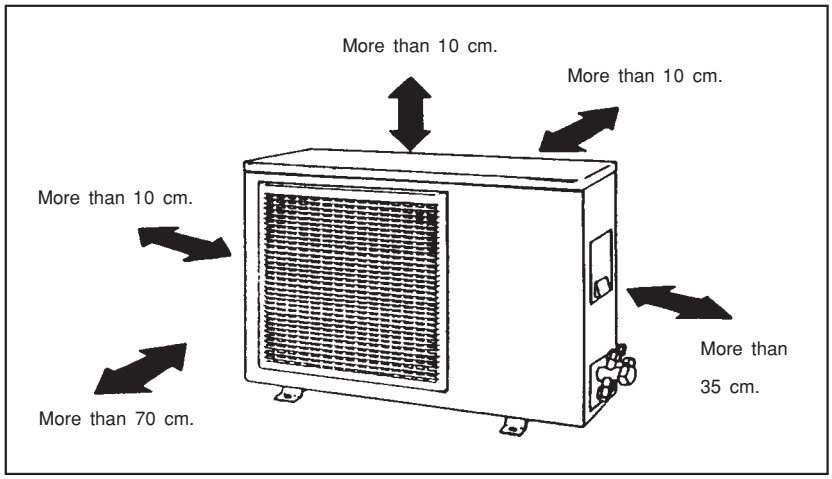

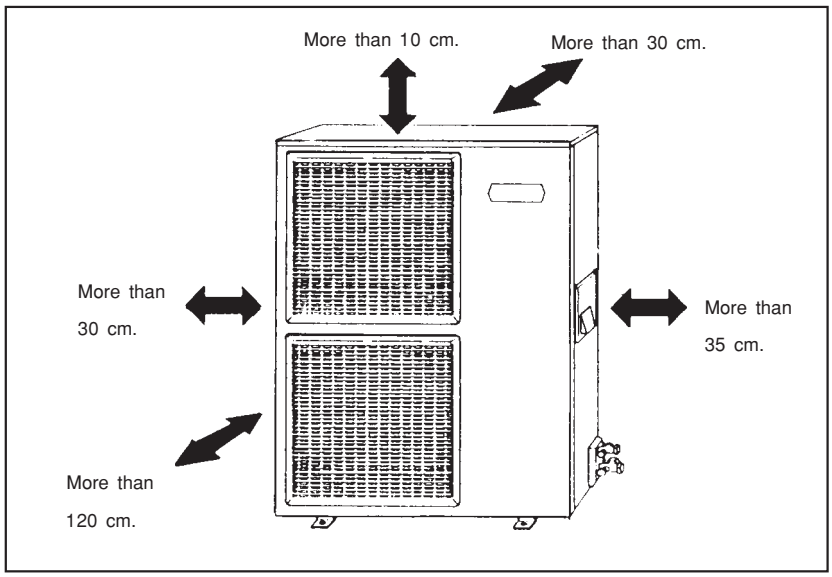

⚠ CAUTION

Installation in the following places may cause problems.
If it is unavoidable to use such places, consult with your distributor or dealer.

- A place with machine oil.
- A saline place such as a place very close to a seashore.
- A place with sulphur gas.
- A place where high-frequency waves are generated by radio equipment, welder and medical equipment.

3 PIPE PREPARATION

■ PIPE & ELECTRICAL WIRE CUTTING

- Use cutting tools easily found in the market.
- Measure precisely both outer & inner pipe.
- Provide a little bit longer pipe than the measurement.
- Wire must be 1.5 m. longer than the refrigerant tube.

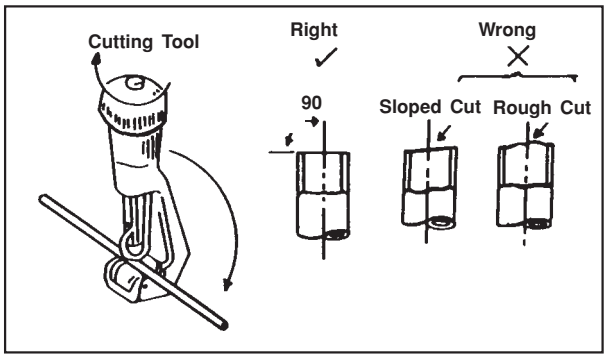

■ REAMING

- Clean inside of the inner refrigerant tube.
- While reaming, the tube end must be on the top of the reamer to prevent any dust going back into the tube.

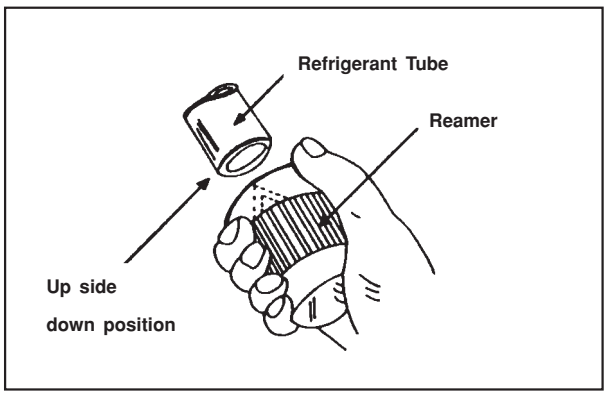

■ FLARING THE PIPE END

- Flare both ends of the pipe with flaring kit by fitting the flare nut on the pipe before flaring. Set the die on the pipe so that pipe end is 0.5 mm. above top of the die. Check if the pipe end is even and perfectly round.

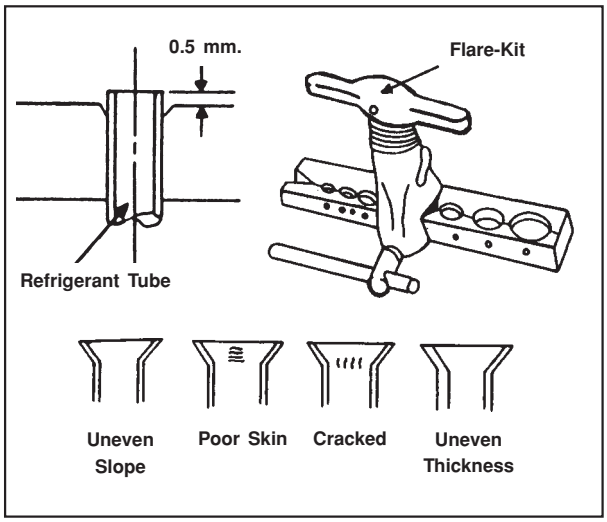

■ WIRE CONNECTION AND TAPE COVERING

(See the picture on the right hand side)

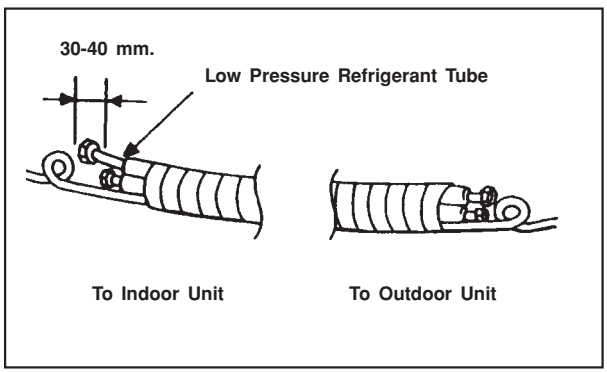

4 REFRIGERANT PIPING WORK

4.1 Select copper pipes for gas and liquid as informed in specific table (see the pipe table below)

4.2 For dust and moisture protection, before assembly of the pipe and its insulation, both ends of the pipe must be covered.

4.3 Avoid pipe bending as much as possible. If it is necessary, the bending radius must be more than 3 cm. or 4 cm.

Gas pipe and liquid pipe insulation depends upon copper pipe size and the insulation thickness = 3/8"

LIQUID PIPE TABLE

MODEL	PIPE SIZE	THICKNESS (mm.)
KFTC018	3/8"	0.8
KFTC024	3/8"	0.8
KFTC036	3/8"	0.8
KFTC048	1/2"	0.8

GAS PIPE TABLE

MODEL	PIPE SIZE	THICKNESS (mm.)
KFTC018	5/8"	1.0
KFTC024	5/8"	1.0
KFTC036	5/8"	1.0
KFTC048	3/4"	1.0

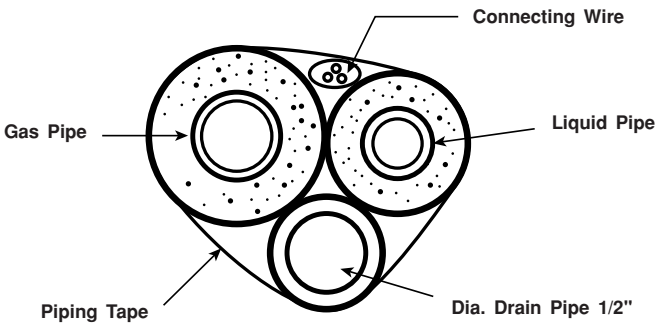

4.4 The connection between an indoor unit and an outdoor unit.

- Unscrew the flare nut for releasing pressure gas in the indoor unit. If there is no high pressure gas blowing out, it is the signal of a leaking indoor unit.
- Fit the flare nut to the liquid pipe. Flare the pipe's end with flare tool.
- Tighten both flare nuts into gas pipe and liquid pipe at the indoor unit with two holding spanners.

■ DRAIN PIPE OUTLET

- A drain pipe and refrigerant pipes must be covered by insulation to prevent condensation.

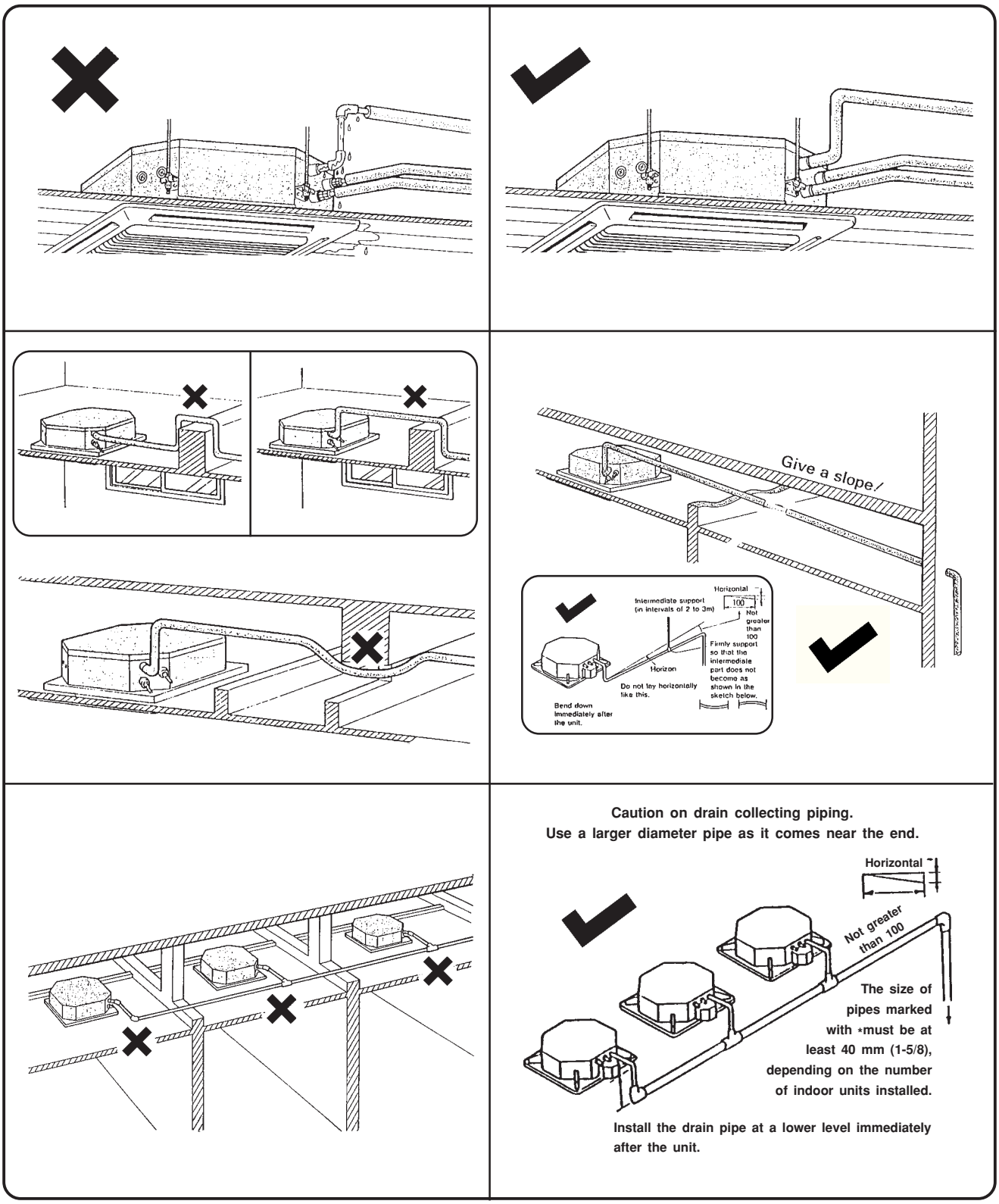

5 AIR PURGING AND CHECK OF PIPE LEAKAGE

■ AIR PURGING

The purpose of air purging is to get rid of moisture and air in the system, otherwise moisture and air may cause ineffectiveness of the compressor which directly affects the cooling capacity.

■ PURGING BY USING VACUUM.

After tightening the flare nuts between the indoor and the outdoor units.

- Remove a blank cap of a three-way valve by using a torque wrench. Check if both high pressure and low pressure valves are in closed condition.
- Remove the nut of the service port.
- Connect a gauge into the service port and a vacuum pump.
- Vacuum until the gauge indicates at 30 inches mercury pressure.
- Remove gauge. Tighten up the nut of the service port.
- Use a hexagonal wrench to open both high pressure and low pressure valves to the end (counter clock-wise).
- Tighten the blank cap of the three-way valve.

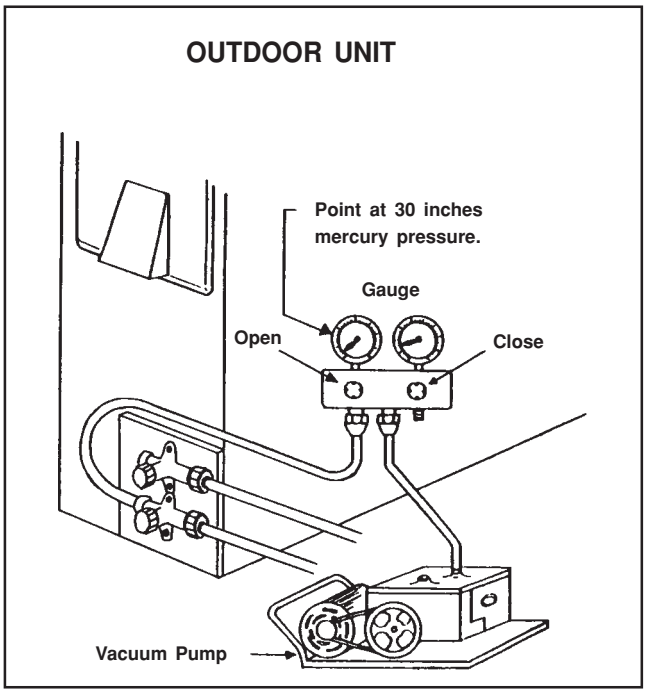

■ GAS LEAKING CHECK

- Check leakage by apply soapsuds to every connection and inspect carefully. After checking, wipe them off completely.
- Cover indoor unit joint with pipe insulation and 4 plastic bands to prevent condensation at joints.

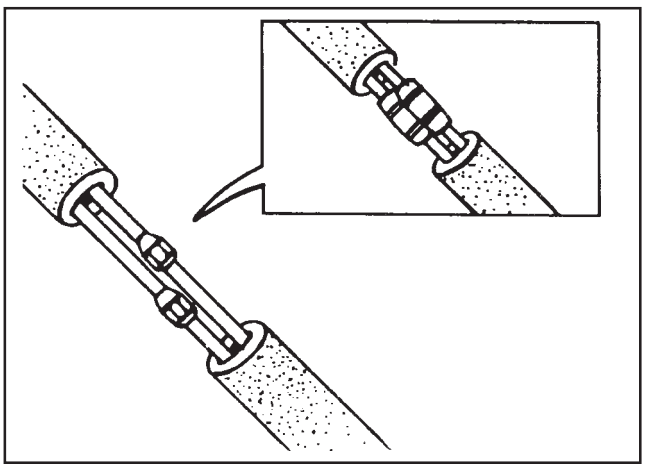

6 WIRING DIAGRAM

- Wiring is to be done as shown in the electrical wiring diagram (Do not change the internal wiring)
- Use copper conduction only.
- How to tighten screw on terminal block.
  1. Bare the ends of electric wire.
  2. After retaining the wire, check that all the terminal screws are firmly tightened.

COOLING ONLY

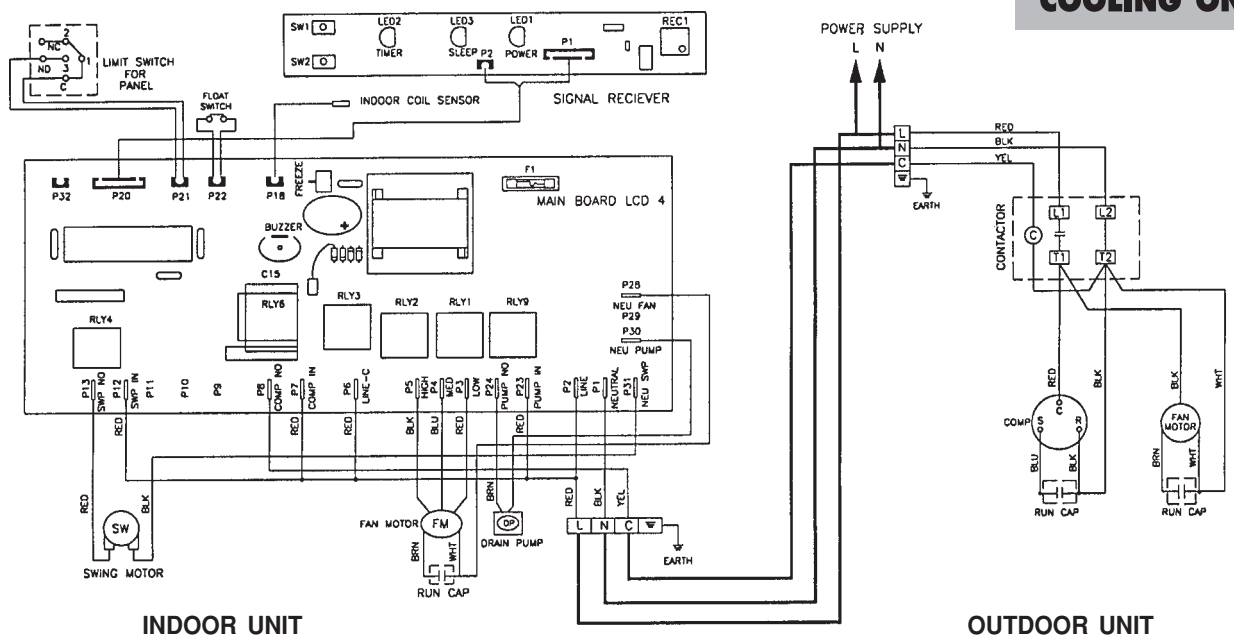

INDOOR UNIT

KFTC018-C KFTC02-C KFTC036-C

OUTDOOR UNIT

KCHB018-C KCHB024-C KCHB036-C

HEAT PUMP

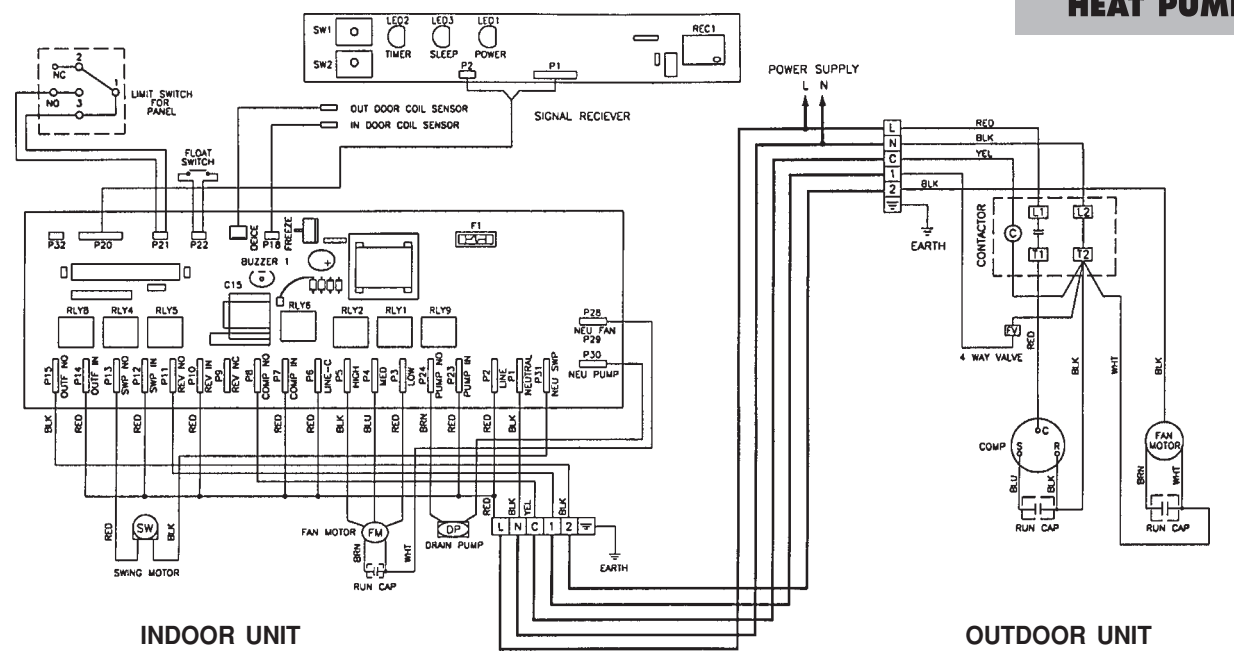

INDOOR UNIT

KFTC018-H KFTC024-H KFTC036-H

OUTDOOR UNIT

KCHB018-H KCHB024-H KCHB036-H

WIRING DIAGRAM

COOLING ONLY

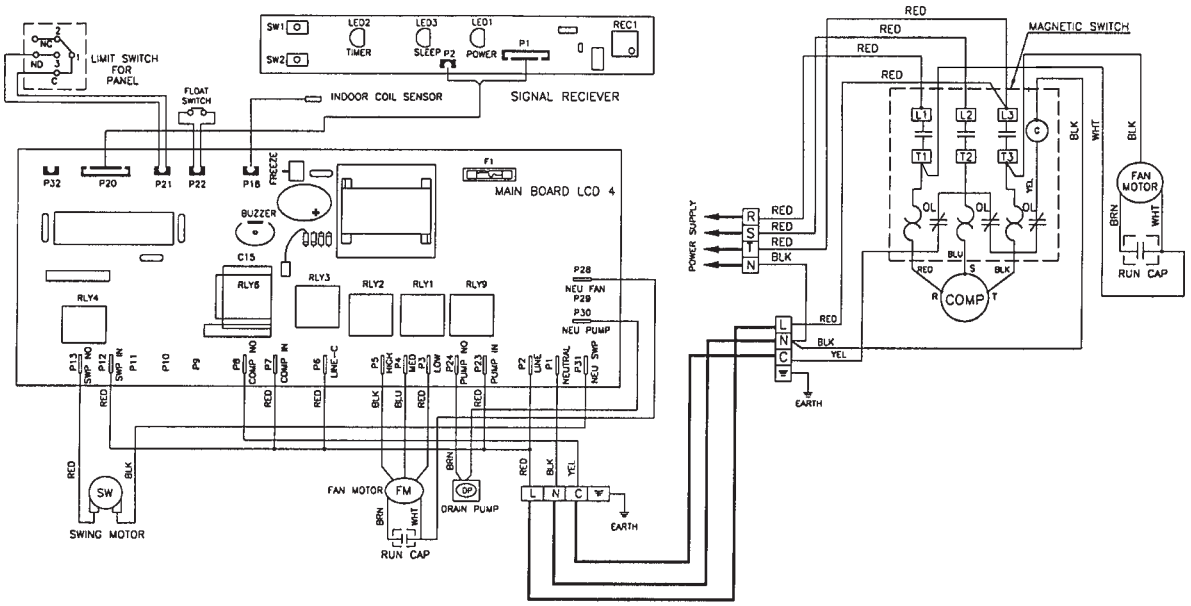

INDOOR UNIT
KFTC036 / 048-C

OUTDOOR UNIT
KCVS036 / 048-C

HEAT PUMP

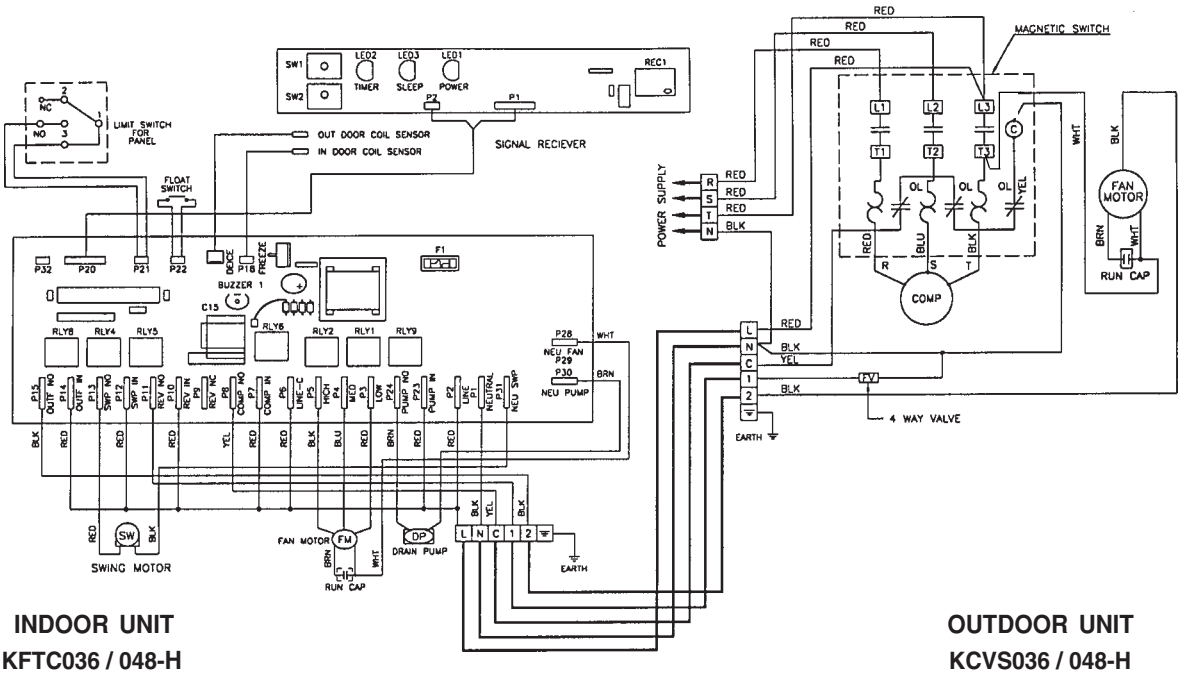

INDOOR UNIT
KFTC036 / 048-H

OUTDOOR UNIT
KCVS036 / 048-H

7 LIQUID PIPE AND DRAIN PIPE

IF THE OUTDOOR UNIT IS INSTALLED LOWER THAN THE INDOOR UNIT (picture 1)

1. A drain pipe should be above ground and the end of the pipe does not dip into water. All pipes must be restrained to the wall by saddles.
2. Taping of the pipes must be done from bottom to top.
3. All pipes are bound together by tape and restrained to the wall by saddles.

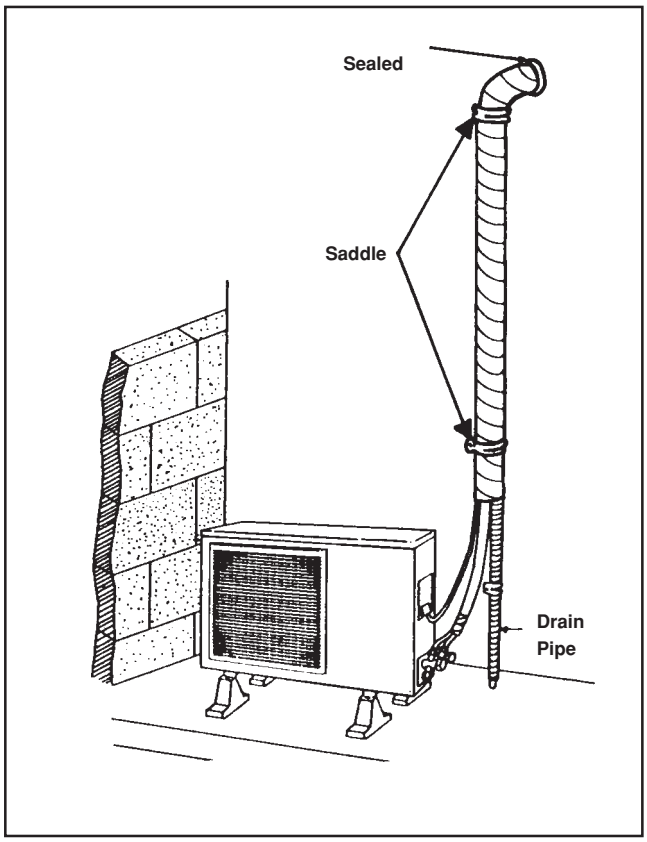

Picture 1

IF THE OUTDOOR UNIT IS INSTALLED HIGHER THAN THE INDOOR UNIT (picture 2)

1. Taping should done from lower to upper part.
2. All pipes are bound and taped together and trapped the pipes to prevent water returning to the room. (see picture)
3. Restrain all pipes to the wall with saddles.

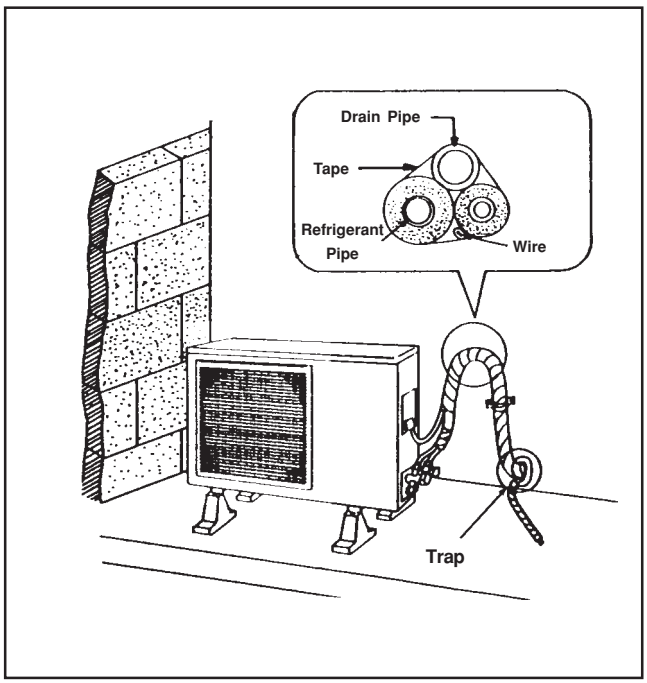

Picture 2

■ RUN TEST

- Check electrical main wire's voltage.
- Run the air conditioner for 15 minutes or more. Check the electrical current with ampmeter and compare with the specifications.

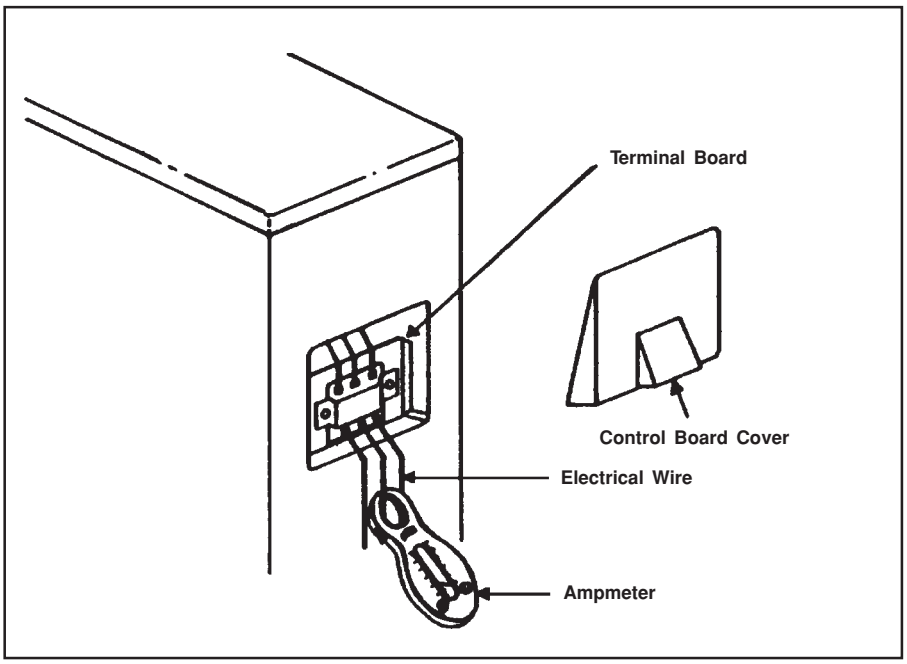

■ EVALUATION OF THE PERFORMANCE

- Use a thermometer to measure cool air both in and out.
- The difference between in-air and out-air temperature should not be less than 8 c.

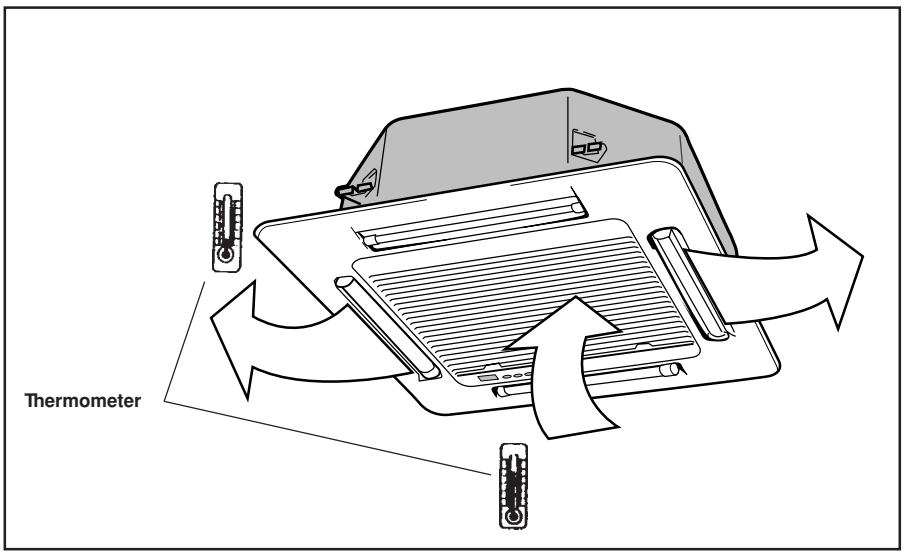

Klimaire Products, Inc.
7909 N.W. 54th Street
Miami, 33166 U.S.A.
Tel : (305)593- 8358
Fax : (305)593-8212
e-mail : klimaire@worldnet.att.net

NOTE: SPECIFICATIONS AND PERFORMANCE DATA LISTED HEREIN ARE SUBJECT TO CHANGE WITHOUT NOTICE