DRAWING NUMBER	A	B	C	D	F	G
DCMX01-001	4.595 - 4.795	.377 - .384	.430 - .500	1.278 MAX.	5.908 - 6.048	6.415 MAX.
DCMX01-002	5.878 - 6.078	.377 - .384	.430 - .500	1.663 MAX.	5.908 - 6.048	6.415 MAX.
DCMX01-004	5.878 - 6.078	.502 - .509	.430 - .500	1.663 MAX	6.889 - 7.029	7.396 MAX. (F)

(F)

DRAWING NO.
DCMX01 NO

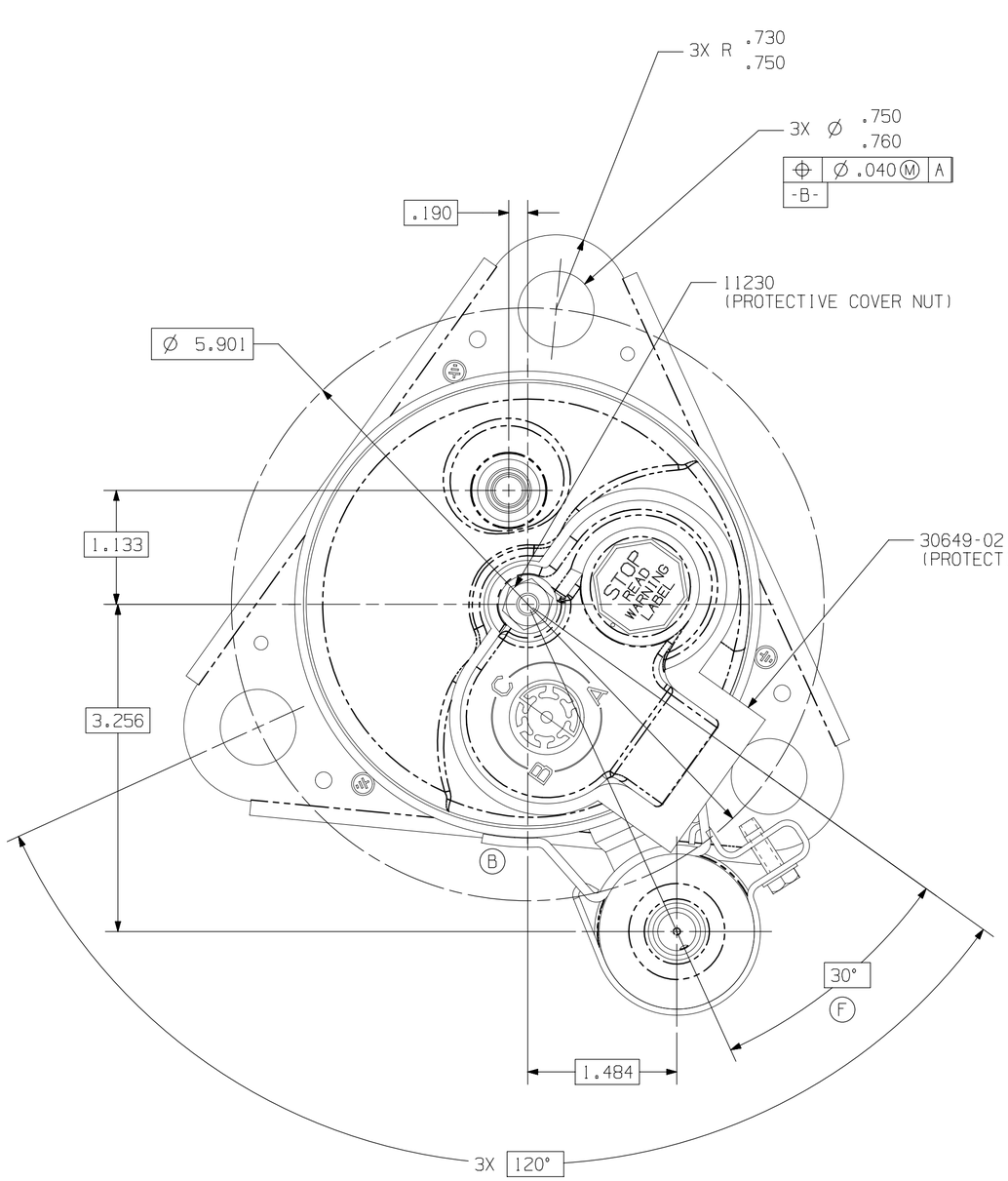

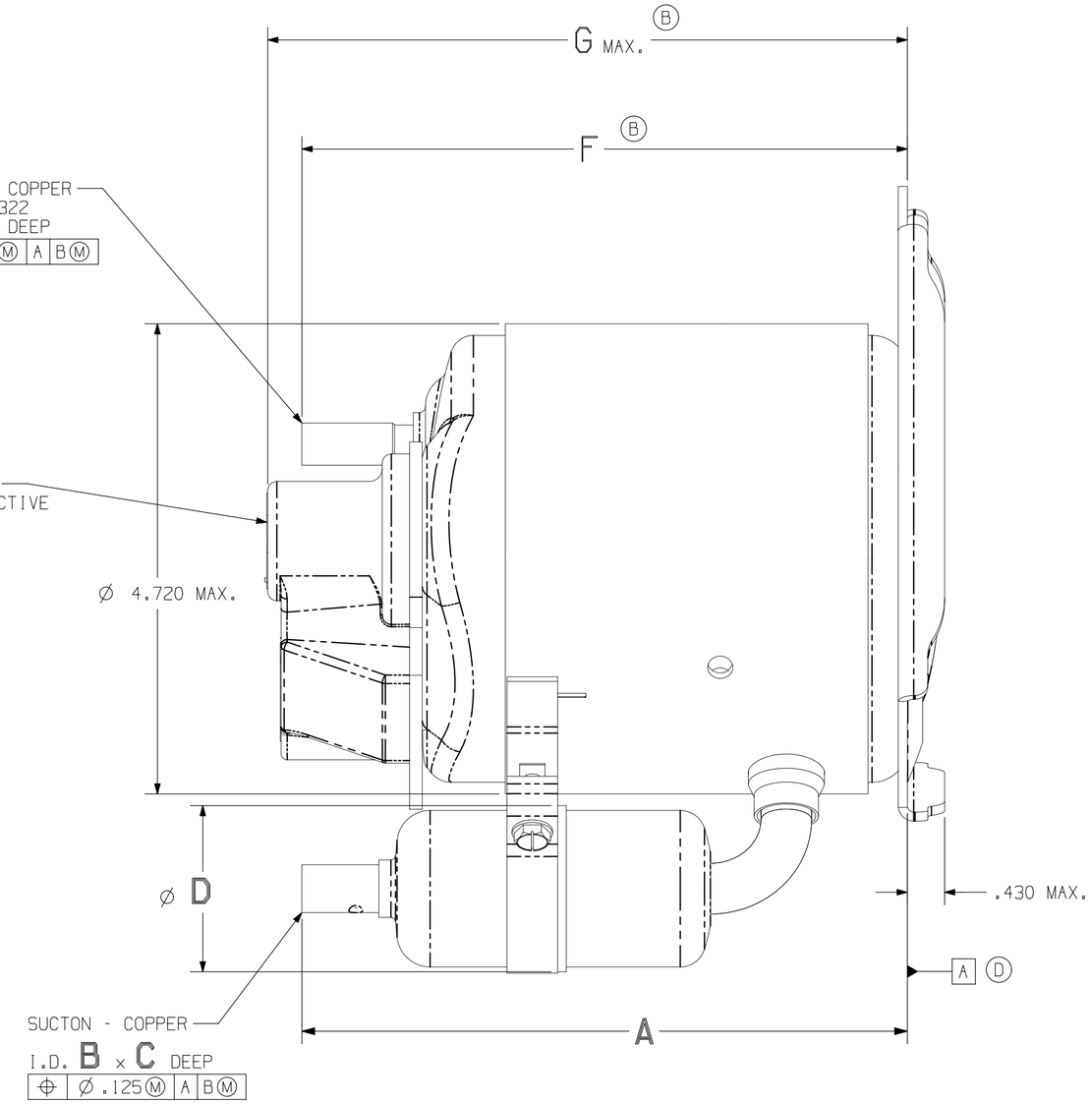

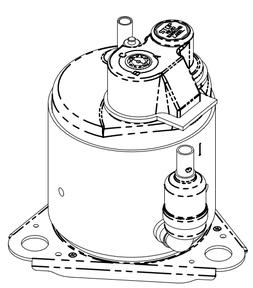

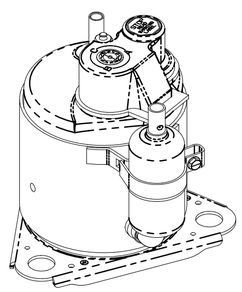

NOTE:

1. PROTECTIVE COVER GASKET, PROTECTIVE COVER, AND PROTECTIVE COVER NUT ASSEMBLED IF CALLED FOR ON BILL OF MATERIAL.

ENGLISH

Q.A. SYMBOLS
★ = CATEGORY I
▲ = CATEGORY II
■ = CATEGORY III
= CATEGORY IV

MASTERFLUX - SIERRA

G	#241186-174 OBSOLETED DMMX01-003 & REMOVED COLUMN "E" FROM CHART	DREEVES 05MAR04
F	#241186-170 REVISED DWG. TO SHOW NEW ACCUMULATOR GEOMETRY AND BRACKET	DREEVES 24FEB04
D	#241186-145 ADDED DATUM A	DREEVES 21OCT03
C	#241186-106 REVISED DWG.	A.S.C. 08APR03
B	#241186-062 REVISED DIMENSIONS AND CHART	REEVES 30JUL02
	UPDATED PROTECTIVE COVER	
A	#241186-039 REVISED DIM'S.	A.S.C. 02MAY02
REL	#241186-032	--
LT	CHANGE	DATE

THIS DRAWING OR PRINT (I) IS THE PROPERTY OF AND CONTAINS INFORMATION BELONGING TO MASTERFLUX. (II) MAY NOT BE DISCLOSED TO RECIPIENT ON THE EXPRESS AND IMPLIED UNDERSTANDING THAT RECIPIENT WILL NOT DISTRIBUTE OR OTHERWISE USE THE INFORMATION CONTAINED THEREIN OR DISCLOSED THEREIN SHALL BE KEPT CONFIDENTIAL AND NOT DISCLOSED TO OTHERS WITHOUT THE EXPRESS AND PRIOR WRITTEN CONSENT OF MASTERFLUX TECHMASH AND THAT SUCH INFORMATION SHALL BE USED ONLY FOR PURPOSES APPROVED IN WRITING BY MASTERFLUX AND NOT OTHERWISE. (III) SHALL NOT BE REPRODUCED IN ANY FORM OR MANNER OR TO ANY EXTENT WITHOUT THE PRIOR WRITTEN CONSENT AND SPECIFIC WRITTEN CONSENT AND (IV) THIS DOCUMENT MAY NOT BE LICENSED BY MASTERFLUX TO RECIPIENT UNLESS RECIPIENT HAS PROMPTLY AFTER LATTER'S REQUEST IS MADE.

DIS.CODE

DO NOT SCALE THIS DRAWING. ALL MATERIALS MUST NOT BE MAGNETIZED AS REQUIRED FOR A COMPRESSOR ASSEMBLY.

NAME: SALES COMPRESSOR

DWN.	CK.	APR.	SCALE
ASC 23APR02	ON FILE	ON FILE	1:1 & NOTED

THIS PRINT SUPERSEDES ALL PRINTS PRIOR TO

MASTERFLUX

MATERIAL: NOTED

DRAWING NO. DCMX01 NO

BANNER