Tennis for Two

Angel De La Cruz and John Ryan

Introduction

Before the advent of digital technology, computers were massive devices made from large arrays of vacuum tube amplifiers. By arranging discrete components around these amplifiers then stringing them together, they were able to quickly perform a wide variety of complex mathematical operations. These analog computers were used to solve complicated differential equations; they were commonly used by the military to calculate ballistic trajectories, taking into account variables like distance, air resistance, and even things like the coriolis effect. However, there were also some less serious uses for these computers. In 1958 at Brookhaven National Laboratory, William Higinbotham used an analog computer designed to calculate ballistic trajectories to built one of the world's first video games. It was called Tennis for Two, and the goal was to hit a ball back and forth on an oscilloscope screen that had a net drawn in the middle. It is our goal in this project to recreate this game using modern analog components.

System Overview

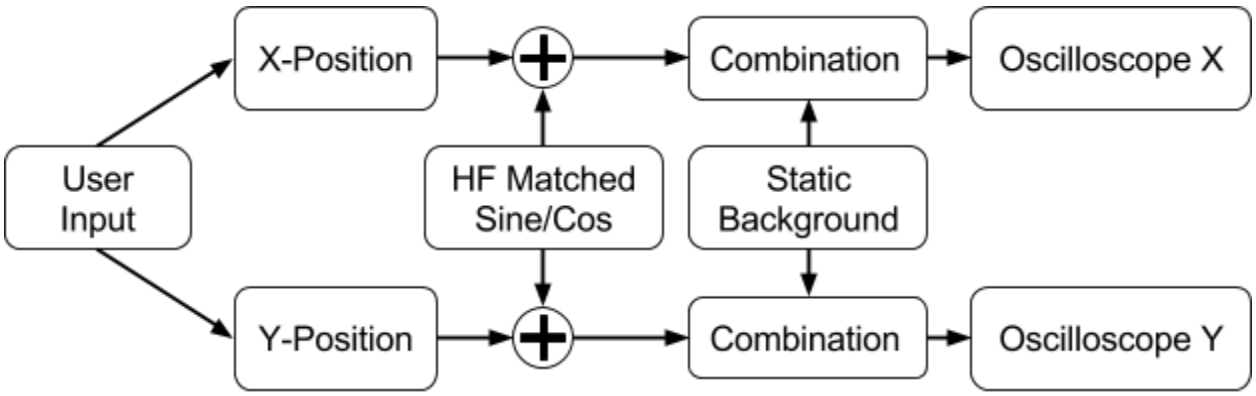

Figure 1: Tennis For Two. High Level Block Diagram showing the components of our implementation of the video game.

This project has two major parts. The first is building a reliable analog computer, and the second is creating a stable game display on an oscilloscope. The analog computer will separately calculate the x and y trajectories of the ball as it moves across the screen, handling its interactions with the boundaries of the stage and the net in the middle. The analog computer will take input from a pair of controllers which use a knob to control the direction that the ball is hit when a button on the controller is pressed. The analog computer will output a voltage level for the x and y coordinate of the ball to which a high frequency cosine and sine will be added respectively, to create a circle on

the oscilloscope screen. A separate circuit will generate the x and y waveforms for the static portions of the stage, i.e. the net and boundaries. This will be combined with the waveform of the ball and sent to the scope and allow players to see the game. The entire system will be designed to run off a ±15V power supply and should only need op-amps and discrete components available in the lab.

Analog Computer (John Ryan)

To calculate the movement of the ball with simulated gravity, we will need an analog computer to solve the parabolic movement in the y direction, and the linear movement back and forth in the x direction. To calculate the x position of the ball, we will need to generate a triangle wave with a slope that varies each time it changes direction, according to the angle determined by the player. To do this we will switch between driving a capacitor with a voltage controlled current source or sink based on user input. By pushing/pulling current at a constant rate, the voltage across the capacitor will vary linearly at a rate proportional to the current. The strength of the current source/sink will be adjusted by a voltage determined by a potentiometer in the controller used by the player. The capacitor will also be connected to a few comparators, which will trigger a switch when the ball reflects off of the boundaries of the stage. By measuring the voltage across the capacitor, we should be able to generate a voltage level between 0 and ~15V which we can project across the entirety of the oscilloscope screen.

In order to calculate the y position, we will use a pair of inverting op-amp integrators, arranged in the same fashion as the analog computers of the 50's. The first integrator will receive a step input, which will result in a linear ramp at the input of the second, which will then generate a quadratic curve at its output. The speed of the ball when it is hit will again be pulled from the potentiometer in the controller held by the player; by making the magnitude of the step input proportional to the voltage from the controller, we will be able to adjust the initial speed when the ball is hit. There will be a significant amount of fine tuning necessary to determine the component values and voltage levels needed to get reasonable velocities and acceleration. The output for the y position will be a voltage measured from the output of the integrator, however the exact voltage levels are not yet known, as they will have to be set carefully to prevent the op-amps from saturating.

One final stage is necessary before the output of the analog computer can be passed to the oscilloscope circuitry, and that is the addition of matched high frequency sine and cosine to the voltage levels. To generate the two sinusoids we will use a quadrature oscillator. A quadrature generator in effect puts an op amp designed to introduce 90° phase shift in the feedback path of another op amp. By then taking the voltage from the output of each op amp, we are able to get a matched sine and cosine

pair. By adjusting component values, and filtering out high frequency noise, we can adjust the frequency at which the system resonates to whatever value we want. These two functions are then summed with the voltage output of the x and y position, allowing us to display a small ball on the scope screen.

Oscilloscope Display (Angel De La Cruz)

The display circuitry will take as input the output from the analog computer module and output a pair of voltages to an oscilloscope in X-Y mode that will trace out the tennis court and ball. The analog circuitry will have to serve two basic functions: it will create our static tennis court and it will integrate the tennis court with the ball that comes from the analog computer module, creating a complete display.

The tennis court will be made up of a long horizontal line to represent the floor, and a short vertical line at the center to represent the net. The way we have chosen to implement this static court is by having a high frequency wave in the x-coordinate output voltage represent the floor and synchronize it with a delta function in the y-coordinate output voltage that will create the vertical line for the net. While this is a pretty straight forward implementation, it will likely take a significant amount of fine tuning to get the synchronization right.

One of the biggest challenges that will come from this project is that there is a lot to display and at any given moment in time, the oscilloscope is only given an X-Y coordinate in the form of two voltages. While we still haven't settled on a exactly how we're going to execute the combining of the ball with the static court, we have a preliminary idea of switching the outputs from displaying the ball to displaying the court at a high enough frequency that to the human eye it's all one solid display.

Conclusion

Our main objective is to get a functioning recreation of the Tennis for Two game like the one William Higinbotham designed almost 60 years ago. There are many challenges that we anticipate encountering prior to getting a working video game, but with the knowledge we've gained from 6.101thus far, we believe we'll be able to have success. One unique challenge that we may encounter, is that although we have divided the project into two modules, there may be an inherent dependence between them, making it difficult to test and debug them independently. If time permits, we also hope to expand on the work of Higinbotham. The game he created has very little structure; the only rule is that the ball has to be on a player's side of the court in order for them to be able to hit it. We hope to be able to add a bit more structure such as limiting a player's ability to hit the ball more than once consecutively or implementing a scoring system.