Capacitive 2-D Piano

Corey Cleveland and Eric Ponce

Overview

- Use a capacitive touch enabled grid to generate x-y touch position
- Feed the information into a tone generator with multiple frequencies
- Output the sound using a Class AB amplifier

Block Diagram

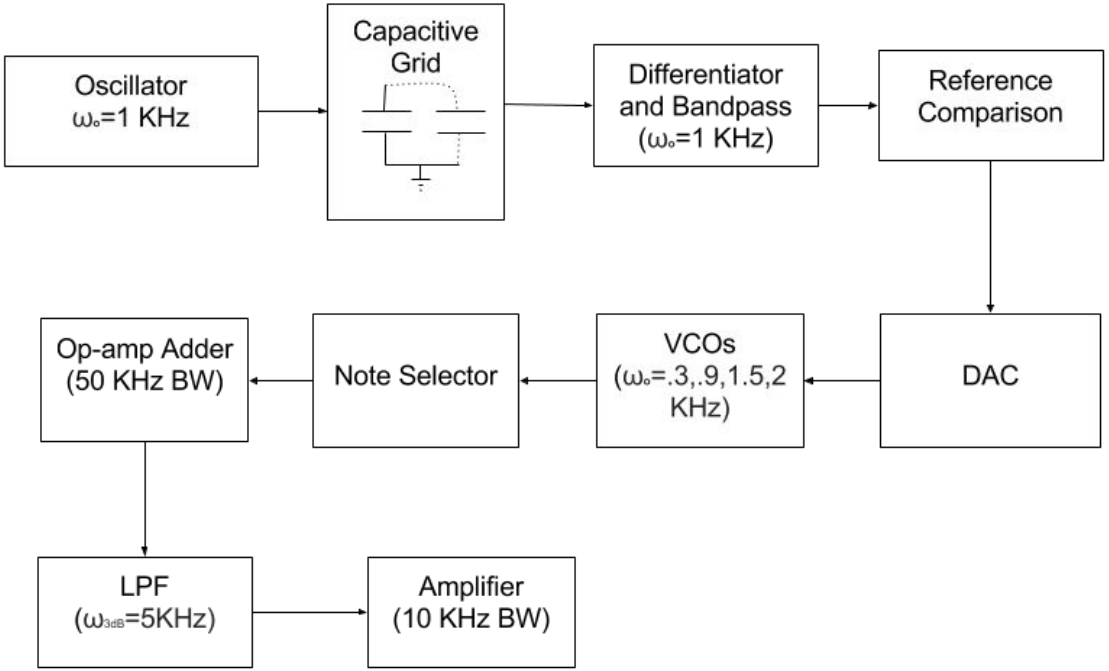

Block Diagram

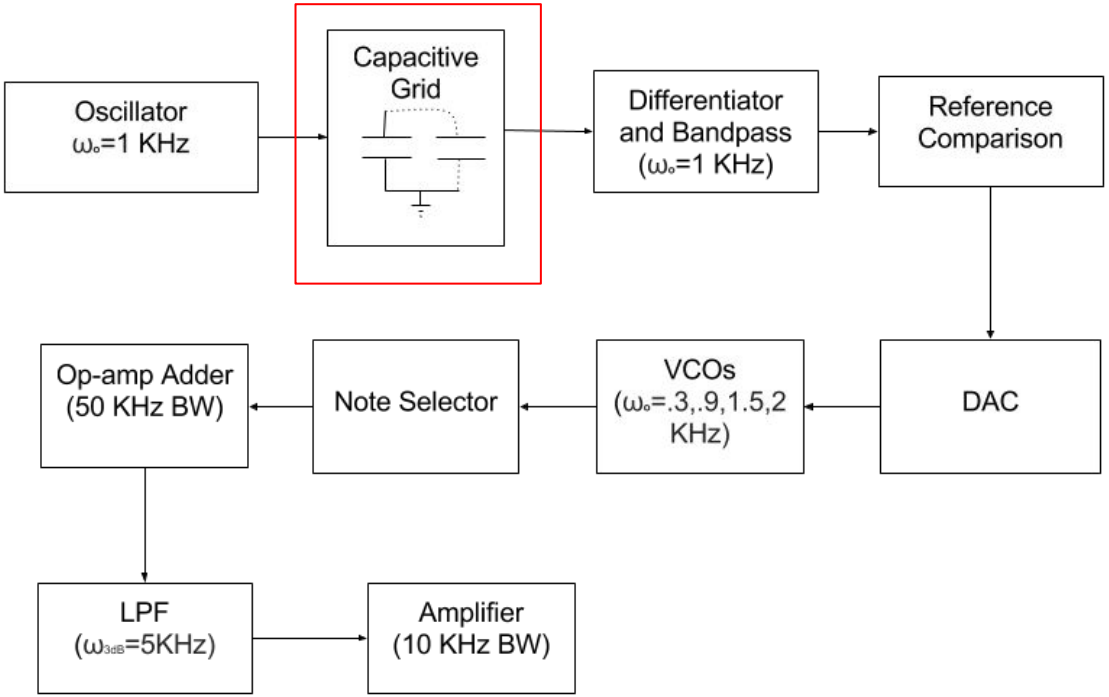

Capacitive Touch Sensor (Physical Construction)

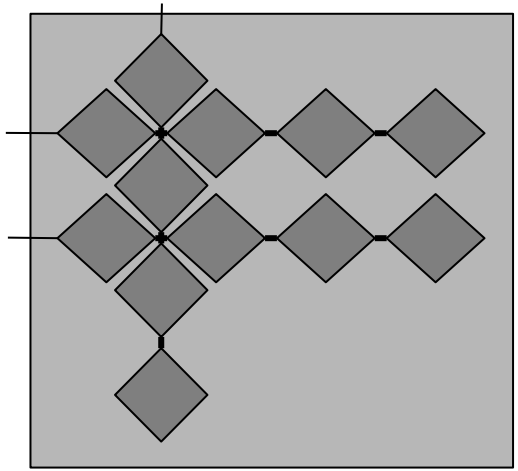

- Single sided copper clad board
- Rows and columns formed by copper tape
- Geometry minimizes capacitance between rows and columns
- Test pad measured a capacitance of ~3pF with human touch roughly doubling the capacitance

Block Diagram

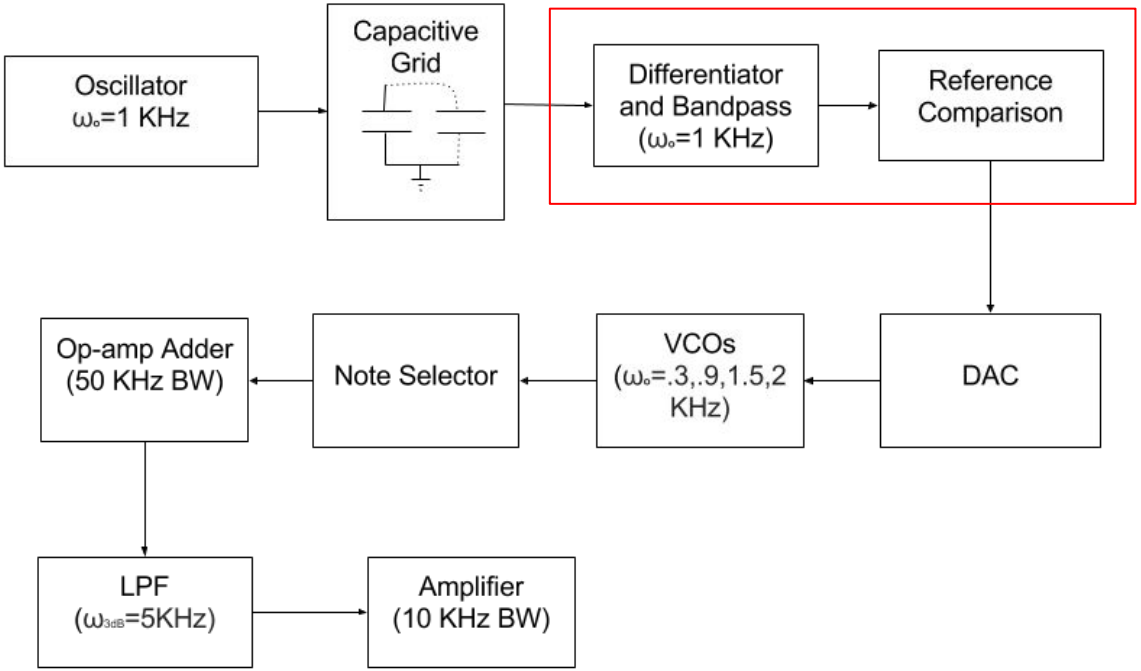

Capacitive Touch Sensor (Sensing Circuitry)

- Signal passes through differentiator with transfer function $H(j\omega) = R1*C1*j\omega$
- Output passed through bandpass filter (ω=~1 KHz) and notch filter (60Hz) to eliminate coupled noise.
- Peak detector measures output peak and compares with reference voltage using LM311

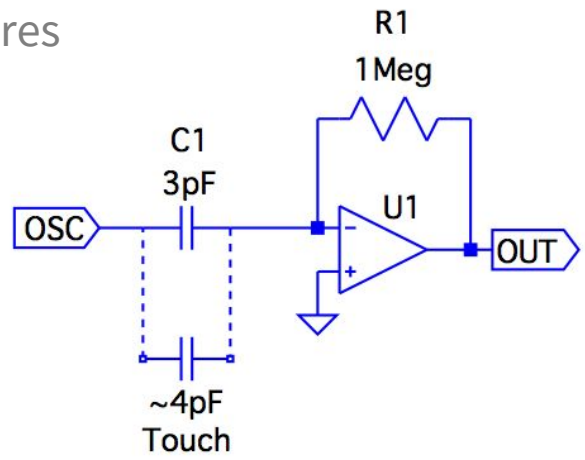

Block Diagram

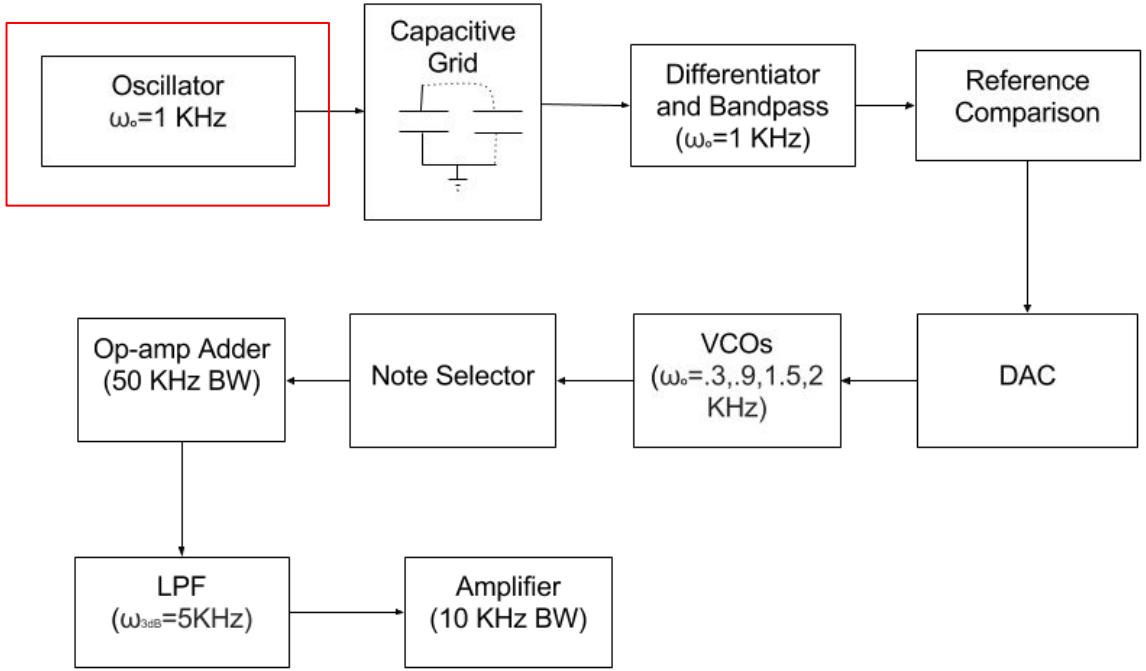

Capacitive Sense Input Oscillator

- Phase shift oscillator at ~1 kHz

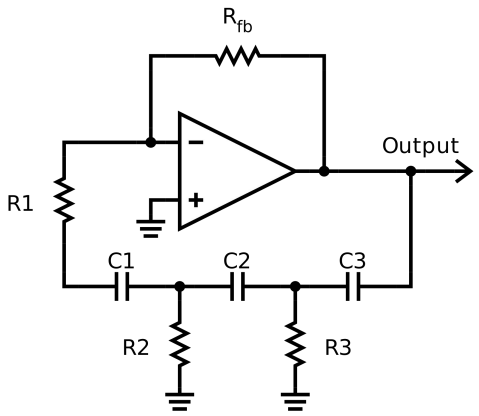

Block Diagram

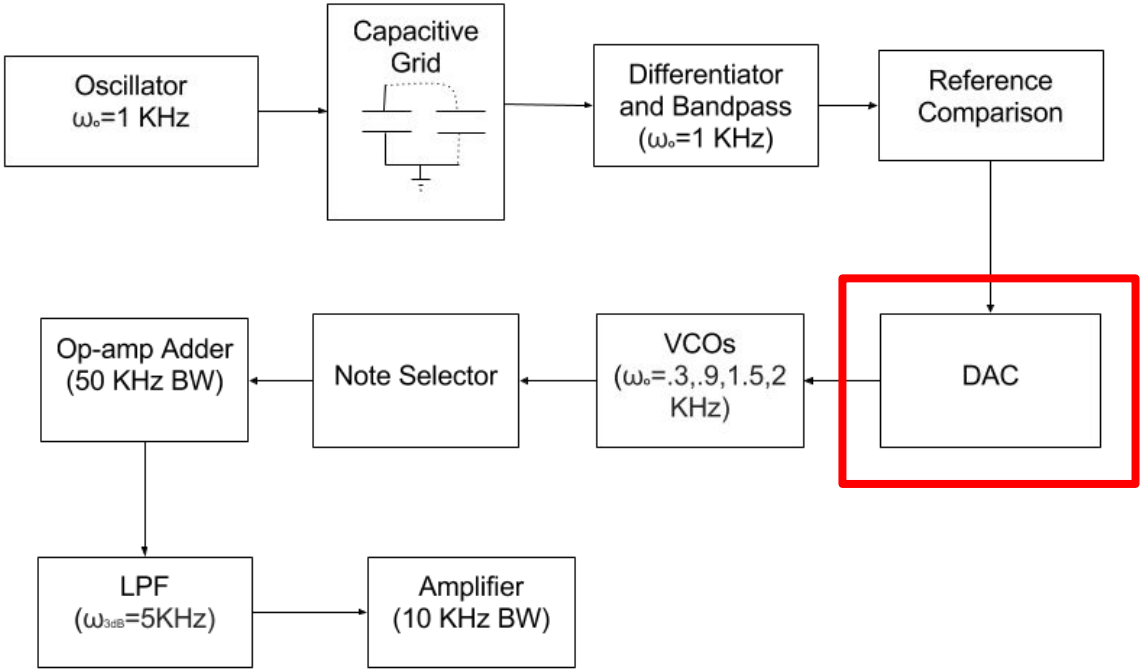

DAC

- Capacitive Sensor produces on-off signal for each row and column
- R-2R ladder combines signals to create analog voltage centered at VCO bias

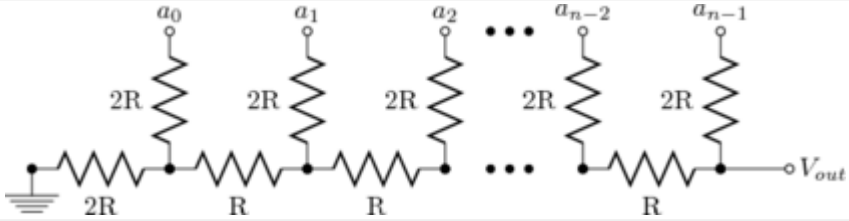

Voltage Controlled Oscillator

- Output from the DAC controls the output frequency.
- Schmitt trigger uses capacitor voltage to switch mosfet and cause a drain/charge cycle
- Bandwidth of 500Hz
- Low pass filtering of output triangle wave

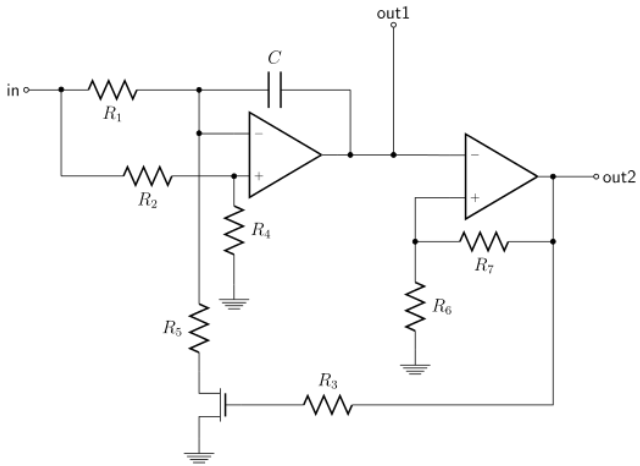

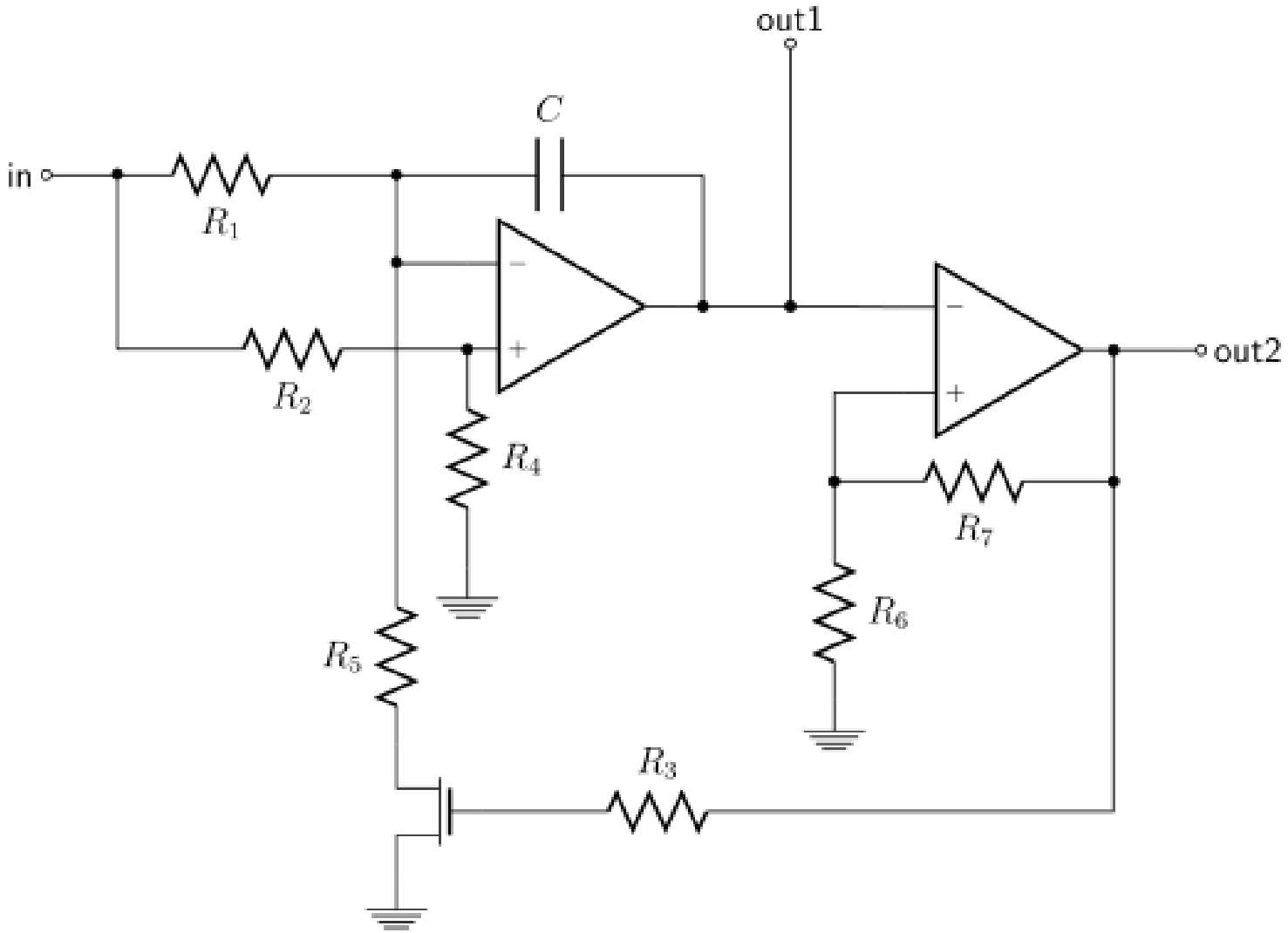
out1
C
in
R_1
R_2
R_4
R_5
R_3
R_6
R_7
out2

Block Diagram

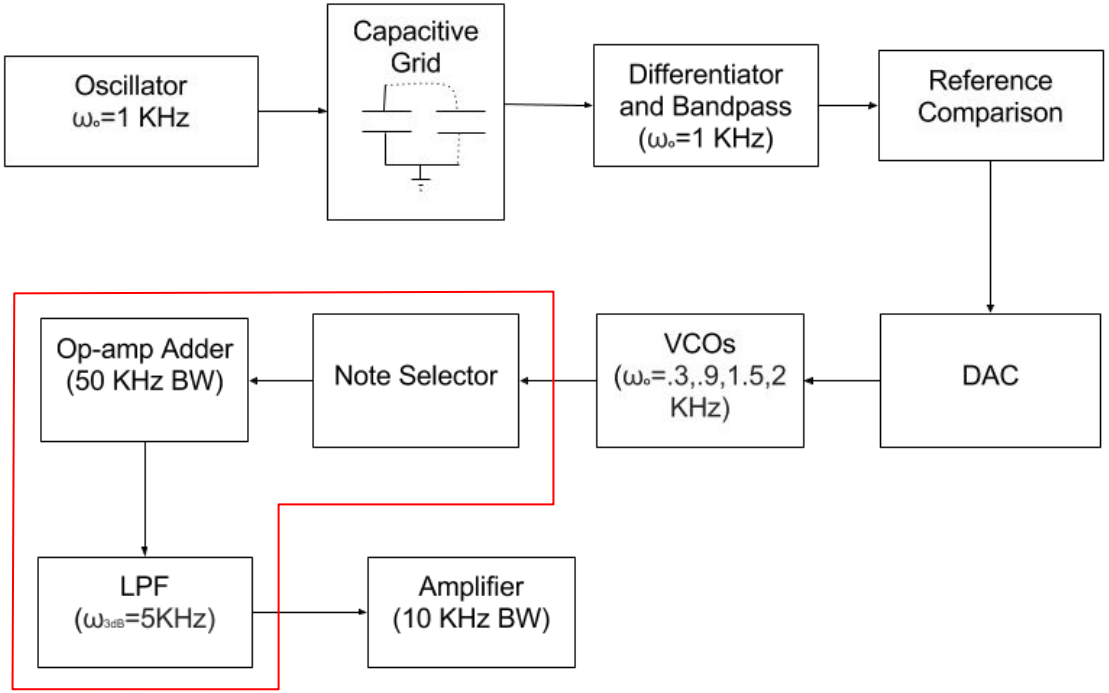

Note Selector

- Turn off signal from VCOs that are not activated
- Uses digital signal from reference comparison

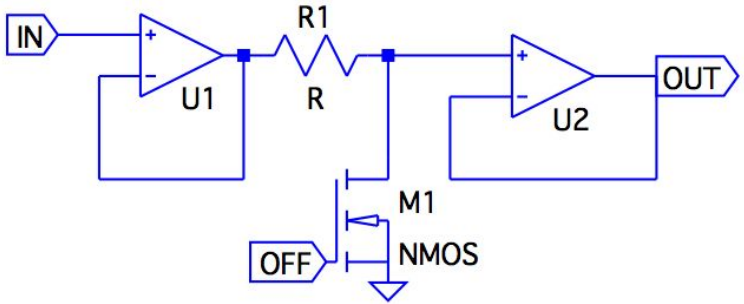

Low Pass Filter and Op Amp Adder

- Low Pass Filter to reduce distortion
- AB amplifier to power speaker

Timeline

Week of	Task
April 11	Test Single Capacitive Pad (Eric) Design and Test VCOs (Corey)
April 18	Build and Test Capacitive Grid (Eric) Build Note Selector and all VCOs (Corey)
April 25	Integrate and Debug (Both) Stretch Goals (Both)
May 2	Stretch Goals and Present

Challenges

- Measuring small capacitance changes
- Grid construction (row/column asymmetry)
- Cross talk between grid lines
- Sensitivity of Voltage Controlled Oscillator

Stretch Goals

- Adding optional distortion/amplitude control to output audio signal
- Adding “light show” in addition to tone generation
- PCB design