Engineering an Anthropomorphic Exoskeleton for Actively Controlled Space Suit Simulation

Forrest Meyen

Qualifying Exam Research Presentation
January 28, 2012

Professor Dava Newman
Advisor

Project is a Collaboration of Aurora Flight Sciences and
the MIT Man Vehicle Laboratory

Funded by NASA and the National Science Foundation

Testing and Training for Human Exploration

2005 Mars Simulation (Credit Jessica Marquez)

NASA eZLS (Perusek et al. 2007)

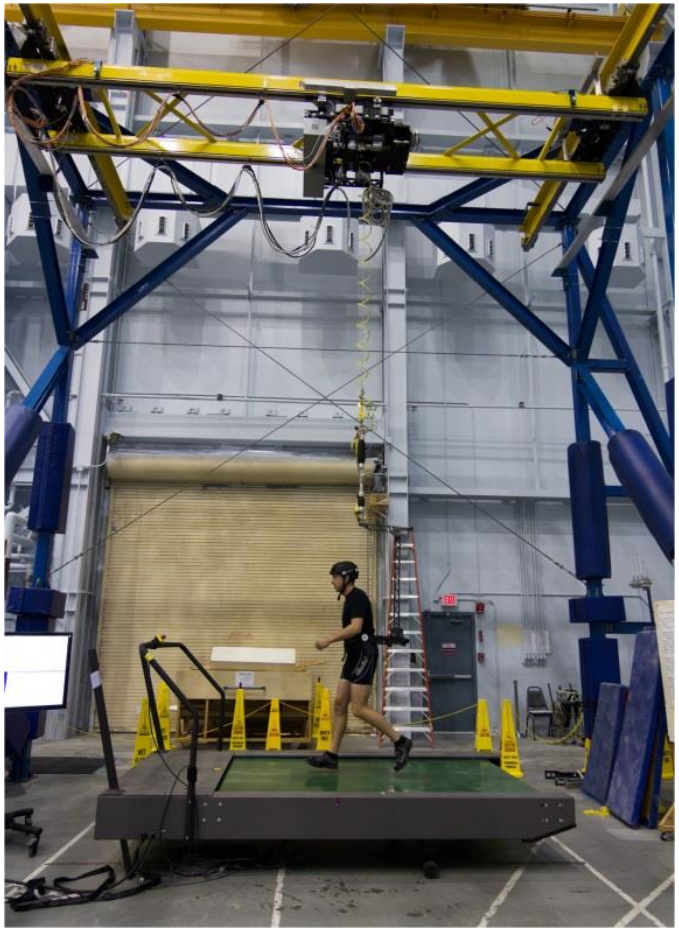

NASA ARGOS (NASA)

Introduction

Space suits impose resistive torques to joint motion

- Due to joint volume, pressure, and structural effects[1]
- Nearly 30 N-m Torque during EMU knee flexion
- Joint torques affect EVA performance, consumables, and fatigue

Why not just use a real suit?

- EMU weight 125 kg (275 lb) [2]
- Cost $12 million[3]
- Access
- Pressurization
- Environment (Dust, abrasion)

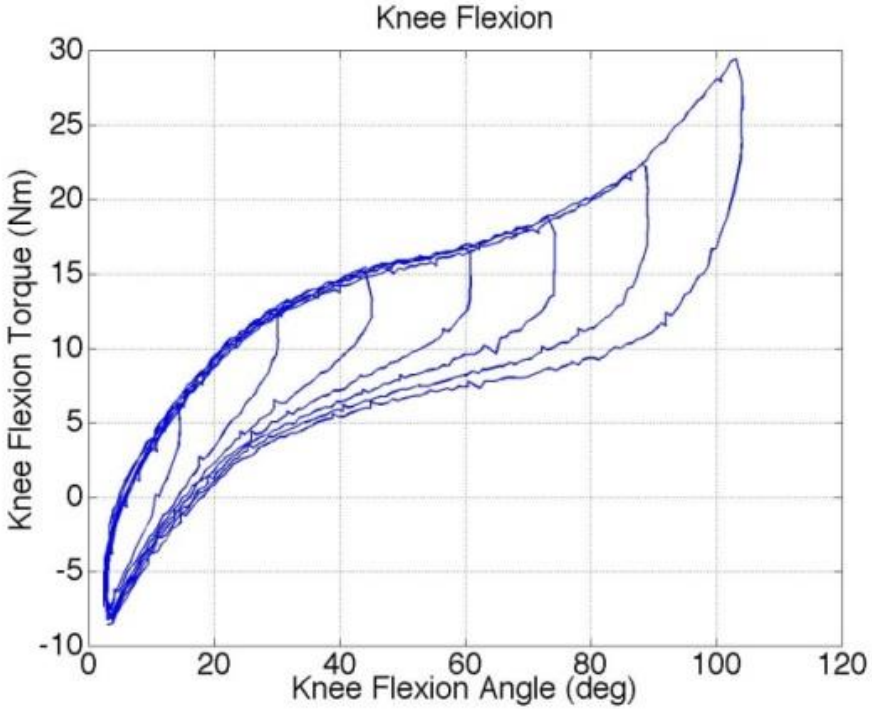

Schmidt (2001)

(NASA)

1. Holschuh 2009, 2. Thomas and McMann, 2006, 3. Freudenrich 2013

Proposed Solution

Hypothesis

- A programmable exoskeleton using pneumatically powered actuators can effectively simulate space suit joint torque profiles.

Objective

- Build a pneumatically powered exoskeleton that can actively vary resistance to hip, knee, and ankle motions.

Success Criteria

- Match each joint to EMU joint torque data within a RMS error of 10% for the hip, knee, and ankle joints.

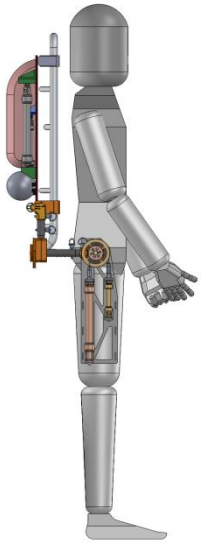

Exoskeleton Design

Robotic Space Suit Tester

Exoskeleton Hip and Pack

The State of the Art

Assistance
Rehabilitation
Augmentation
Simulation

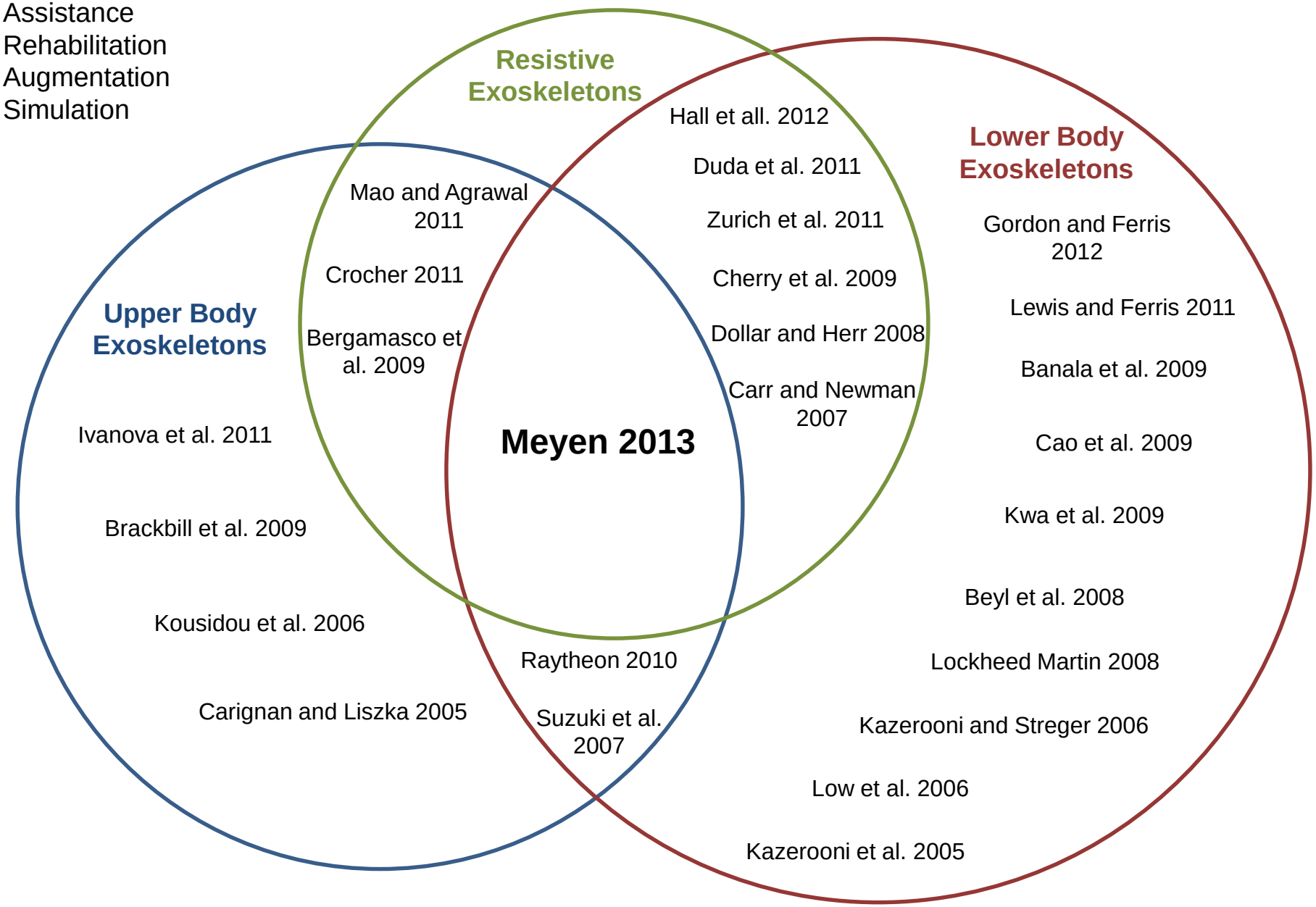

The State of the Art

Assistance
Rehabilitation
Augmentation
Simulation

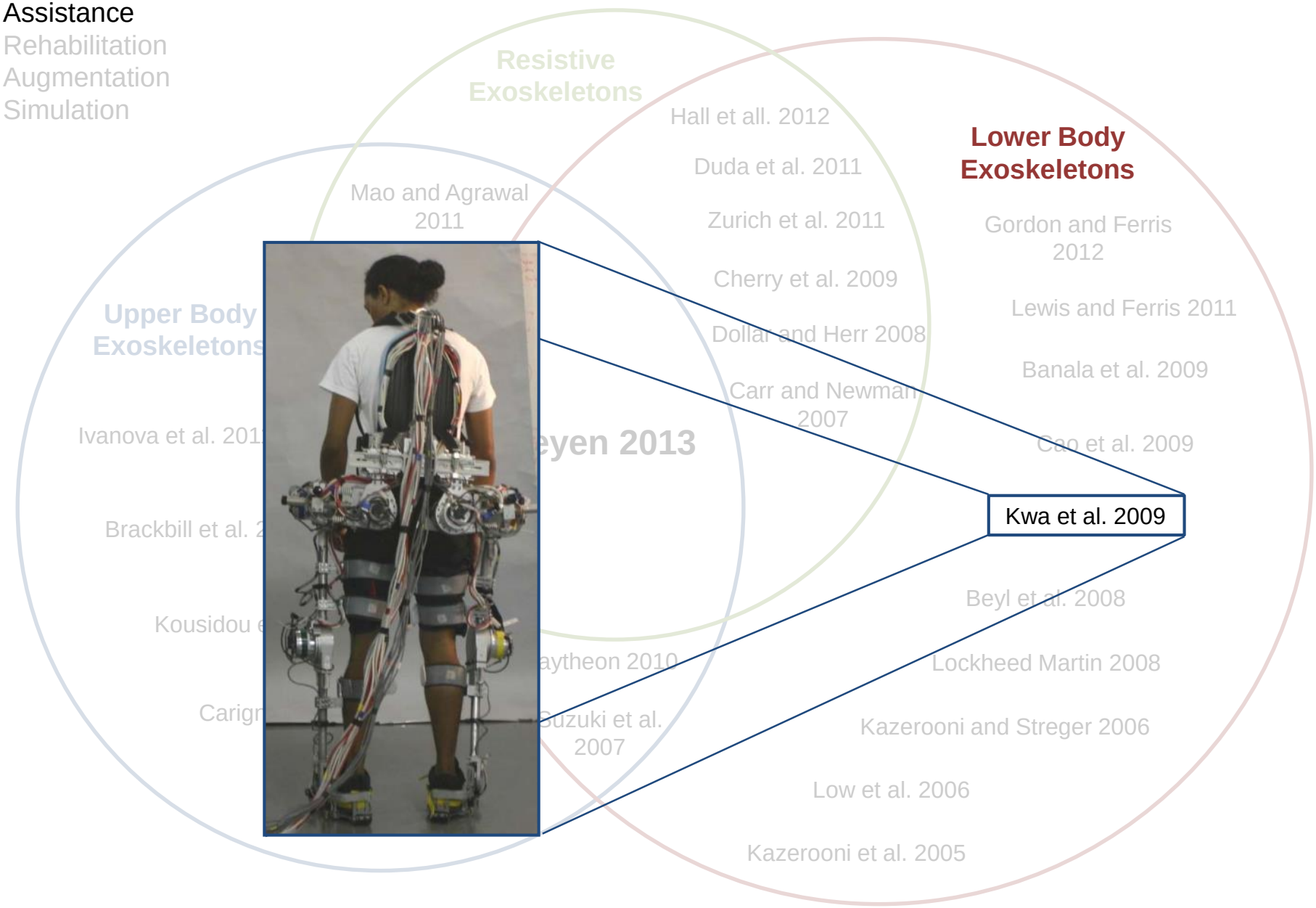

The State of the Art

Assistance
Rehabilitation
Augmentation
Simulation

Resistive Exoskeletons

Hall et all. 2012

Duda et al. 2011

Zurich et al. 2011

Crocher 2011

Bergamasco et al. 2009

Meyen 201

Raytheon 201

Suzuki et al 2007

Lower Body Exoskeletons

Gordon and Ferris 2012

Low et al. 2006

Kazerooni et al. 2005

Upper Body Exoskeletons

Ivanova et al. 2011

Brackbill et al. 2009

Kousidou et al. 2006

Carignan and Liszka 2005

Mao and Agrawal 2011

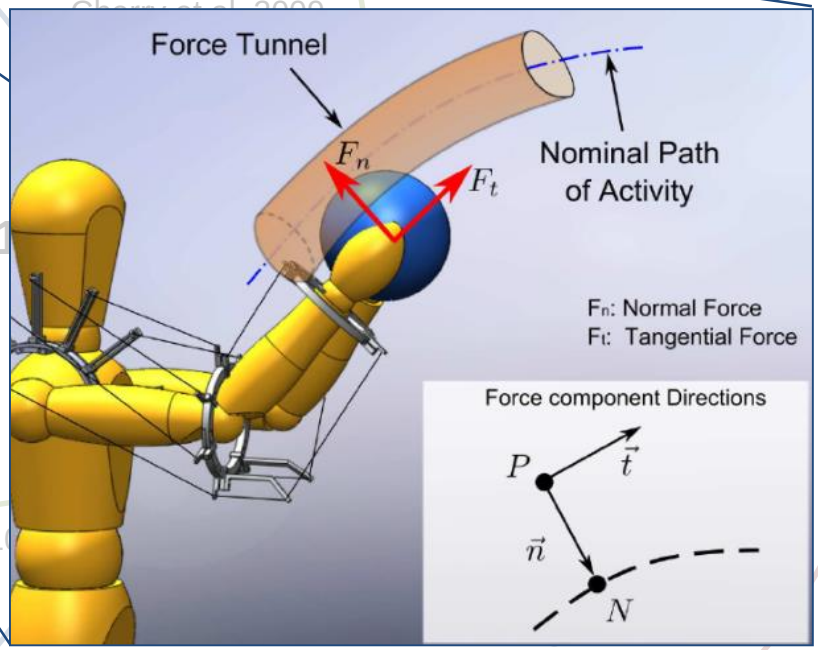

The State of the Art

Assistance
Rehabilitation
Augmentation
Simulation

Upper Body Exoskeletons

Ivanova et al. 2011

Brackbill et al. 2009

Kousidou et al. 2006

Carignan and Liszka 2005

Mao and Agrawal 2011

Crocher 2011

Bergamasco et al. 2009

Meyen 2013

Hall et all. 2012

Duda et al. 2011

Zurich et al. 2011

Cherry et al. 2009

Dollar a

Carr a

Raytheon 2010

Suzuki et al. 2007

Kaze

Lower Body Exoskeletons

Gordon and Ferris 2012

011

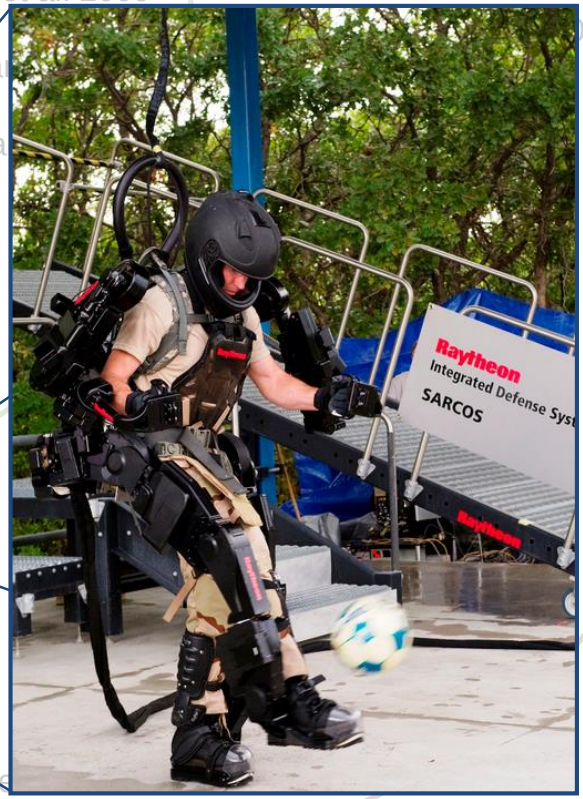

The State of the Art

Assistance
Rehabilitation
Augmentation
Simulation

Resistive Exoskeletons

Hall et all. 2012

Duda et al. 2011

Zurich et al. 2011

Cherry et al. 2009

Dollar and Herr 2008

Mao and Agrawal 2011

Lower Body Exoskeletons

Gordon and Ferris 2012

Lewis and Ferris 2011

Banala et al. 2009

Cao et al. 2009

Kwa et al. 2009

Beyl et al. 2008

Lockheed Martin 2008

Kazerooni and Streger 2006

Low et al. 2006

Kazerooni et al. 2005

Carr and Newman 2007

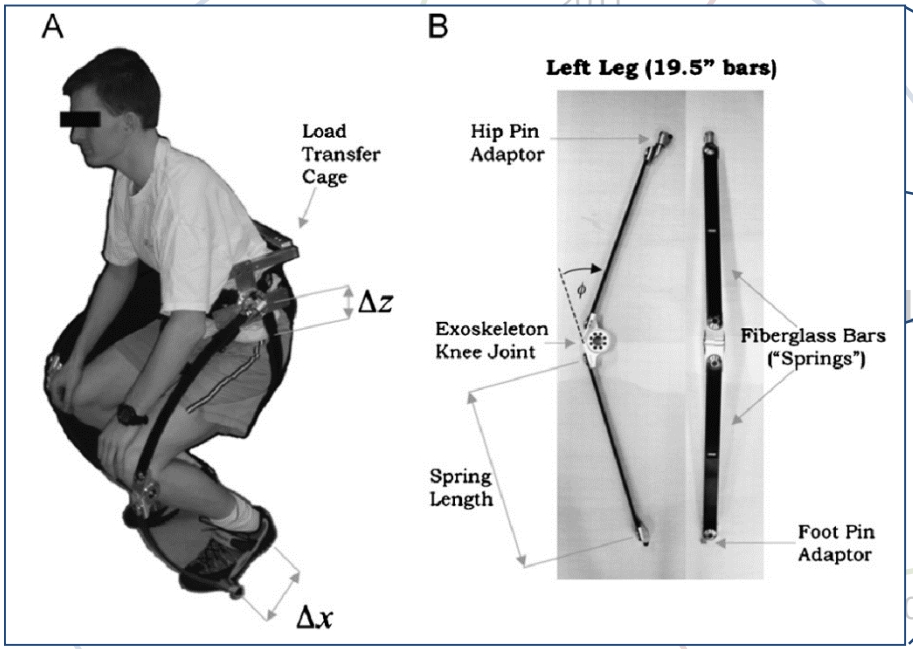

Carignan and Liszka 2005

Suzuki et al. 2007

The State of the Art

Assistance
Rehabilitation
Augmentation
Simulation

Resistive Exoskeletons

Hall et all. 2012

Duda et al. 2011

Mao and Agrawal 2011

Zurich et al. 2011

Crocher 2011

Cherry et al. 2009

Lower Body Exoskeletons

Gordon and Ferris 2012

Ferris 2011

al. 2009

l. 2009

009

008

06

Kazerooni et al. 2005

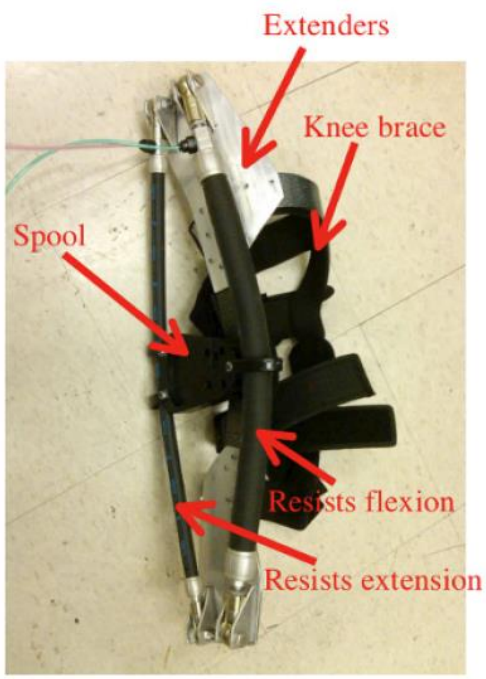

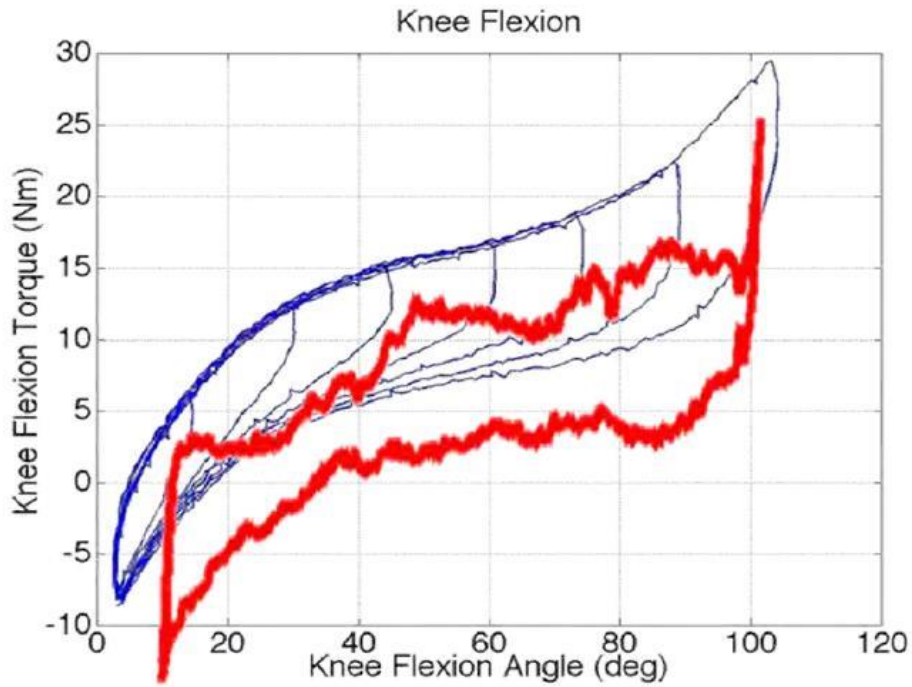

The State of the Art

Assistance
Rehabilitation
Augmentation
Simulation

Resistive Exoskeletons

Mao and Agrawal 2011

Crocher 2011

Bergamasco et al. 2009

Upper Body Exoskeletons

Ivanova et al. 2011

Hall et all. 2012

Duda et al. 2011

Zurich et al. 2011

Cherry et al. 2009

Dollar and Herr 2008

Carr and Newman 2007

Lower Body Exoskeletons

Gordon and Ferris 2012

Lewis and Ferris 2011

Banala et al. 2009

Cao et al. 2009

Meyen 2013

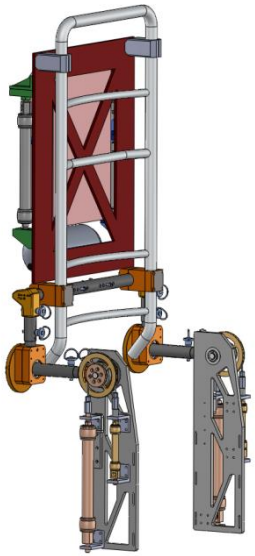

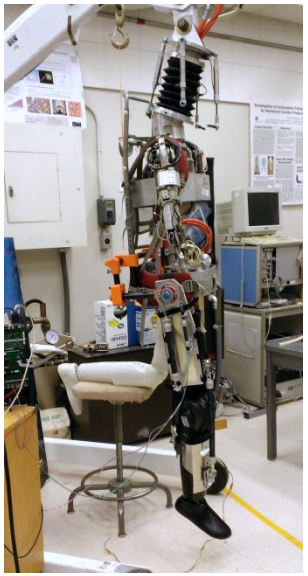

Torque Transmission

Flexion/Extension

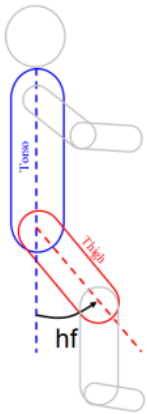

Straight torque to moment arm (Straight)

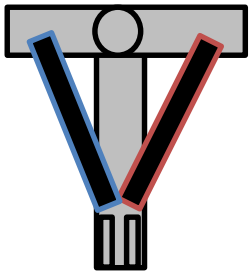

Advantages
Simple design
Disadvantages
Changing moment arm
Guiderails needed
Hard to protect actuators

Actuator bent around a spool (Bent)

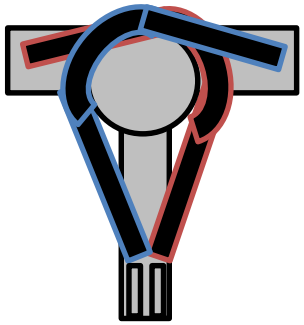

Advantages
Large actuator contraction
Generates large forces
Leverage body shape (knee)
Disadvantages
Increase bulk (hip)
Guiderails needed
Selected for knee

Actuating spool mounted cables (Cable)

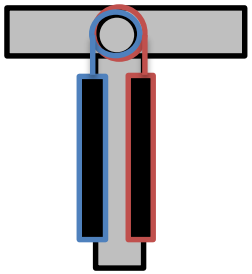

Advantages
Very adjustable
Can use spools or cams
Lowest form factor
Slide rails not needed
Disadvantages
Require more parts (spools)
Selected for hip

Abduction/Adduction

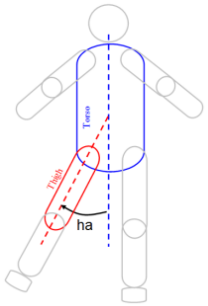

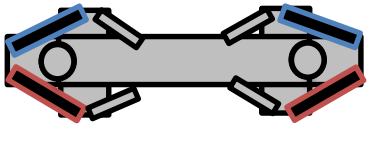

Example

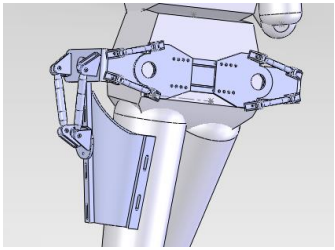

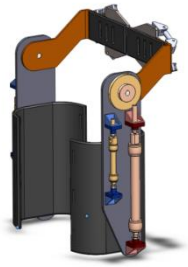

Actuator Sizing

Hip Range of motion requirements

- Derived from space suit torque database
- Actuator 1 Requirements
  - ROM of 20°
  - Max torque of 28 N-m
- Actuator 2 Requirements
  - ROM of 120°
  - Max. Torque of 31 N-m

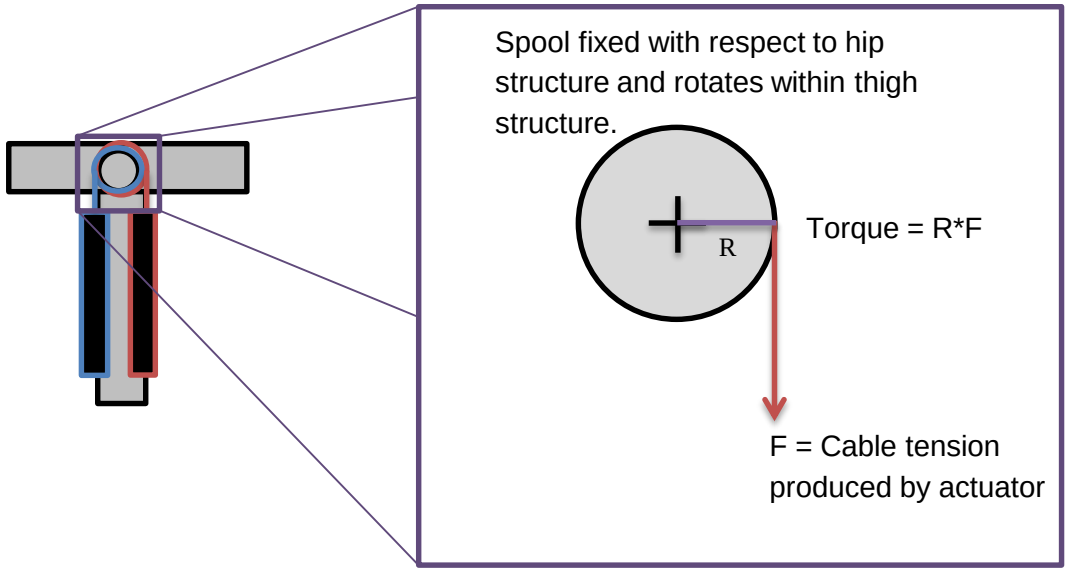

- Minimizes actuator weight (cost function)
- Constraints
  - Torque
  - Range of motion
  - Spool shear stress
- Revised to minimize actuator length

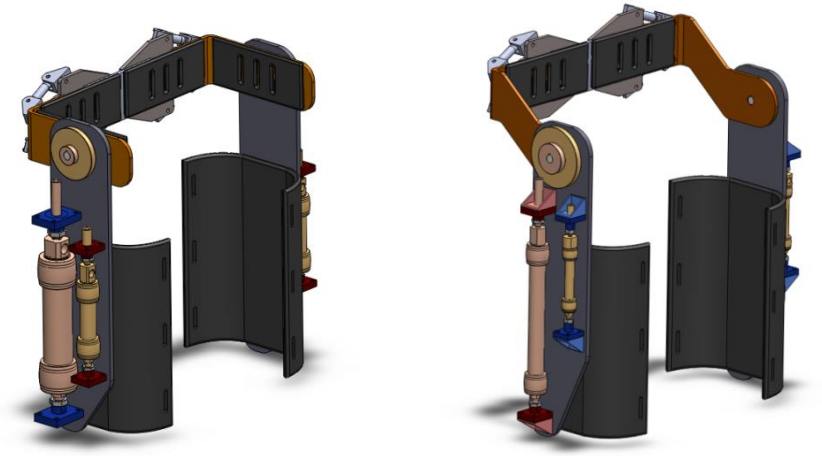

Potential actuator and spool size options

Torque Transmission

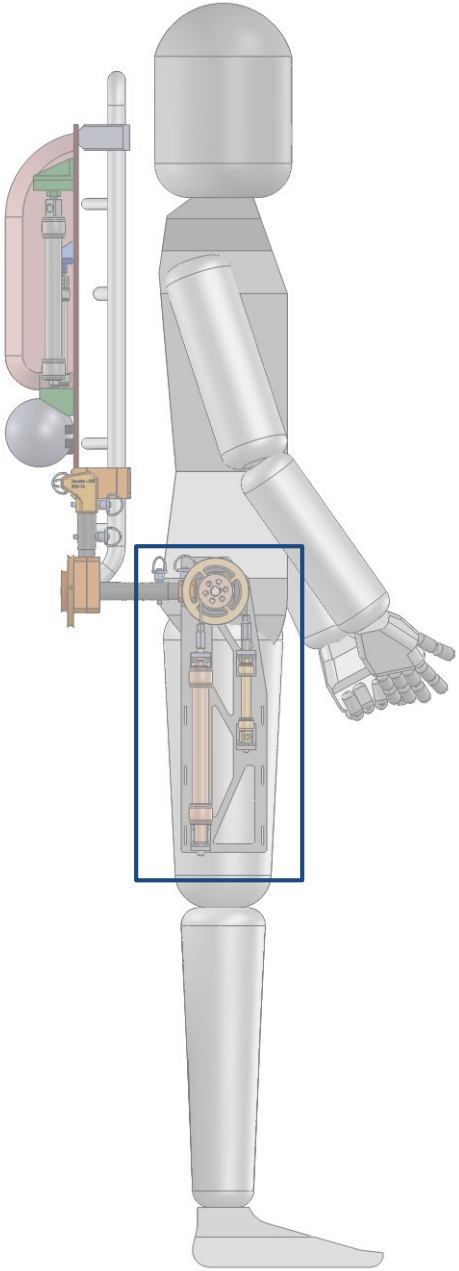

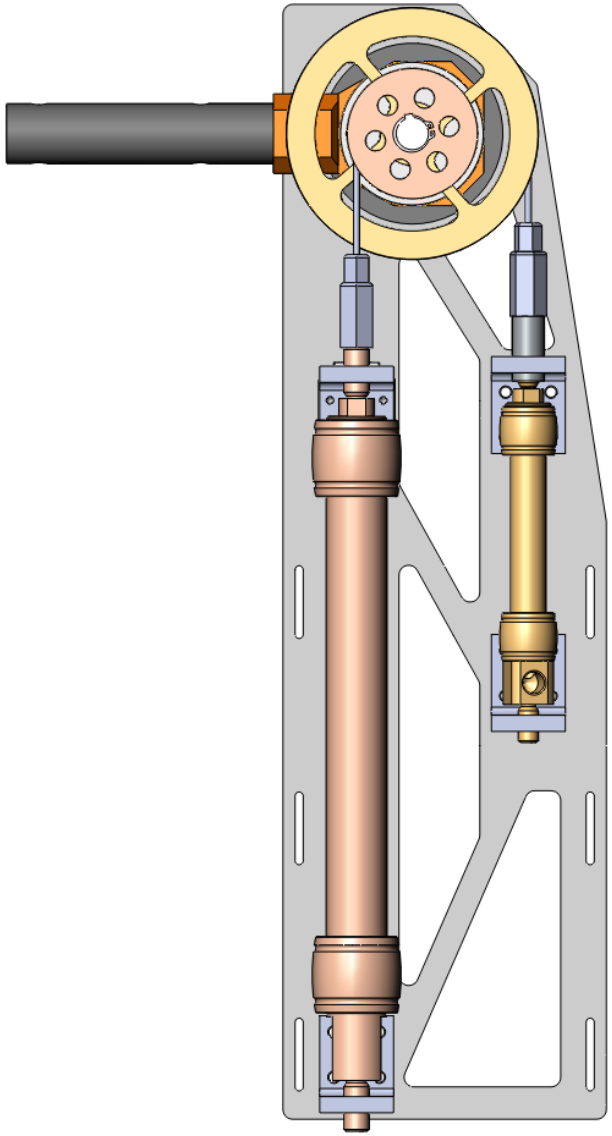

- Actuator size optimized for directions independently
- Actuators create cable tension that results in spool torque
- Cam and single spool designs also considered

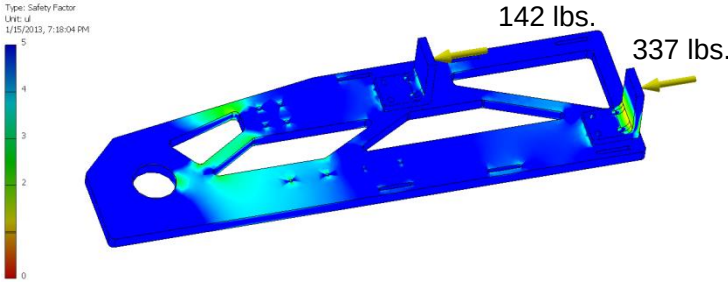

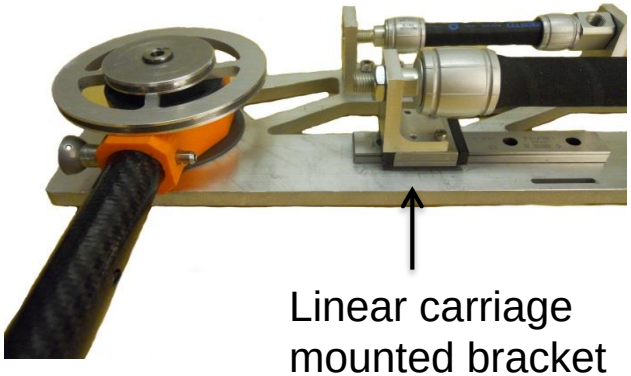

Linear carriage mounted bracket allows motion

Torque Transmission

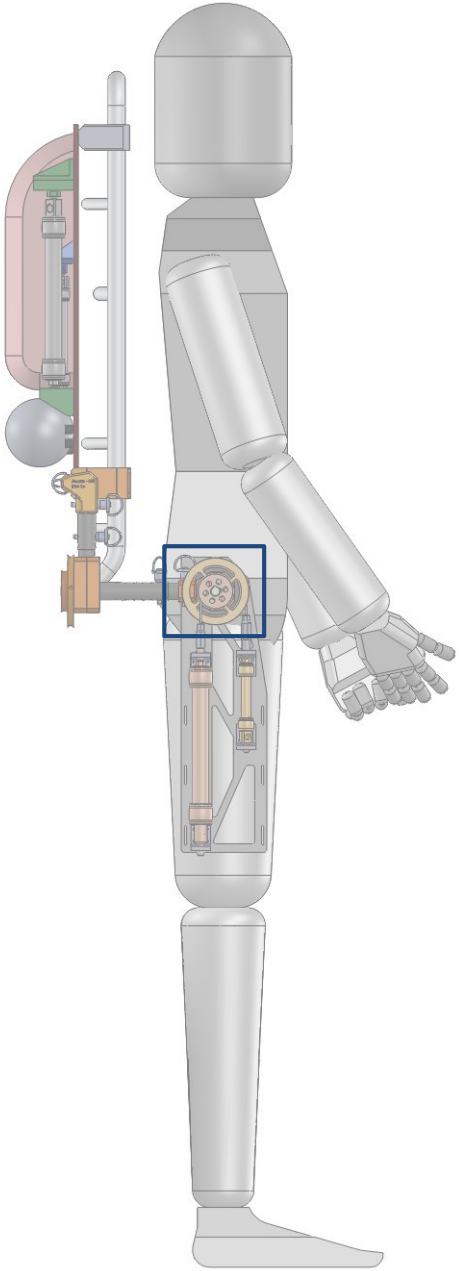

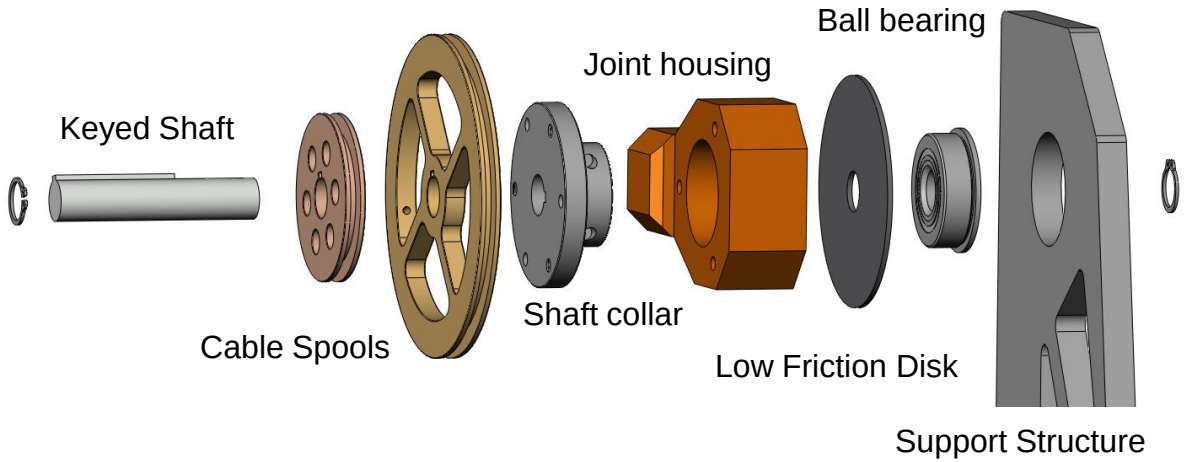

- Actuator size optimized for directions independently
- Actuators create cable tension that results in spool torque
- Cam and single spool designs also considered
- Snap rings for quick assembly and disassembly
- 1.8 Factor of Safety

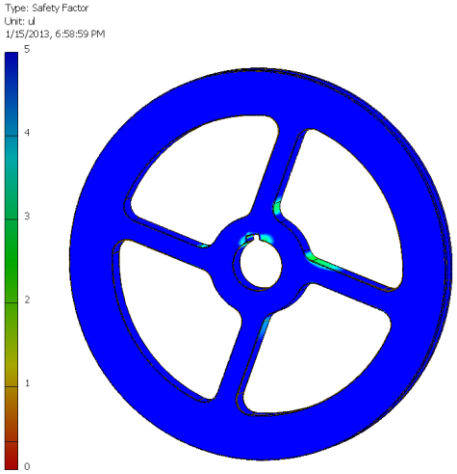

Fitting the Human Operator

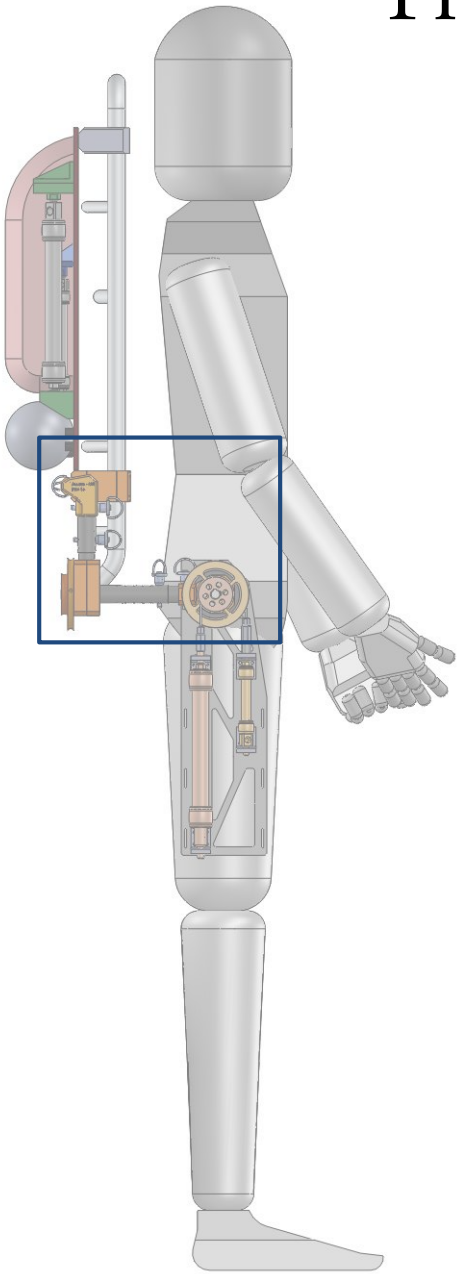

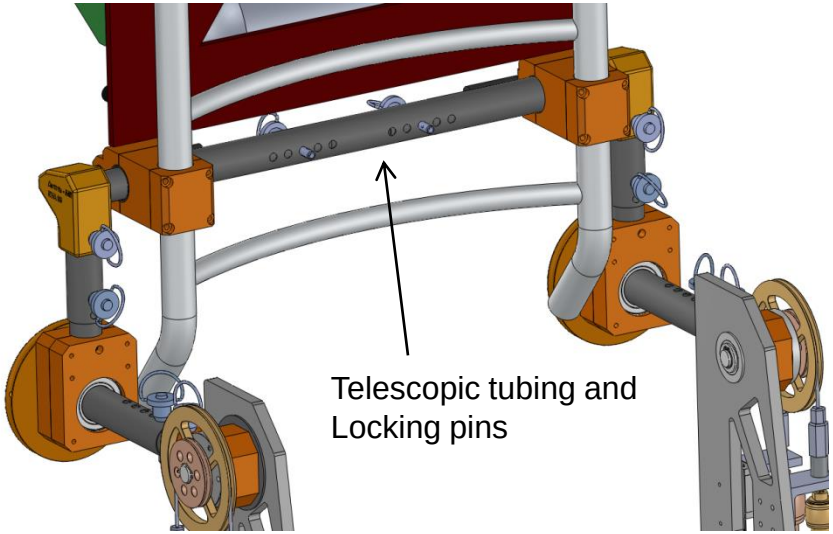

- Sizing NASA Standard 3000
- Fit to 5% female to 95% male
- Telescopic tubing for quick size adjustments
- Adjustable straps for leg girth
- External frame backpack used for support adjusts similarly
- Bearings allow for hip rotation, flexion/extension, and abduction/adduction
- Push button locking pins are used for fast size modification

Final Hip Joint Design

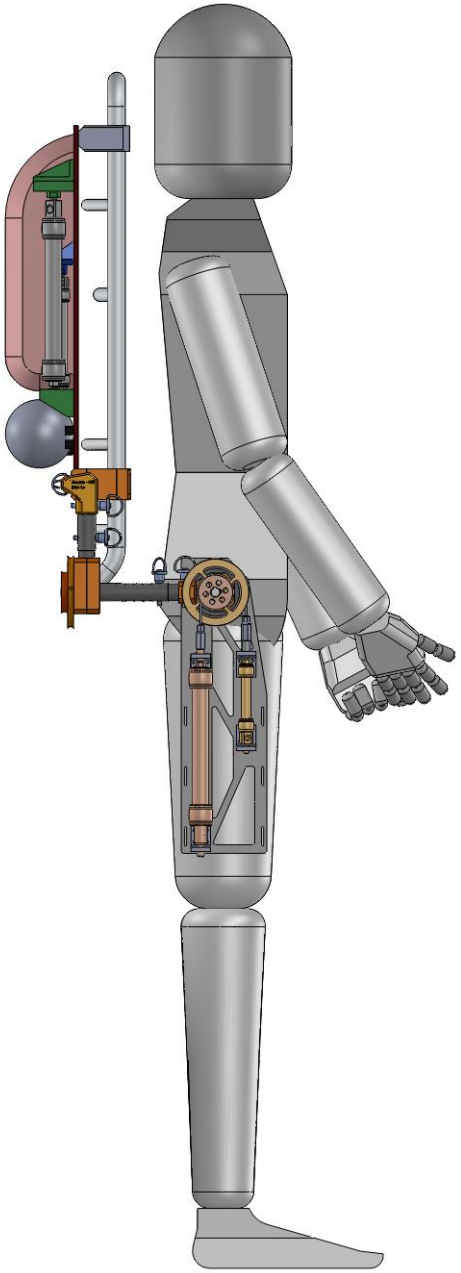

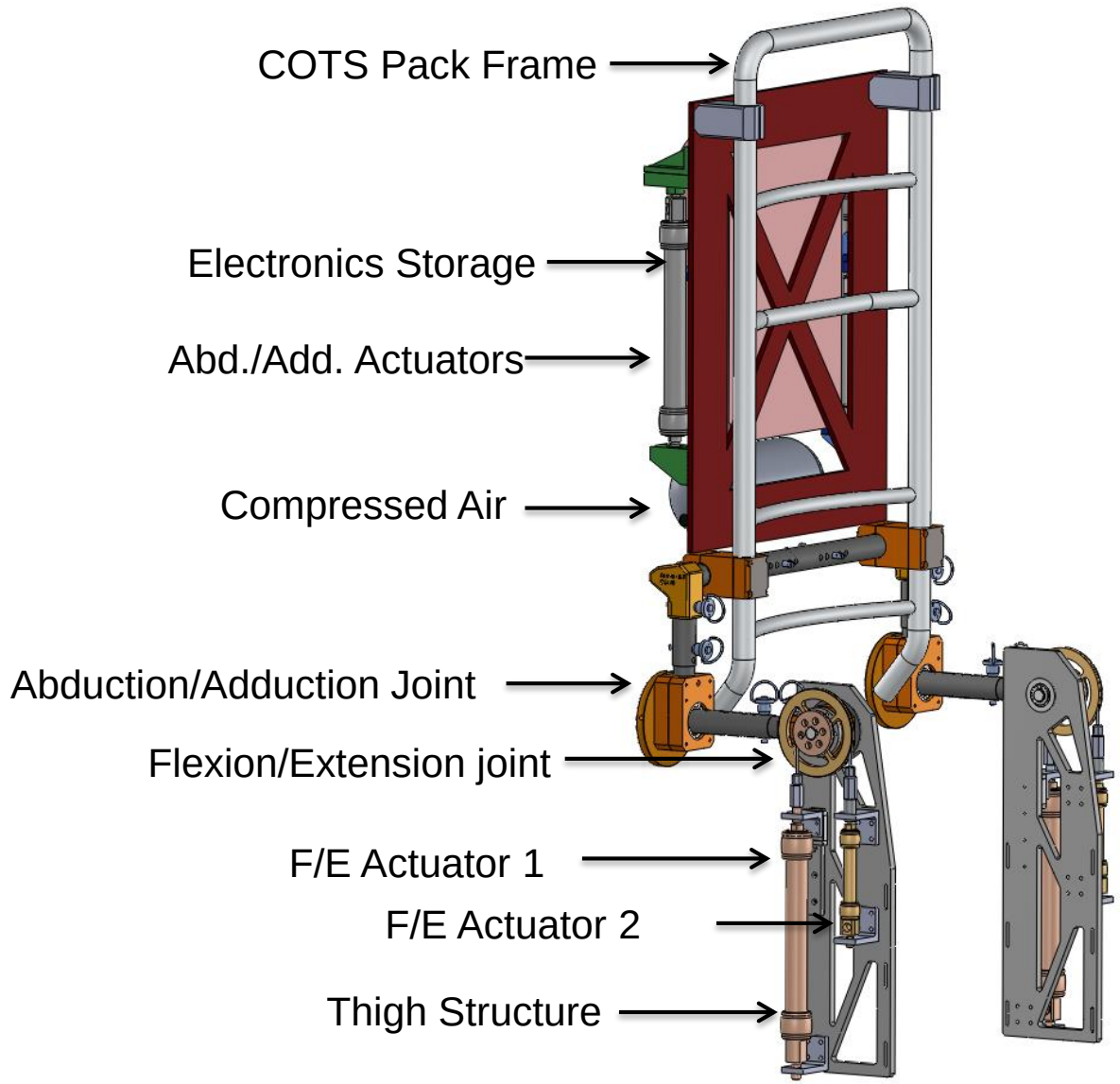

Ankle and Knee Joint Designs

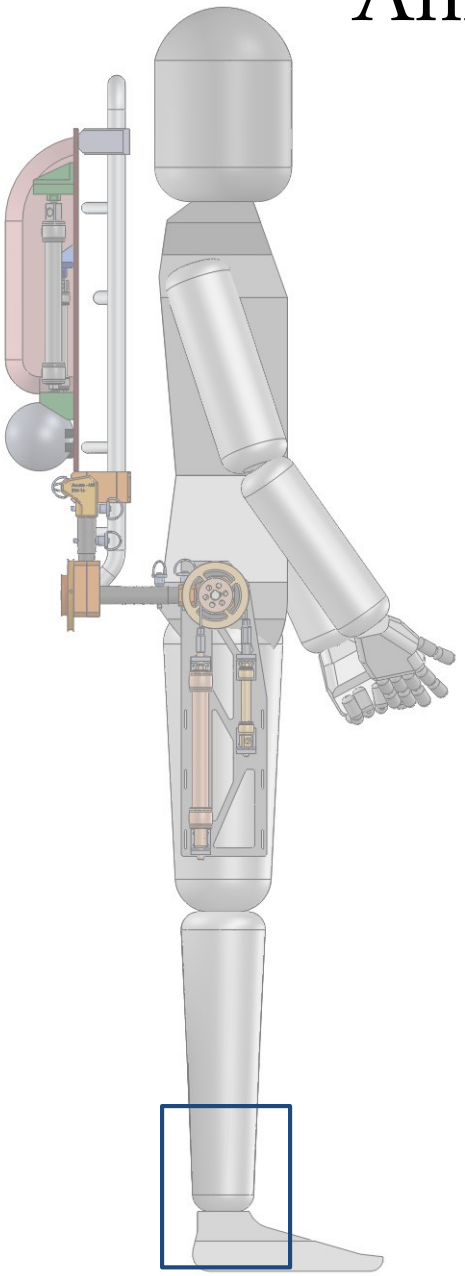

Ankle Prototype

Knee and ankle joints also in development

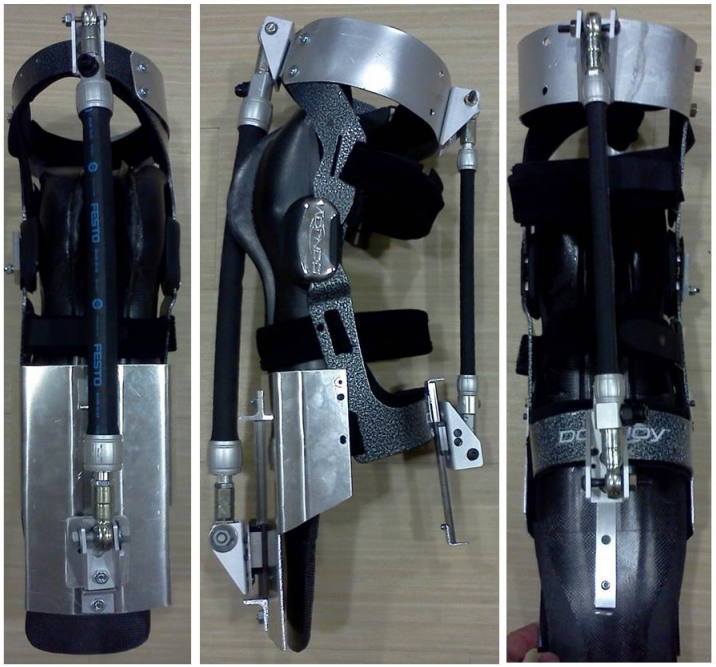

Knee Prototype

Control System

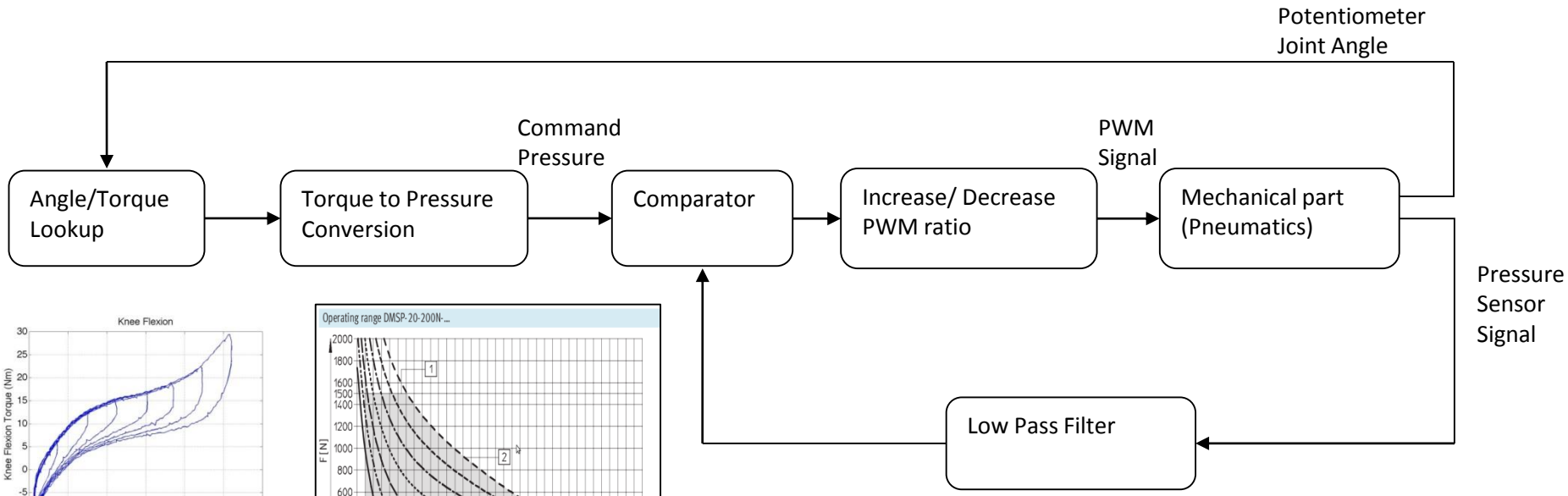

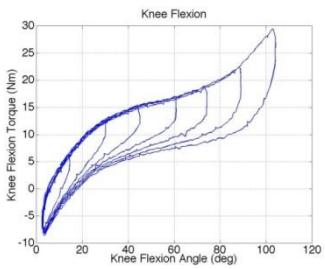

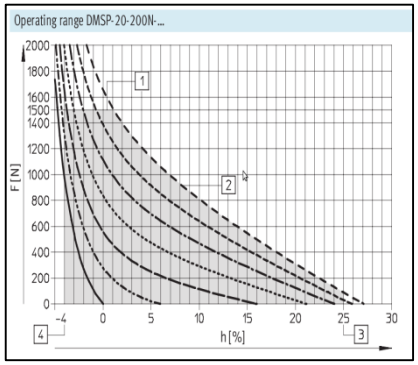

- Proportional Controller
- Potentiometers provide joint location and movement direction
- A lookup table determines the appropriate joint torque for the current space suit
- Pressure is adjusted to meet that torque value

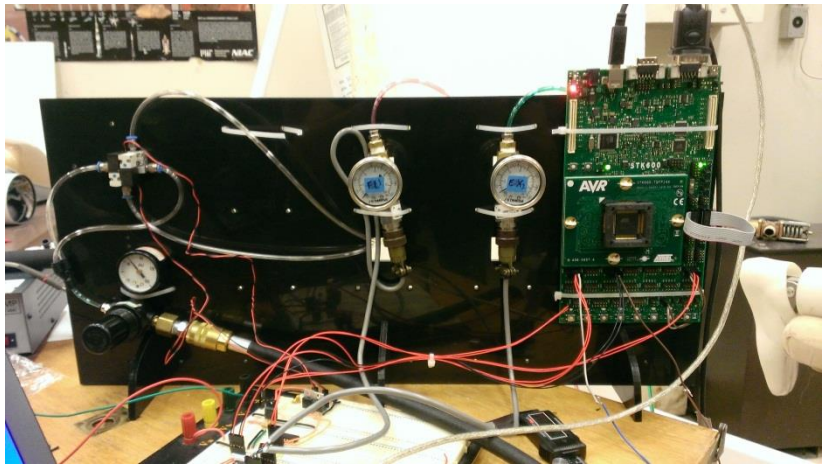

Robotic Testing

Knee Testing Observations
- Test with active control
- Torque generation adequate
- Simulated hysteresis curve

Hip Testing Observations
- Slow actuator response

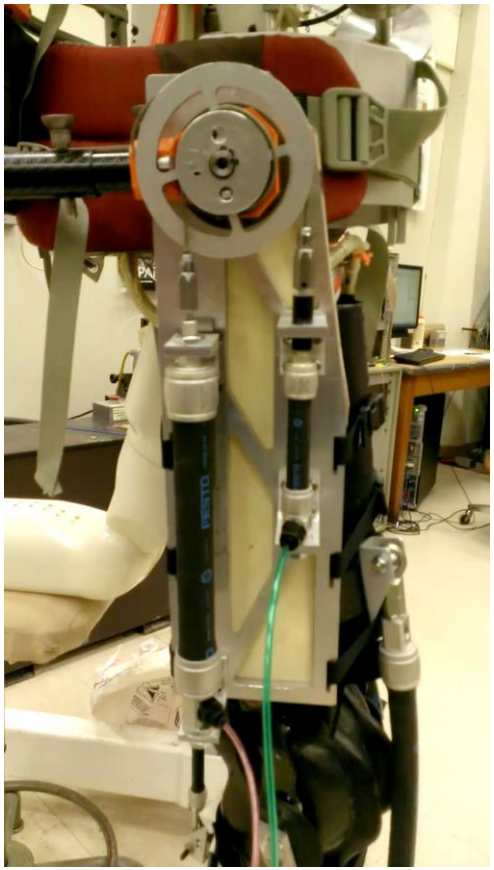

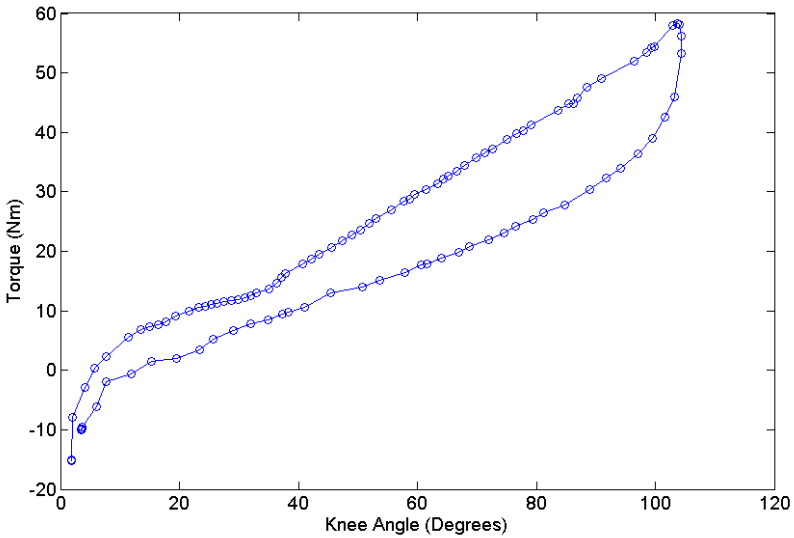

Preliminary knee flexion data

Testing Plan
- Programmed motions
  - Ankle
  - Knee
  - Hip A/A
  - Hip F/E
- RMS Error
- 0.2, 0.5, 1 Hz cycles
- 10 cycles

Display Design Pilot Study

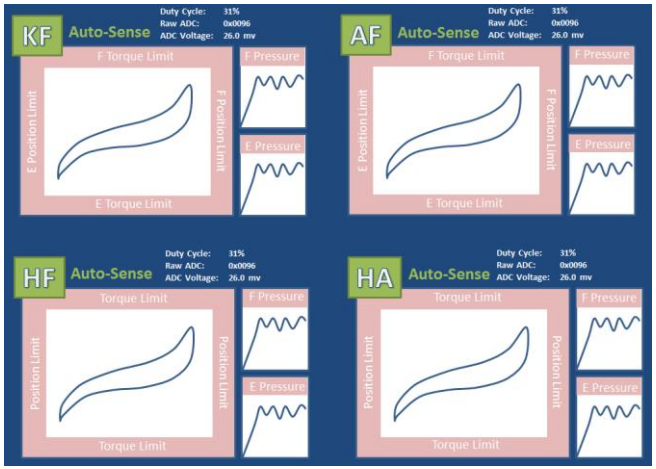

Display A

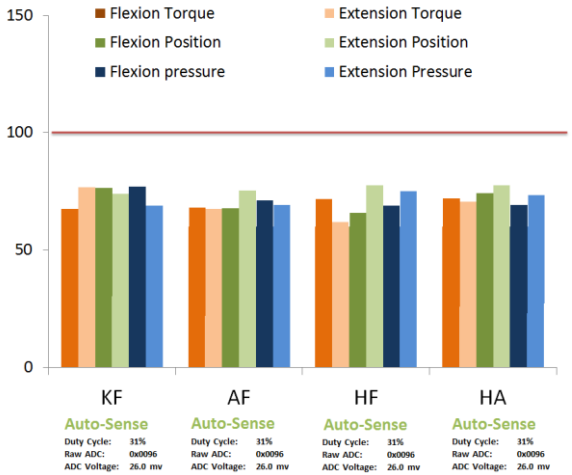

Display B

2 Displays
6 trials per display
10 Subjects
Starting display randomized

Paired Student's T-Test

H_0: $\mu_A = \mu_B$
H_A: $\mu_A \neq \mu_B$

$\alpha = 0.05$

Average Violation Response Time

Display A = 1.98 seconds
Display B = 0.60 seconds
Reject H_o Display B is better for response time (p = 0.0001)

Average Situational Awareness Score

Display A = 0.93
Display B = 0.85
Do not reject H_o Display A may be better for SA (p = 0.0957)

Conclusion

My contributions

- Designed and built a pneumatically actuated hip exoskeleton
  - Actuator optimization
  - Novel actuator application
  - Mechanical design and verification
- Designed and built a prototype ankle actuator
- Robotic testing on hip and knee components
- Design integration
- Preliminary display design and pilot study

Limitations

- Fitting the human in all cases
- Joint axis alignment for complex joints
- Quality of space suit joint torque data available
- Replicating suit feel as well as joint torque values
- Current system response time

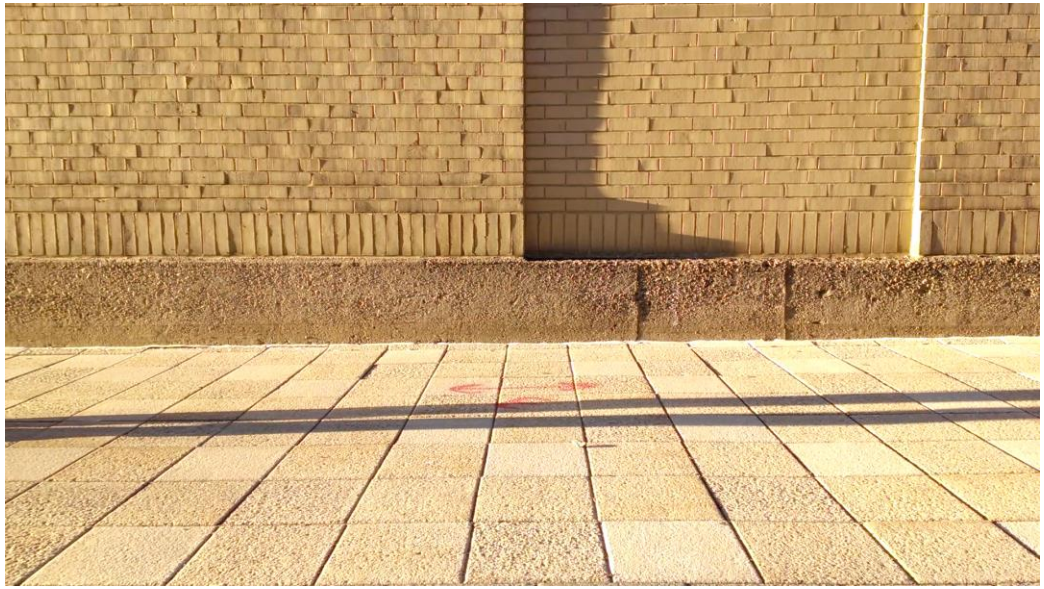

Video: Walking in EVA S3

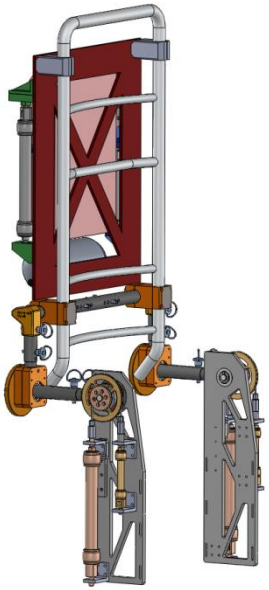

Future Work

Next steps

- Passive joint development
- Continued robotic testing
- Hip abd./add. advancements
- Control system enhancement

Potential work beyond Phase 2

- Human rated device
- Human performance testing

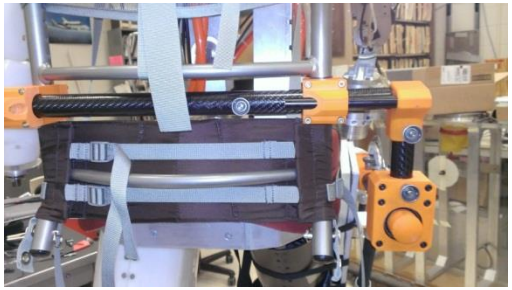

References

- Banala, S. K., K. Seok Hun, S. K. Agrawal and J. P. Scholz (2009). "Robot Assisted Gait Training With Active Leg Exoskeleton (ALEX)." Neural Systems and Rehabilitation Engineering, IEEE Transactions on **17**(1): 2-8.
- Bergamasco, M., B. Allotta, L. Bosio, L. Ferretti, G. Parrini, G. M. Prisco, F. Salsedo and G. Sartini (1994). An arm exoskeleton system for teleoperation and virtual environments applications. Robotics and Automation, 1994. Proceedings., 1994 IEEE International Conference on.
- Beyl, P., M. Van Damme, R. Van Ham and D. Lefeber (2008). Design and control concepts of an exoskeleton for gait rehabilitation. Biomedical Robotics and Biomechatronics, 2008. BioRob 2008. 2nd IEEE RAS & EMBS International Conference on.
- Brackbill, E. A., M. Ying, S. K. Agrawal, M. Annapragada and V. N. Dubey (2009). Dynamics and control of a 4-dof wearable cable-driven upper arm exoskeleton. Robotics and Automation, 2009. ICRA '09. IEEE International Conference on.
- Carignan, C., M. Liszka and S. Roderick (2005). Design of an arm exoskeleton with scapula motion for shoulder rehabilitation. Advanced Robotics, 2005. ICAR '05. Proceedings., 12th International Conference on.
- Carr, C. E. and D. J. Newman (2007). "Space Suit Bioenergetics: Cost of Transport During Walking and Running." Aviation, Space, and Environmental Medicine **78**(12): 1093-1102.
- Cherry, M. S., S. Kota and D. P. Ferris (2009). An elastic exoskeleton for assisting human running. Proc. of IDETC/CIE 2009, ASME 2009 Int. Design Engineering Technical Conferences & Computers and Information in Engineering Conf.
- Crocher, V., N. Jarrasse, A. Sahbani, A. Roby-Brami and G. Morel (2011). Changing human upper-limb synergies with an exoskeleton using viscous fields. Robotics and Automation (ICRA), 2011 IEEE International Conference on.
- Dollar, A. M. and H. Herr (2008). Design of a quasi-passive knee exoskeleton to assist running. Intelligent Robots and Systems, 2008. IROS 2008. IEEE/RSJ International Conference on.
- Duda, J. E., D. J. Newman, J. Hoffman, J. Peverill and G. P. Perusek (2011). The Use of Artificial Muscles in Space Suit Simulation for Partial Gravity Experimentation and Training.
- Gordon, K. E. and D. P. Ferris (2007). "Learning to walk with a robotic ankle exoskeleton." J Biomech **40**(12): 2636-2644.
- Hall, K. L., C. A. Phillips, D. B. Reynolds, S. R. Mohler and A. T. Neidhard-Doll (2012). "Pneumatic Muscle Actuator (PMA) Task-Specific Resistance for Potential Use in Microgravity Exercise." Aviation, Space, and Environmental Medicine **83**(7): 696-701.
- Heng, C., L. Zhengyang, Z. Jun, W. Yu and W. Wei (2009). Design frame of a leg exoskeleton for load-carrying augmentation. Robotics and Biomimetics (ROBIO), 2009 IEEE International Conference on.

References

- Holschuh, B., E. Obropta, L. Buechley and D. Newman "Materials and Textile Architecture Analyses for Mechanical Counter-Pressure Space Suits using Active Materials."
- Ivanova, G., S. Bulavintsev, R. Jee-Hwan and J. Poduraev (2011). Development of an Exoskeleton System for Elderly and Disabled People. Information Science and Applications (ICISA), 2011 International Conference on.
- Kazerooni, H., J. L. Racine, H. Lihua and R. Steger (2005). On the Control of the Berkeley Lower Extremity Exoskeleton (BLEEX). Robotics and Automation, 2005. ICRA 2005. Proceedings of the 2005 IEEE International Conference on.
- Kazerooni, H. and R. Steger (2006). "The Berkeley Lower Extremity Exoskeleton." Journal of Dynamic Systems, Measurement, and Control **128**(1): 14.
- Kousidou, S., N. Tsagarakis, D. G. Caldwell and C. Smith (2006). Assistive Exoskeleton for Task Based Physiotherapy in 3-Dimensional Space. Biomedical Robotics and Biomechatronics, 2006. BioRob 2006. The First IEEE/RAS-EMBS International Conference on.
- Lewis, C. L. and D. P. Ferris (2011). "Invariant hip moment pattern while walking with a robotic hip exoskeleton." J Biomech **44**(5): 789-793.
- Low, K. H., X. Liu, C. H. Goh and H. Yu (2006). "Locomotive Control of a Wearable Lower Exoskeleton for Walking Enhancement." Journal of Vibration and Control **12**(12): 1311-1336.
- Mao, Y. and S. K. Agrawal (2011). A cable driven upper arm exoskeleton for upper extremity rehabilitation. Robotics and Automation (ICRA), 2011 IEEE International Conference on, IEEE.
- Martin, L. (2008). HULC Exoskeletons Augment Strength and Endurance.
- NASA. (2013). "Active Response Gravity Offload System." Retrieved June 25, 2013, from http://www.nasa.gov/centers/johnson/engineering/integrated_environments/active_response_gravity/
- Perusek, G. P., J. K. DeWitt, P. R. Cavanagh, C. M. Grodsinsky and K. M. Gilkey (2007). "Zero-Gravity Locomotion Simulators: New Ground-Based Analogs for Microgravity Exercise Simulation."
- Schmidt, P. B., D. J. Newman and E. Hodgson (2001). Modeling Space Suit Mobility: Applications to Design and Operations. 31st International Conference on Environmental Systems, SAE International.
- Thomas, K. S. and H. J. McMann (2006). US Spacesuits, Springer.
- van Dijk, W., H. van der Kooij and E. Hekman (2011). A passive exoskeleton with artificial tendons: Design and experimental evaluation. Rehabilitation Robotics (ICORR), 2011 IEEE International Conference on.

Backup Slides

Conceptual Development

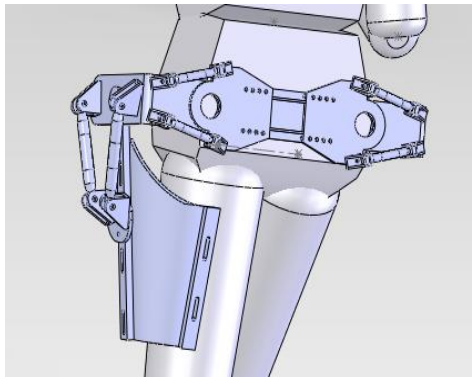

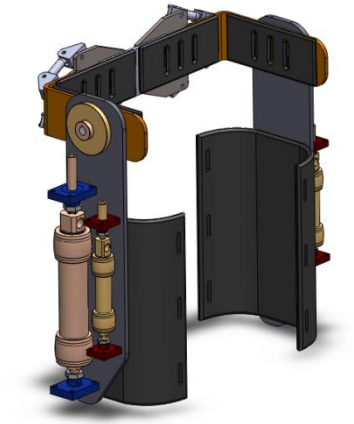

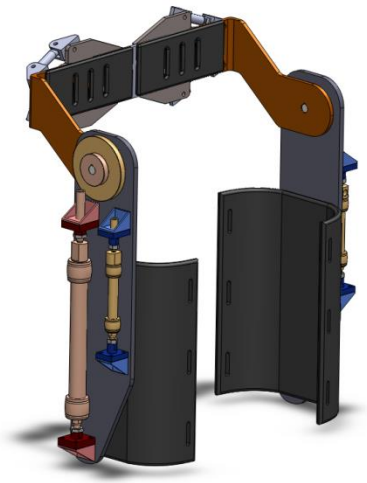

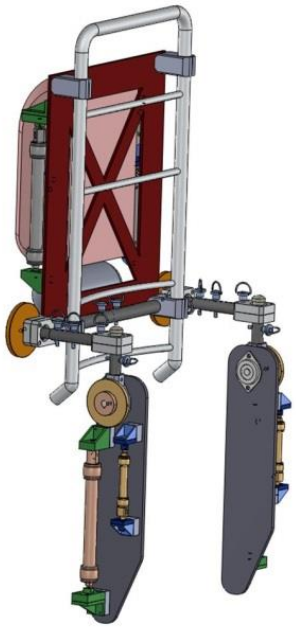

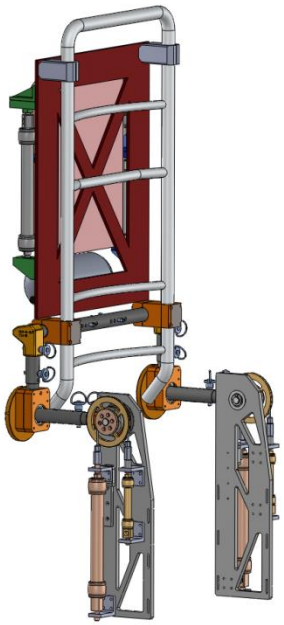

Fabricated Hip Joint

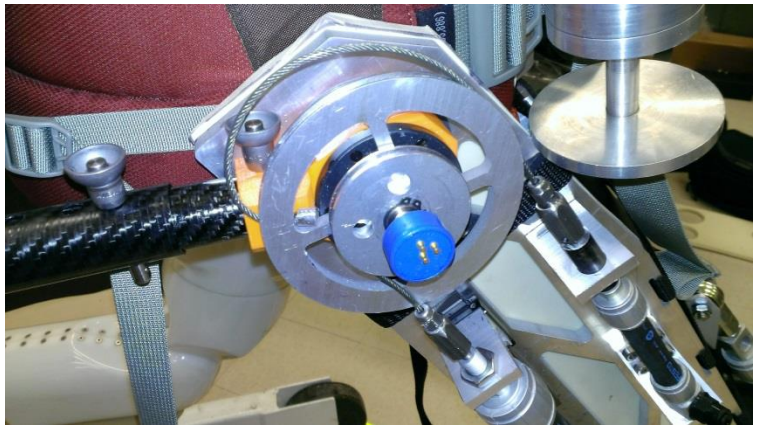

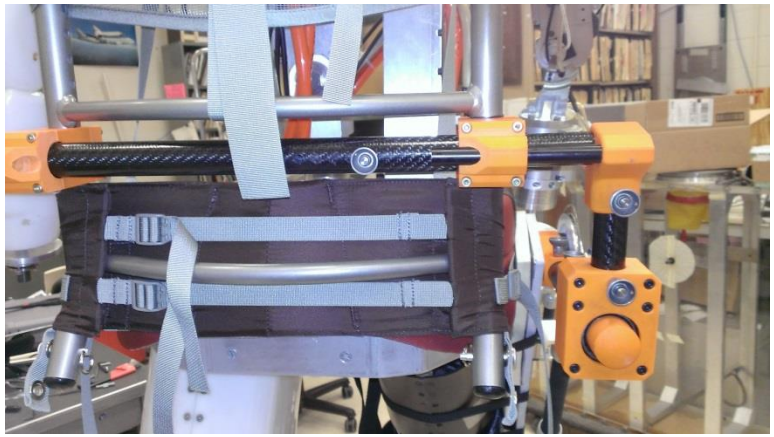

Methodology

1. Create joint torque database

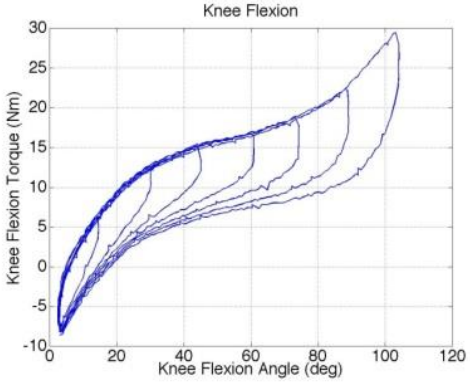

2. Prototype Design

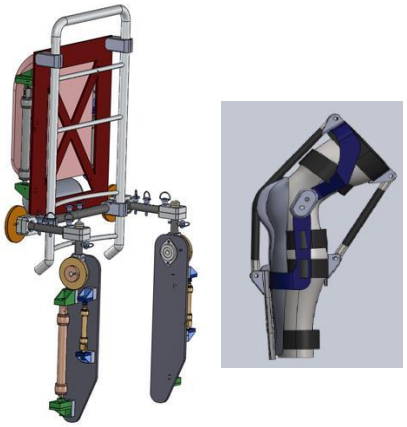

3. Develop Control System

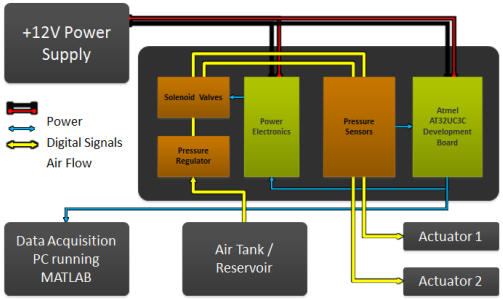

4. Build Prototype Joints

5. Robotic Testing

6. Modifications and system assembly

7. System verification