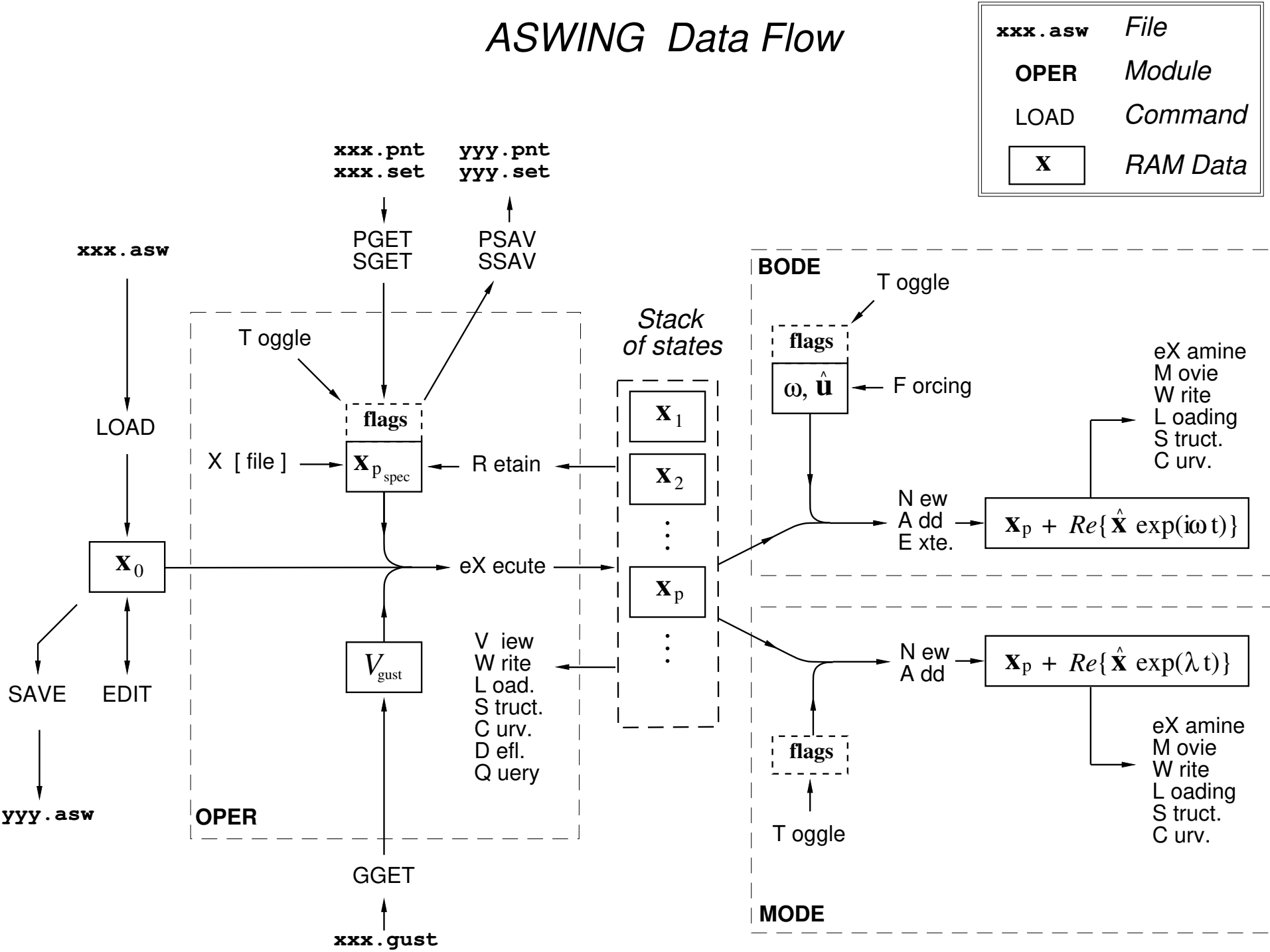ASWING Data Flow